Proceedings of GT2007
ASME Turbo Expo 2007: Power for Land, Sea and Air
May 14-17, 2007, Montreal, Canada

GT2007-27965

EVALUATION OF FAILSAFE PERFORMANCE FOR HOT GAS FILTRATION

Nikia Howard
Southern Company, Power Systems Development Facility
P.O. Box 1069, Wilsonville, Alabama 35186, United States, 205-670-5854, nhoward@southernco.com

Xiaofeng Guan
Southern Company, Power Systems Development Facility
P.O. Box 1069, Wilsonville, Alabama 35186, United States, 205-670-5891, xguan@southernco.com

Ruth Ann Martin
Southern Company, Power Systems Development Facility
P.O. Box 1069, Wilsonville, Alabama 35186, United States, 205-670-5088, rumartin@southernco.com

Robert S. Dahlin
Southern Research Institute, Power Systems Development Facility
P.O. Box 1069, Wilsonville, Alabama 35186, United States, 205-670-5068, x2dahlin@southernco.com

E. Carl Landham
Southern Research Institute, Power Systems Development Facility
P.O. Box 1069, Wilsonville, Alabama 35186, United States, 205-670-5990, x2landha@southernco.com

ABSTRACT

The Power Systems Development Facility (PSDF) is an engineering-scale demonstration facility of advanced coal-fired power systems and high-temperature, high-pressure gas filtration systems. The PSDF was designed at sufficient size so that system components can be evaluated and assessed in an integrated fashion to provide data for commercial scale-up. The PSDF is funded by the U.S. Department of Energy, the Electric Power Research Institute, Southern Company, Siemens Power Generation, Kellogg Brown & Root (KBR), Peabody Energy, Burlington Northern Santa Fe Corporation, and the Lignite Energy Council.

Coal gasification at the PSDF is achieved with the KBR Transport Gasifier. Particulate laden gas exiting the gasifier is filtered by a downstream particulate control device (PCD). The PCD is a hot-gas filter that can hold up to 91 filter elements arranged in two tiers, with 36 elements in the top cluster and up to 55 elements in the bottom cluster. More than 30 different types of sintered metal powder, metal fiber, and ceramic filter elements have been tested. As of October 2006, the longest exposure of an individual element was approximately 8550 hours, which was achieved with a Pall iron aluminide sintered metal powder element. The outlet particle loading during normal operation has been reliably maintained within the lower limit of measurement resolution (routinely less than 0.1 ppmw).

Downstream of each filter element is a failsafe device to prevent particulate leakage in the event of a filter element failure. The failsafe device is a small filter element or other type of particle collector and serves as a backup to the primary filter element. Demonstration of reliable failsafes is a critical factor in advancing hot gas filtration technology and increasing readiness for commercialization.

A failsafe test program was developed at the PSDF to identify failsafe devices that would provide satisfactory protection of a gas turbine from particulate damage. In tests that simulated the failure of a single filter element, both metallic and ceramic failsafe devices were typically able to produce an outlet particle loading below 0.1 ppmw after an initial period of seasoning. From the overall particulate collection efficiency point of view, the failsafes tested showed promising results of protecting a gas turbine from being damaged by particles in the event of a filter failure. This paper focuses on failsafe performance and effectiveness in preventing particulate leaking through the PCD in the event of a filter element failure.

KEYWORDS filter element, failsafe, collection efficiency

Copyright © ASME 2007

INTRODUCTION

Facility Description

The Power Systems Development Facility (PSDF) is an engineering scale demonstration facility of advanced coal-fired power systems and high-temperature, high-pressure gas filtration systems. The PSDF was designed at sufficient size so that system components can be evaluated and assessed in an integrated fashion to provide data for commercial scale-up. The PSDF is funded by the U.S. Department of Energy, the Electric Power Research Institute, Southern Company, Siemens Power Generation, Kellogg Brown & Root (KBR), Peabody Energy, Burlington Northern Santa Fe Corporation, and the Lignite Energy Council. The facility also supports clean coal technology programs to address environmental concerns associated with using fossil fuels for producing electricity, chemicals, and transportation fuels.

Coal gasification at the PSDF is based on KBR's Transport Gasifier which is an advanced circulating fluidized bed gasifier that uses either air or oxygen as an oxidant. The Transport Gasifier system and operational experience with the system have been discussed in detail in previous papers by Leonard et al [1], Smith et al [2], and Vimalchand et al [3].

The synthesis gas (syngas) that exits the gasifier is filtered by a Siemens Power Generation designed particulate control device (PCD). Experience with the PCD at the PSDF has been reviewed in previous papers by Davidson et al [4], Gardner et al [5], and Martin et al [6]. More recent experience with the PCD has been reviewed by Guan et al [7].

The PCD can hold up to 91 filter elements, which are arranged in two plenums (see Fig. 1). The syngas flows into the PCD through a tangential entrance, around a shroud, and through the filter elements. Particulate from the syngas collects on the outer surface of the filter elements and is removed by high pressure nitrogen back-pulsing. More than 30 different types of sintered metal powder, metal fiber, and ceramic filter elements have been tested. As of October 2006, the longest exposure of an individual element was approximately 8550 hours, which was achieved with a Pall iron aluminide sintered metal powder element. The outlet particle loading during normal operation can be reliably maintained within the lower limit of measurement resolution (routinely less than 0.1 ppmw).

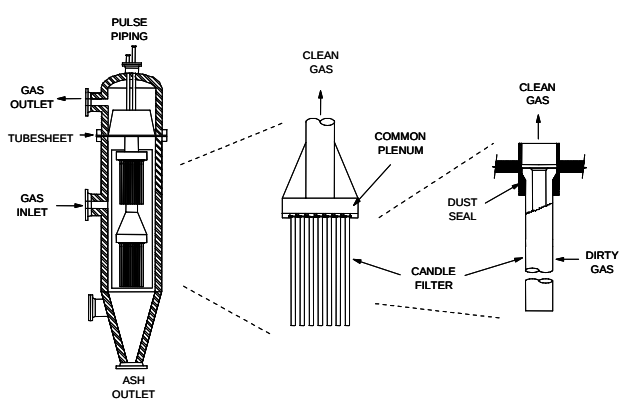

Figure 1. Schematic of Particulate Control Device

Failsafe Device

Above each filter element is a failsafe device to prevent particulate leakage in the event of a filter element failure. The failsafe acts as a safeguard device by plugging the gas passage in the event of a filter element failure. By plugging the gas passage, particulate leakage is prevented which eliminates erosion damage to gas turbines. A failsafe test program was developed at the PSDF to identify and test failsafe devices that would protect a downstream gas turbine. The ability of the failsafe to protect equipment is based on its collection efficiency (both overall and as a function of particle size), flow resistance, and reliability. The overall collection efficiency of the failsafe determines its ability to filter particulate from the syngas and to meet gas turbine requirements with respect to the outlet particulate loading. The fractional, or size-dependent, collection efficiency of the failsafe determines the ability to meet gas turbine specifications with respect to particle size. Some gas turbine specifications require tighter limitation for larger particles to the turbine inlet. At the PSDF, the amount of sample obtained at the outlet of the failsafe is generally too small to measure the particle-size distribution. Although some larger particles have been observed visually on the sampling filters, the nature of the particles in the syngas stream and their final particle size distribution after the combustion upstream of the gas turbine inlet are yet to be determined. Further, due to the test setup, it is impossible to completely eliminate the particle penetration through the filter elements and gaskets besides the failsafe tested. Therefore, some particles observed on the sampling filters may not represent the leaking particulate through the failsafe tested. Due to the unknown issues mentioned above, only the overall collection efficiency is addressed in this paper. The work will continue on size-dependent collection efficiency to meet turbine specifications. This is also an issue that needs to be resolved with the turbine suppliers.

The flow resistance of the failsafe as a function of gas flow or face velocity determines the effectiveness of back-pulse cleaning and provides important information on the flow characteristics of the failsafe. Another important parameter is the reliability of the failsafe, or the ability of the failsafe to withstand high-temperature syngas exposure, back-pulsing, etc for at least 8000 hours of continuous operation without significant reduction in structural integrity.

The test plan developed for the failsafe test program objectively evaluates the performance of each failsafe based on the overall collection efficiency, flow resistance, and reliability. The generalized test protocol includes an initial flow test (ΔP versus flow), measurement of collection efficiency at ambient conditions in a PCD cold flow unit, material exposure to clean syngas above a filter element in the PCD, measurement of overall collection efficiency under process conditions in the PCD, and long-term exposure tests in the PCD.

An initial flow test is performed to measure the pressure drop versus flow rate of the failsafe and to establish a baseline for comparison purposes. The failsafe is then installed in the PCD cold flow unit to determine its overall collection efficiency at ambient conditions. If the failsafe gives acceptable performance in the PCD cold flow unit, it is installed in the PCD above a filter element to test the effect of

Copyright © ASME 2007

syngas exposure on the material. Once it is proven that the material is capable of handling the syngas environment without degradation, the failsafe is tested in the PCD to determine its collection efficiency under various simulated failure modes.

To simulate the various failure modes, tests have been performed with various types of equipment configurations to simulate small, moderate and large leaks resulting from filter element failures. After these tests are conducted, the failsafe is installed in subsequent test runs to evaluate its long-term performance in the gasification environment.

Types of Failsafes

Five different types of failsafes have been used and tested at the PSDF: (1) a PSDF-designed failsafe (a metal platform and metal fiber media),(2) a Pall iron aluminide sintered powder fuse, (3) a Pall Dynalloy HR-160 metal fiber failsafe, (4) a Specific Surface ceramic honeycomb failsafe, and (5) a CeraMem ceramic honeycomb failsafe. The PSDF-designed failsafe is constructed of a metal fiber media from Pall and these failsafes consist of several different media types. The Pall iron aluminide fuse is a Pall commercial product constructed of sintered iron aluminide powder. The Pall Dynalloy failsafe is constructed of sintered HR-160 metal fibers. The filter media was inverted to promote plugging. The Specific Surface and CeraMem ceramic failsafes are both constructed of recrystallized silicon carbide in a honeycomb configuration. Compared to the sintered metal powder and the metal fiber failsafes, the ceramic failsafes can handle higher temperatures, and are less susceptible to corrosion and contain a larger filtration area due to the honeycomb structure. They are, however, more susceptible to damage from thermal shock and mechanical loads.

EXPERIMENTAL PROCEDURES

For each different type of failsafe, an initial flow test was performed using air at ambient temperature and pressure to determine the pressure drop across the failsafe. The data were used to generate a flow curve of the failsafe differential pressure versus face velocity.

After the initial flow test was completed, the failsafe was installed in the PCD cold-flow unit to determine the collection efficiency at ambient conditions. Modifications were made from the previous PCD cold-flow unit described by Gardner et al [8]. In the old PCD cold-flow unit, the gasification ash was blown over to the filter elements using a fluidized-bed feed system. The inlet particle loadings produced by this system were generally lower than the loadings measured at the inlet of the PCD. The old system also did not do a good job of matching the particle-size distribution entering the PCD. To address these limitations, the new PCD cold-flow unit was equipped with a gravimetric char feed and eductor system as shown in Fig. 2. The new configuration produces particle loadings and size distributions that better match those measured at the inlet of the actual hot-gas filter. The mean particle size of the char entering the PCD cold-flow unit was typically 12 to 16 μm, as measured in-situ using a Microtrac X-100 particle size analyzer. This was in good agreement with the mean particle size of 15 to 18 μm measured at the inlet to the actual PCD using the same measurement technique. The true particle density of the char is typically 1.8 to 2.2 g/cm^3, and the bulk density is typically about 0.3 to 0.4 g/cm^3.

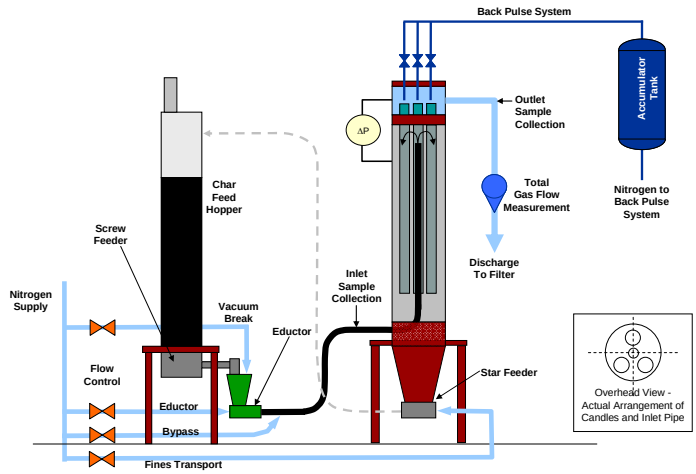

Figure 2. Diagram of Modified Cold-Flow Unit

As shown in Fig. 2, the major components of the modified PCD cold-flow unit are the char feed hopper, the gravimetric screw feeder and eductor system, an acrylic filter vessel containing up to three filter elements, and a nitrogen back-pulse system with accumulator tank. The cold-flow unit is operated in a manner similar to the PCD with back-pulse nitrogen used at specified time intervals to remove the accumulated solids from the filter elements and failsafes. The gasification char is typically fed at a rate of 15 to 20 lbs/hr (6.8 to 9.1 kg/hr). The failsafe collection efficiency is determined from the particulate loadings measured at the inlet and outlet of the PCD cold-flow unit using a modified version of EPA Method 17. A failsafe is usually tested with two iron aluminide filter elements, since these elements have negligible particulate emissions, and it can therefore be assumed that all of the particulate mass measured at the outlet is passed through the failsafe.

Failsafes that performed well in the PCD cold-flow unit were then installed in the PCD for further testing with syngas exposure. The failsafe material was evaluated to determine whether it could withstand the high temperature reducing environment of the process and if back-pulse cleaning was effective. Once the failsafe was proven acceptable at operating conditions, it was then tested under different filter element failure modes.

Three different types of filter element failures that produce small, moderate, or large particulate leaks have been simulated at the PSDF. To simulate a small particulate leak (e.g., a hairline crack in a filter element), a low solids concentration of approximately 300 ppmw was injected into the clean side of a filter element to the failsafe. The gasification ash was injected from a fluidized-bed feeder into the clean side of the filter element through a solids injection line. The pressure drop across the filter and failsafe device was monitored to determine how the failsafe responded to the

Copyright © ASME 2007

solids injection. The particulate loading at the PCD outlet was also monitored with an on-line particulate monitoring system and measured with a batch particulate sampling system.

For the moderate particulate leak, a solids concentration of approximately 5000 ppmw was injected into the filter element using a bypass system described by Gardner et al [8]. This setup used a bypass line to route the dirty syngas out of the PCD and into the clean side of the filter element. The dirty syngas flowrate was determined by a Venturi measurement, and pressure drop and particle loading were monitored by the same techniques used during the simulation of the smaller particulate leak.

Two separate procedures for simulating a large particulate leak have been used at the PSDF. The first procedure used a double-burst disk arrangement to introduce particulate flow to the failsafe. The burst disk device was installed below the failsafe onto the tubesheet of the PCD. The failsafe was exposed to particulate laden syngas by bursting the disks with high pressure nitrogen. The solids concentration for this test was equivalent to the inlet loading of the PCD. Although results were achieved with this system, it was difficult to prevent premature bursting of the burst disks. As a result, a new design that was simpler and easier to control was implemented. It was a direct injection system that consisted of a metal pipe, flexible metal hose, and a specially designed ball valve that was installed inside the filter vessel through a nozzle (see Fig. 3). The valve was designed so it could be controlled outside of the nozzle. The inlet to the ball valve was open to allow particulate to flow through the flexible hose and into the metal pipe that contained the failsafe device.

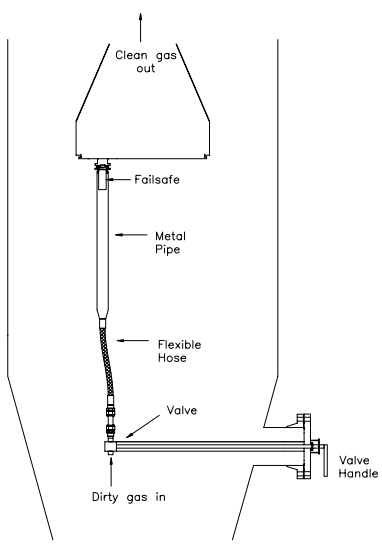

Figure 3. Diagram of the Valve Activated Failsafe Tester

When the valve was opened, particulate-laden syngas from the dirty side of the PCD was introduced to the failsafe, thus exposing the failsafe to the full particulate loading entering the PCD. The collection efficiency of the failsafe was determined during the testing to evaluate the failsafe performance with a high solids concentration.

RESULTS AND DISCUSSION

Initial Flow Tests

Initial flow test results of the failsafe pressure drop as a function of face velocity for four of the failsafe types are shown in Fig. 4. The face velocity for the failsafe was determined based on the filter element surface area. The Specific Surface failsafe was not flow tested and is not included in the graph. As shown in the graph, the CeraMem failsafe had the lowest flow resistance due to the larger filtration area provided by the ceramic honeycomb design. The Pall iron aluminide fuse had the highest flow resistance due to the relatively low porosity and tortuous flow path through the sintered grains of iron aluminide. The flow resistance of the PSDF-designed failsafe was essentially the same as the flow resistance of the Pall Dynalloy failsafe. This result is not surprising since both failsafes are made from the same metal fiber media.

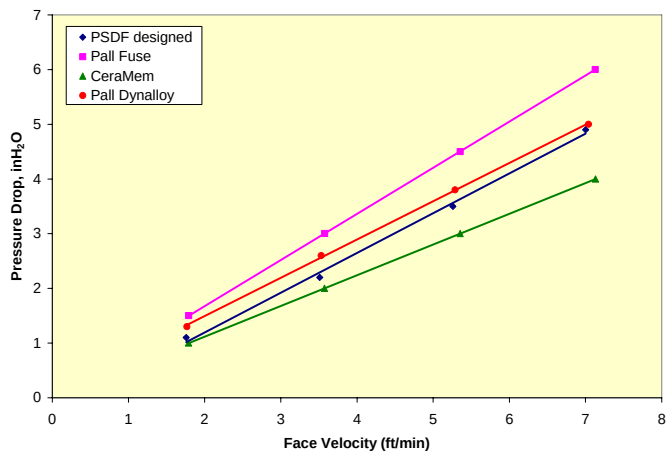

Figure 4. Pressure Drop Response of Failsafes as a Function of Face Velocity

Room Temperature Collection Efficiencies

The collection efficiencies for four of the five failsafes tested in the PCD cold-flow unit are given in Fig. 5. The collection efficiencies are plotted as a function of the cumulative testing time, since the collection of the failsafes was observed to improve with time. This effect is to be expected as the pores in the failsafes become plugged with ash and gradually provide more effective collection. In some cases, the collection efficiency seems to be leveling off at a maximum value, but the data for some of the tests suggest that the efficiency has not quite reached a steady value. Also, it should be noted that some of the tests were performed with the old PCD cold-flow unit (labeled old PPCD on graph), and some results were obtained with the modified PCD cold-flow unit (labeled new PPCD on graph). Because of the differences in test platforms and because some of the data have not reached a steady value, it is difficult to compare the performance of the failsafes in absolute terms. Nevertheless, the CeraMem ceramic honeycomb and the Pall iron aluminide fuse appear to be significantly better collectors than the metal fiber failsafes. This result is expected because of the tortuous flow path through the sintered powder materials.

Copyright © ASME 2007

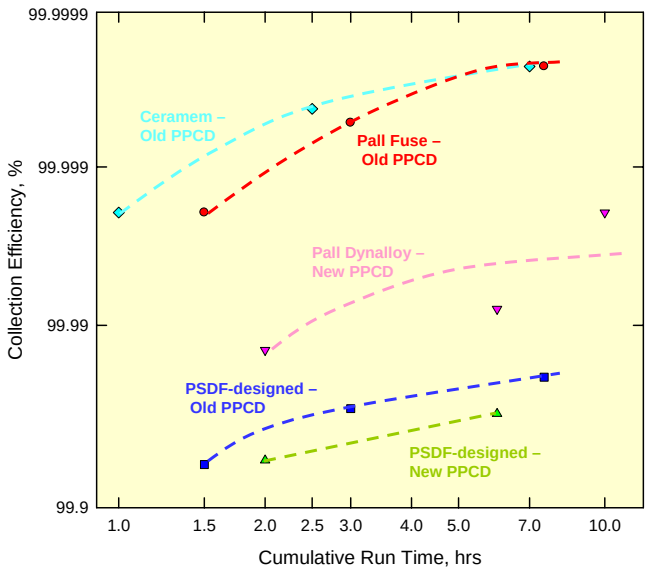

Figure 5. Collection Efficiencies of Failsafes as a Function of Cumulative Test Time in the PCD Cold Flow Unit

Exposure Tests

Each type of failsafe has been exposed in the PCD vessel above a filter element for one or more test runs. The Pall fuses were originally welded into the filter elements as an integral part of the element. The built-in fuses were tested for a total of 5816 exposure hours before it was noted that the flow characteristics of the used filter elements with the built-in fuses could not be recovered by pressure washing. The built-in fuses were then removed from the filter elements. When the filter elements were pressure washed with the fuses removed, the pressure drop was restored to acceptable values. It was noted that a reddish brown scale, which was later identified as iron oxide, had developed on the outer and inner surfaces of the built-in fuses that had been removed. It is not known exactly when the iron oxide formed because the fuses could not be inspected until they were removed. However, fuses that had as few as 2200 hours were also covered with the reddish brown scale. After the built-in fuses were removed from the filter elements, they were welded to holders so they could be installed as separate pieces in order to better track their appearance and performance. The fuses were then installed in other test runs and have now accumulated a total syngas exposure of 7158 hours. Some failures of the Pall fuses have been observed with cracks adjacent to welds and breakage due to corrosion. Modifications are currently underway to strengthen the welded junction. The modifications will be tested in future runs.

The PSDF-designed failsafe with has accumulated approximately 6840 hours. The HR-160 media type has performed well with no noticeable signs of degradation. These failsafes will continue to be used in future test runs and their long term performance will be evaluated.

The Pall Dynalloy metal fiber failsafe was first installed during the latest test run and has accumulated 870 hours of exposure time. Upon inspection, the failsafe did not show any signs of degradation. It will continue to be tested in upcoming test runs to track its long term-performance.

The CeraMem ceramic honeycomb failsafe has been used for over 2000 hours with no signs of plugging or media degradation.

The Specific Surface ceramic failsafe was exposed for 360 hours and was damaged, probably due to thermal and mechanical stresses during the back-pulse operation. At present, no further testing is planned with the Specific Surface failsafe.

Simulated Failure Modes

Low Solids Loading Test. The low solids loading (or small leak) test was performed for the PSDF-designed failsafe, the Pall iron aluminide fuse, the CeraMem ceramic honeycomb failsafe, and the Specific Surface ceramic failsafe. This test simulated the loading that would result from a hairline crack in the filter element. The results are given in Table 1. For the PSDF-designed failsafe, solids were injected for two hours, and the outlet was sampled over this time period. The outlet loading during this time period was less than 0.1 ppmw. The pressure drop across the failsafe was monitored during solids injection. After approximately ten minutes, the failsafe pressure drop tracked the tubesheet pressure drop and the filter pressure drop under the failsafe went to zero as shown in Fig. 6, indicating that the failsafe plugged within this time period.

Table 1. Test Results for Low Solids Loading

Test Date	Failsafe Type	PCD Outlet Loading (ppmw)	Solids Injection (hours)
6/20/02	PSDF-designed	< 0.1*	2
6/13/02	Pall Fuse	0.33	2
9/24/02	CeraMem	0.46	2
9/26/02	Specific Surface	0.45	2

* This test result is inconsistent with other values and may have resulted from a plugged sampling line.

Copyright © ASME 2007

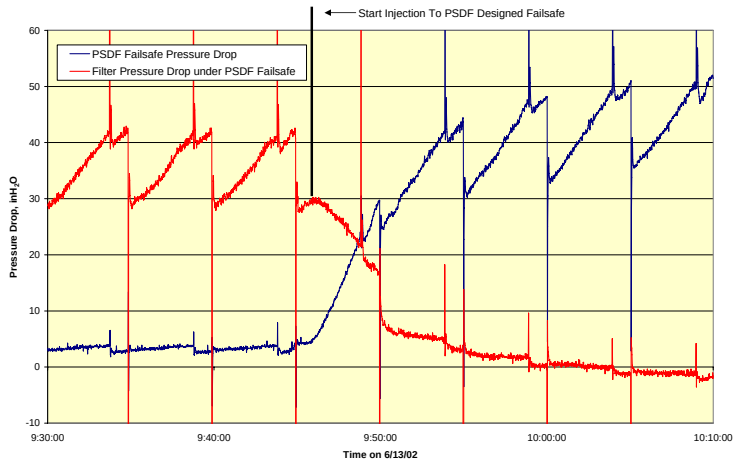

Figure 6. PSDF-designed Failsafe Pressure Drop Response during Low-Level Solids Injection [8]

The Pall iron aluminide fuse was tested in the same manner for about 2 hours. The outlet loading during this time period was approximately 0.33 ppmw. Similar to the PSDF-designed failsafe, the pressure drop followed the tubesheet pressure drop indicating plugging, but the Pall iron aluminide fuse did not plug completely as PSDF-designed failsafe. The filter pressure drop under the Pall iron aluminide fuse still showed 10 to 15 inH_2O (2.5 to 3.7 kPa) after 30 minutes of injection as shown in Fig. 7. This indicated that the fuse was not completely plugged and gas was able to pass through the fuse.

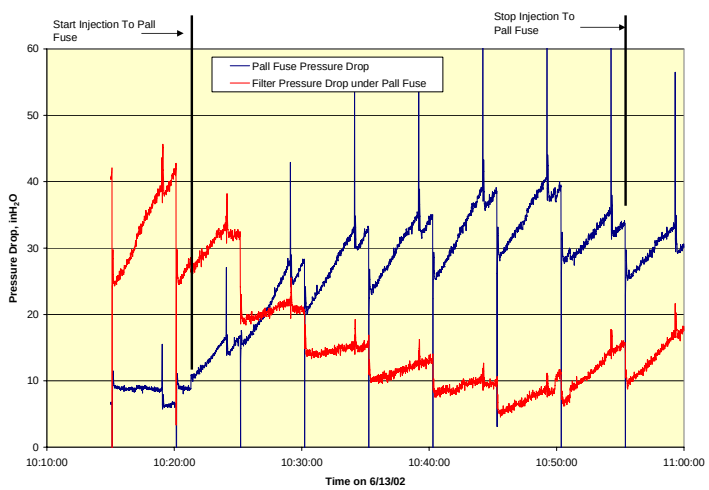

Figure 7. Pall Fuse Pressure Drop Response during Low-Level Solids Injection [8]

The CeraMem ceramic failsafe was also tested and initial results produced an outlet loading of 0.46 ppmw which was slightly higher than the Pall fuse. The failsafe was inspected after the dust injection testing and a small amount of ceramic material was missing from the honeycomb filtration media. The media was most likely damaged as a result of insufficient support in the design and could explain why the outlet loading was higher. The structural integrity of this failsafe was not acceptable and was modified to further enhance the design.

The Specific Surface failsafe was tested and gave an outlet loading of 0.45 ppmw during the 2 hour injection test, which was similar to the CeraMem failsafe. The Specific Surface failsafe also failed during the test run with loss of material from the honeycomb media. It was believed to have failed as a result of the back-pulse operation. Attempts were made to strengthen the design of the Specific Surface failsafe, but were unsuccessful so no further testing of the material was performed.

Moderate Solids Loading Tests. The moderate solids loading (or moderate leak) test was performed for the PSDF-designed failsafe, the Pall iron aluminide fuse, and the CeraMem ceramic honeycomb failsafe. This test simulated the outlet loading that would be produced from a 0.25-in. (6.35 mm) hole in the filter element. The concentration of solids to the failsafe was approximately 5000 ppmw. The results from the test are given in Table 2.

For the PSDF-designed failsafe, initial results from the first test showed an outlet loading of approximately 0.16 ppmw after two hours of injection. Considering the higher inlet loading in this test, the PSDF-designed failsafe actually gave higher collection efficiency in this test than in the low solids loading test. However, it was apparently not able to completely plug within two hours. This failsafe was tested again to see if it would plug over a longer period of solids injection. The first test produced an outlet loading of 0.18 ppmw after 27 hours of injection. After 48 hours of solids injection, the outlet loading decreased from 0.18 to less than 0.1 ppmw, indicating essentially complete pluggage.

Initial results from the Pall iron aluminide fuse showed an outlet loading of approximately 0.15 ppmw after two hours. Since the failsafe did not plug, it was also tested again for a longer time period. An outlet loading of less than 0.1 ppmw was achieved after 25 hours of injection and confirmed in a second test after 49 hours of injection. This result suggests that the time required for the Pall iron aluminide fuse to plug is slightly less than the time required for the PSDF-designed failsafe.

Table 2. Test Results for Moderate Solids Loading

Test Date	Failsafe Type	PCD Outlet Loading (ppmw)	Solids Injection (hours)
4/16/03	PSDF-designed	0.16	2
4/18/03	Pall Fuse	0.15	2
7/2/03	PSDF-designed	0.18	27
7/11/03	PSDF-designed	< 0.1	48
7/8/03	Pall Fuse	< 0.1	25
7/9/03	Pall Fuse	< 0.1	49
2/27/04	Pall Fuse	< 0.1	1
2/27/04	CeraMem	3.34	1
2/28/04	CeraMem	< 0.1	4
4/24/04	CeraMem	0.17	4

Copyright © ASME 2007

The CeraMem ceramic honeycomb failsafe did not perform as well as the other failsafes during initial testing. The first injection test for moderate loading showed 3.34 ppmw after only one hour of solids injection. The failsafe was injected for a longer period of time to see if it would eventually plug. After 4 hours of injection, the outlet loading from the CeraMem failsafe decreased to less than 0.1 ppmw. It is not known exactly why the initial outlet loading was so much higher than the other failsafes and higher than the results obtained from the low solids loading test. It most likely resulted from particulate leaking through the packing material between the media and the stainless steel housing. This ceramic failsafe was tested after it had been modified from previous testing. Repackaging the material could have produced inadequate support of the media.

High Solids Loading Tests. The high solids loading (large leak) test was performed for the Pall iron aluminide fuse, the CeraMem ceramic honeycomb failsafe and the Pall Dynalloy failsafe with inverted filter media. This test simulated a catastrophic filter element failure in which the concentration of solids to the failsafe was approximately 10,000 to 18,000 ppmw (about the same concentration as the inlet loading to the PCD). Test results from the high solids loading test are given in Table 3.

Table 3. Test Results for High Solids Loading

Test Date	Failsafe Type	PCD Outlet Loading (ppmw)	Exposure Time (hours)	Inlet Loading (ppmw)
8/3/04	Pall Fuse	< 0.1	6	14,000
10/29/04	CeraMem	< 0.1	7	18,100
11/18/05	Pall Fuse	< 0.15	1	10,300
11/18/05	Pall Fuse	< 0.1	3	N.M.
9/1/06	Pall Dynalloy	0.45	1	9600
9/6/06	Pall Dynalloy	0.30	1	11000
9/7/06	Pall Dynalloy	< 0.1	26	N.M.

N.M. indicates inlet loadings that were not measured

The Pall fuse was first tested using the double-burst disk test method. The disks were burst during the first attempt, but the pressure indication was not clear so no outlet sampling was done during the first hour. After it was concluded from the pressure measurements that the failsafe was indeed exposed, outlet sampling was performed. The outlet loading was less than 0.1 ppmw. Testing of the Pall fuse was performed again using the valve-activated failsafe tester. This method was much easier to control and produced promising results. Sampling was performed during the first hour of exposure, and the outlet loading from the Pall fuse was approximately 0.15 ppmw. Sampling was performed again after three hours of exposure and the outlet loading was less than 0.1 ppmw.

The CeraMem ceramic honeycomb failsafe was tested under a high solids concentration using the double-burst disk test method. Unfortunately, the double-burst disk test device opened prematurely, and the opening was not detected until several hours later. Outlet sampling was conducted after confirming that the failsafe was exposed and results were obtained for seven hours of exposure time. The outlet loading from the CeraMem failsafe was less than 0.1 ppmw indicating that the ceramic failsafe was very effective in preventing particulate from leaking through the outlet of the PCD.

Testing of the Pall Dynalloy failsafe was successfully performed during the most recent test run. Sampling during the first hour of testing indicated an outlet loading of 0.45 ppmw. A few days later, the test was conducted again for one hour and the outlet loading was 0.30 ppmw. The valve was left open to obtain long term exposure data. The outlet loading continued to drop and subsequent sampling showed that the outlet loading remained near or below 0.1 ppmw from 26 hours after exposure until the end of the run.

CONCLUSIONS

All of the failsafes tested at the PSDF show promising results and performed satisfactorily. The elevated particle penetration only occurs during the initial plugging process with a short time period. The plugging time depends on the type of failsafe design, its porous media structure, and particulate loading conditions. After the failsafe is plugged, the overall particulate loading in the PCD outlet stream is generally below the sampling system's lower detection limit, which has been achieved before the simulated filter element failure. Even in the initial plugging period, the particulate collection efficiencies are potentially high enough to meet the particulate concentration limits specified by the gas turbine manufacturers.

Because of the effect of temperature and syngas constituents on particulate properties, the collection efficiencies measured in the PCD cold-flow unit may not match those obtained in the actual PCD. Nevertheless, the magnitude of the differences measured in the cold-flow unit are large enough to conclude that the Pall iron aluminide sintered powder fuse and the CeraMem ceramic honeycomb failsafe have better particulate collection efficiencies than do the Pall Dynalloy metal fiber failsafes during the initial plugging period.

Despite the lower collection efficiency of the metal fiber failsafes during the initial plugging period in the PCD cold-flow unit tests, the test results from the actual PCD suggest that even the metal fiber failsafes can achieve a solids loading below 0.1 ppmw after plugging period when only a single element out of 72 elements fails. With the new concept of further promoting the plugging mechanism, the Pall Dynalloy metal fiber failsafe appears to offer higher collection efficiency than does the PSDF-designed failsafe.

This paper summarizes the failsafe testing at the PSDF with an emphasis on the overall particulate collection efficiency. The test program at the PSDF continues to identify and resolve various issues with failsafe mechanical integrity, material degradation, long-term performance, and particle size distribution and its effect on downstream equipment.

ACKNOWLEDGEMENTS

The authors gratefully acknowledge the financial and technical support provided by the U.S. Department of Energy (DOE) under contract DE-FC21-90MC25140 and the other project participants who have provided funding and technical assistance for the work at the PSDF. The DOE Project Manager is Dr. Ron Breault. The funding partners include

Copyright © ASME 2007

Electric Power Research Institute (EPRI), Southern Company Services; Kellogg, Brown, and Root; Siemens Power Generation, Peabody Energy, Burlington-Northern Santa Fe Corporation, and the Lignite Research Council.

The authors would also like to thank Rick Range, Andrew Gorin, and John Sawyer of Pall Corporation who have worked closely with the PSDF staff in understanding the performance of the Pall failsafes and in developing improved materials and designs for these devices. We are also grateful to Bruce Bishop from CeraMem Corporation and Andrew Jeffery from Specific Surface who have worked with PSDF engineers in the development and testing of the ceramic honeycomb failsafes.

REFERENCES

[1] Leonard, R., T. Pinkston, L. Rogers, R. Rush, and J. Wheeldon. "The PSDF – Commercial Readiness for Coal Power Revisited" presented at the 19th Annual Pittsburgh Coal Conference. Pittsburgh, Pennsylvania. September 23-27, 2002.

[2] Smith, P.V., P. Vimalchand, T.E. Pinkston, G. Henningsen, and J.L. Longanbach. "Transport Reactor Combustor and Gasifier Operations" *In: Proceedings of the 8th International Energy Forum (Energex 2000)*. Las Vegas, Nevada. July 23-28, 2000.

[3] Vimalchand, P., R.F. Leonard, and T.E. Pinkston. "Power Systems Development Facility: Operation of a Transport Reactor System with a Westinghouse Candle Filter" presented at the Advanced Coal-Based Power and Environmental Systems '98 Conference. Morgantown, West Virginia. July 21-23, 1998.

[4] Davidson, M.D., R.S. Dahlin, E.N. Galloway, X. Guan, H.L. Hendrix, E.C. Landham, and P.T. Scarborough, Power Systems Development Facility: High-Temperature, High-Pressure Filter System Operations in a Combustion Gas, *Proceedings of the 15th International Conference on Fluidized-Bed Combustion*, American Society of Mechanical Engineers, New York, New York (1999).

[5] Gardner, B.F., M.D. Davidson, X. Guan, H.L. Hendrix, B.J. Shirley, R.S. Dahlin, E.C. Landham, and J.D. Spain, Commercial Readiness of Hot-Gas Filtration for Pressurized Combustion, *Proceedings of the 16th International Conference on Fluidized-Bed Combustion*, American Society of Mechanical Engineers, New York, New York (2001).

[6] Martin, R.A., X. Guan, B.F. Gardner, J.D. Spain, E.C. Landham, and R.S. Dahlin, High- Temperature, High-Pressure Filtration in Gasification Operation, *Proceedings of the 5th International Symposium on Gas Cleaning at High Temperature*, Morgantown, West Virginia (September 18-20, 2002).

[7] Guan, X., B. Gardner, R.A. Martin, and J. Spain, Demonstration of Hot-Gas Filtration in Advanced Coal Gasification System, *6th International Symposium on Gas Cleaning at High Temperatures*, Osaka, Japan (October 20-22, 2005).

[8] Gardner, B., Guan, X., Martin, R., Spain, J., 2005, "Hot Gas Filtration Meeting Turbine Requirements for Particulate Matter," ASME Paper No. GT2005-68925.

Copyright © ASME 2007