Project Title:

Evaluation of Solid Sorbents as a Retrofit Technology for CO_2 Capture from Coal-Fired Power Plants

Technology Area:	**Technology Maturity:**
Post-Combustion Sorbents	1 kW Pilot, 0.05 Tonnes of CO_2/Day, Real Flue Gas

Primary Project Goal:

To assess the viability and advance the development of solid sorbent carbon dioxide (CO_2) capture technology for retrofitting coal-based power plants.

Technical Goals:

- Identify and characterize promising sorbents from multiple developers.
- Design, fabricate, and demonstrate a 1-kW slipstream pilot (0.14 m^3/min ≈ 5 [acfm]).
- Complete a technology survey to identify equipment applicable to commercial-scale sorbent processes.
- Complete a preliminary conceptual design and cost estimate for a CO_2 capture process in a 500-MW plant.
- Complete a preliminary design for a 1-MW pilot plant incorporating the new capture process.

Technical Content:

The CO_2 sorbents being investigated can be used in a temperature swing adsorption (TSA) process. Sorbents included in the investigation will be procured from various CO_2 solid sorbent developers. Evaluation of the sorbents will be based on the availability of raw material, manageable disposal costs (low toxicity), CO_2 working capacity, specific heat, temperature change required for regeneration, interaction with flue gas components (sulfur oxides [SO_X] and nitrogen oxides [NO_X]), and adequate strength to minimize wear on the sorbent. Table 1 displays the key properties used to evaluate CO_2 sorbents.

Table 1: Key Properties Used to Evaluate CO_2 Sorbents

Physical Property	Current Range	Goal
Sorbent Particle Size (mm)	Highly varied and controllable	~1 – 10
Sorbent Surface Area (m^2/g)	0.5 – 3,000	0.5 – 1,500
Sorbent Active Component Concentration (wt%)	5 – 100	10 – 100
Shape of Sorbent	Varied	Spherical
Density of Sorbent (g/cm^3 [lb/ft^3])	0.6 – 2.6	Dependant on contractor design
Mechanical Strength	Not reported	Dependant on contractor design
Attrition Fines: Form, Processing, and Fate	Not reported	To be determined

The lab-scale tests consist of <3 grams of the adsorbents exposed to simulated flue gas and then regenerated by a temperature swing. For the adsorption step, the simulated flue gas is 55°C (130°F) with oxygen (O_2) and CO_2 concentrations of 4% and 12%, respectively. The moisture level can be varied (usually 0% or 90% relative humidity). The regeneration temperature is between 65°C to 250°C (150°F to 480°F). After the adsorbents are tested at laboratory scale, the most positively rated adsorbents will be tested at 1-kW pilot scale. Table 2 displays a matrix of the adsorbents tested and the assessment results from the initial laboratory screening.

Table 2: Test matrix of the adsorbents and results from the initial laboratory screening

	Supported Amines	Carbonates	Carbon	Zeolites
Working Capacity	High	High	Low	Low
Thermal Stability	Low	High	High	High
Theoretical Regeneration Energy (vs. aqueous MEA)	Lower	Higher	Similar	Higher
Issues	SO_2	SO_2	Working Capacity	Moisture

After the initial laboratory screening of the sorbents, larger quantities (~90 kg [200 pounds]) of the best materials will then be evaluated in a 1-kW slipstream pilot. Testing is scheduled at three coal-fired power plants burning bituminous, subbituminous, and lignite coals. This flue gas is expected to have temperatures of 60°C (140°F), a CO_2 concentration of 10% to 12%, saturated moisture, oxygen (5% to 6%), NO_X (100 ppm to 120 ppm), SO_2 (50 ppm to 250 ppm). Flue gas pre-treatment equipment will allow ADA to control the SO_2, moisture, temperature, and pressure of the flue gas entering the reactor. The 1-kW pilot tests will be parametric in nature to characterize sorbent performance under a range of realistic conditions. In addition, during the parametric tests sufficient process and sorbent performance information will be collected to complete a preliminary, 500-MW conceptual process design and economic evaluation. The following diagram represents the circulating transport reactor that will be employed for the 1-kW pilot tests. A photo of the equipment is also shown.

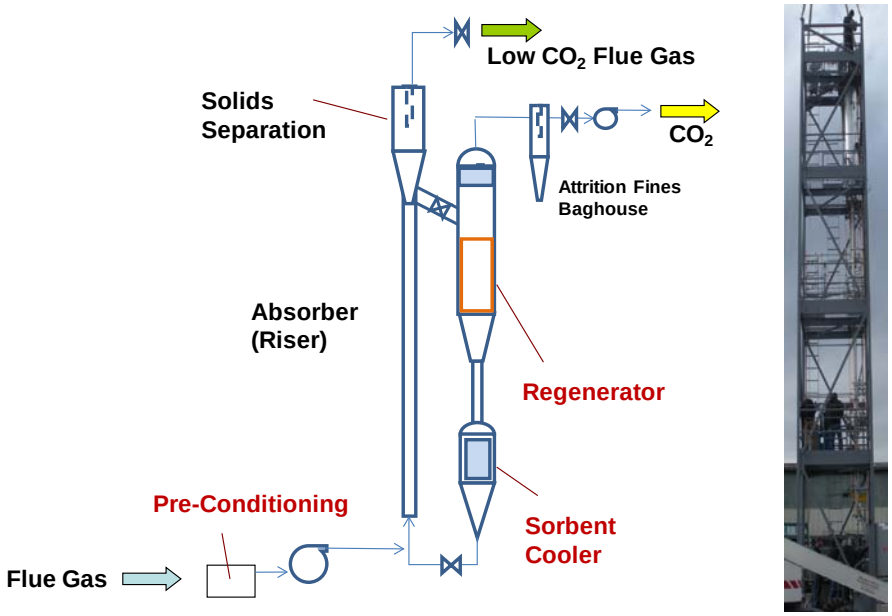

Figure 1: Diagram and Image of Circulating Transport Reactor

Various process concepts will be evaluated for their applicability to post-combustion CO_2 capture using TSA. A preliminary, 500-MW conceptual design will be developed for the process that meets several technical requirements including criteria set for regeneration and solids handling, engineering maturity, and favorable projected capital and operating costs. Only those process concepts that can reasonably meet a commercialization target of 2020 were considered mature enough to progress to the design phase under this project. Preliminary conceptual engineering will include process modeling to determine the cost implications for direct and indirect heating and cooling of the sorbents, capital and operating cost estimates, and preliminary sizing of major equipment.

Many of the research and development targets that will be considered include those listed in Table 3.

Table 3: Process Parameters for Solid Sorbent

	Parameter	Current R&D Value	Target R&D Value
Sorbent Properties	Type of sorbent	Supported amine, activated carbon	N/A
	Heat of reaction (kJ/mole CO_2)	~ -60	-60
	CO_2 loading/working capacity, wt.%	14	≥ 15 (stable)
	Surface area, m^2/g	20 – 1,500	TBD
	Particle density, g/cm^3	Pending	TBD
	Bulk density, g/cm^3	0.3 to 0.7	TBD
	Particle size (μm)	30-100	30-100
	Heat capacity (kJ/kg·K)	1.4	0.8 – 1.3
	Thermal stability, °C	100	150
	Hydrothermal stability, °C	Not measured	150
Process Configuration	Attrition rate (fluidized bed), %/year	Not measured	≤ 50
	Cycle time, minutes	Depends on contactor	≤30
	Pressure drop, psia	0.54	0.5
Operating Conditions	Adsorption temperature, °C	55	55
	Adsorption pressure, atm.	1	1
	CO_2 capture efficiency, %	100 (Lab-scale)	90
	Regeneration method	Temperature swing	Temperature swing
	Regeneration temperature, °C	100	100
	Regeneration pressure, atm.	1 (Lab-scale total pressure)	1
Heat Integration	Required regeneration steam temperature, °C	Not measured	120
Miscellaneous	Sorbent make-up rate, kg/kg CO_2	Will be measured for 1 kW pilot	≤0.0005
Product Quality	CO_2 purity, %	20% (Lab-scale with N2 purge)	≥95
	N_2 concentration, %	Not measured	≤5
	Other contaminants, %	Not measured	≤1
Process Performance	Parasitic Electricity requirement[1], $KJ/kgCO_2$	Not measured	≤20
	Heat requirement, $kJ/kgCO_2$	Not measured	≤1,500
	Total energy (electricity equivalent)[2], $kJ/kgCO_2$	Not measured	≤1,800

1. Does not include makeup power or CO_2 compression.
2. Includes compression (estimated at 0.1 MW/ton CO_2).

Technology Advantages:

- Reduction in the regeneration energy requirements by minimizing heat input (no liquid solvent is involved).
- High sorbent working capacities have been demonstrated (lab-scale).
- Fundamental sorbent chemistry is well-know (e.g., amine).
- Components of process equipment are mature (e.g., circulating fluidized bed).

R&D Challenges:

- Minimizing physical attrition.
- Long-term cyclic stability (including the effect of flue gas constituents).
- Minimize equipment footprint.
- Minimize operating and maintenance costs (e.g., minimize moving parts).
- Reduce compression to minimize costs.

Results To Date/Accomplishments:

Lab-Scale Sorbent Screening Results

- Completed laboratory and field tests.
- Completed initial evaluations of the effect of flue gas constituents on sorbent performance.
- Measured working capacity (zero to 14 wt%).
- Measured consistent performance (>260 cycles tested).
- Measured the temperature change required between capture and regeneration (15°C to 195°C).
- Calculated the theoretical regeneration energy (1620 kJ/kg CO_2 to 93,000 kJ/kg CO_2).

1-kW Slipstream Pilot

- Designed and fabricated a 1-kW pilot contactor.
- Installed at Field Site 1.
- Checkout operations underway.
- Procured pilot-scale quantities of three sorbents.
- Produced supported amine sorbents using techniques applicable to commercial-scale manufacturing.

Commercial-Scale Equipment

- Completed a technology survey of equipment and process options.
- Assessed merits of various technologies for this application.
- Completed a high level economic comparison of economic options.
- Completed a final technology selection that will be used for a preliminary 500-MW conceptual design.
- Preliminary assessment of upstream and downstream balance-of-plant impacts.

Next Steps:

- Complete fundamental laboratory analysis of most promising sorbents (e.g., crush strength, heat of adsorption, single and multiple gas isotherms, hydrothermal stability, etc.).
- Conduct parametric field tests at three test sites.
- Assess full-scale equipment design criteria based on lab and 1-kW pilot results.
- Develop capital and operating costs for the selected technology.
- Conduct cursory life cycle CO_2 emissions estimate.
- Develop a preliminary 500-MW conceptual plant design and plant cost estimate.

Available Reports/Technical Papers/Presentations:

Quarterly Technical Reports to the DOE from 4Q08 to 4Q09.

Sjostrom, S.; Krutka, H.; Evaluation of Solid Sorbents as a Retrofit Technology for CO_2 Capture, *Fuel*, accepted for publication, November, 2009.

Sjostrom, S.; Campbell, T.; Krutka, H.; O'Palko, A. *Solid Sorbents as a Retrofit CO2 Capture Technology: Results from Pre-Pilot Field Testing*, Air Quality VII Conference, Arlington, Virginia, October 27, 2009. (Presentation and Paper).

Evaluation of Solid Sorbents as a Retrofit Technology for CO_2 Capture from Coal-Fired Power Plant - Annual NETL CO_2 Capture Technology for Existing Plants R&D Meeting - March 2009.

Results from Lab and Field Testing of Novel CO_2 Sorbents for Existing Coal-Fired Power Plants- Power Plant Air Pollutant Control "Mega" Symposium in Baltimore, Maryland - August 2008.

Summary of Post-Combustion CO_2 Capture Technologies for Existing Coal-Fired Power Plants, Air & Waste Management Association Annual Conference, paper #808, Portland, OR, June 24-26, 2008.

Contract No.: DE-NT0005649	**NETL Project Manager:** Andrew O'Palko Andrew.Opalko@NETL.DOE.GOV
Principal Investigator: Sharon M. Sjostrom ADA-ES, Inc. sharons@adaes.com	**Partners:** Jenike & Johanson Stantec