Project Title:

CO_2 Capture from Flue Gas by Phase Transitional Absorption

Technology Area:	**Technology Maturity:**
Post-Combustion Solvents	Laboratory-Scale, Simulated Flue Gas

Primary Project Goal:

To demonstrate the techno-economic viability of the phase transitional absorption process, which is a novel, innovative, low cost, and low energy-consuming carbon dioxide (CO_2) capture technology relative to the mainstream amine-based technology.

Technical Goals:

To understand the mechanisms of phase transitional absorption by measuring absorption kinetics, regeneration rate, loading capacity, absorbent losses, and regeneration energy losses; and further to compare with other methods, such as the state-of-art monoethanolamine absorption.

Technical Content:

The phase transitional absorption process is radically different from the conventional absorption processes. It uses an activated agent, which, when mixed with a special solvent, forms a special phase transitional absorbent for CO_2 capture. The absorbent, after absorbing CO_2 from flue gas in an absorber, flows into a settler where it is separated into two phases: a CO_2-rich phase and a CO_2-lean phase. The CO_2-rich solvent is then sent to a regenerator for regeneration. After regeneration, the solvent is cooled and mixed with the CO_2-lean phase and sent to an absorber to complete the cycle. The absorbent is characterized as phase transitional absorbent due to its ability to separate the concentrated CO_2-rich phase from CO_2-lean phase. A schematic diagram of the process is shown in Figure 1. It may be noted that the process is similar to a conventional MEA process, except that a settler is added for separating the two phases.

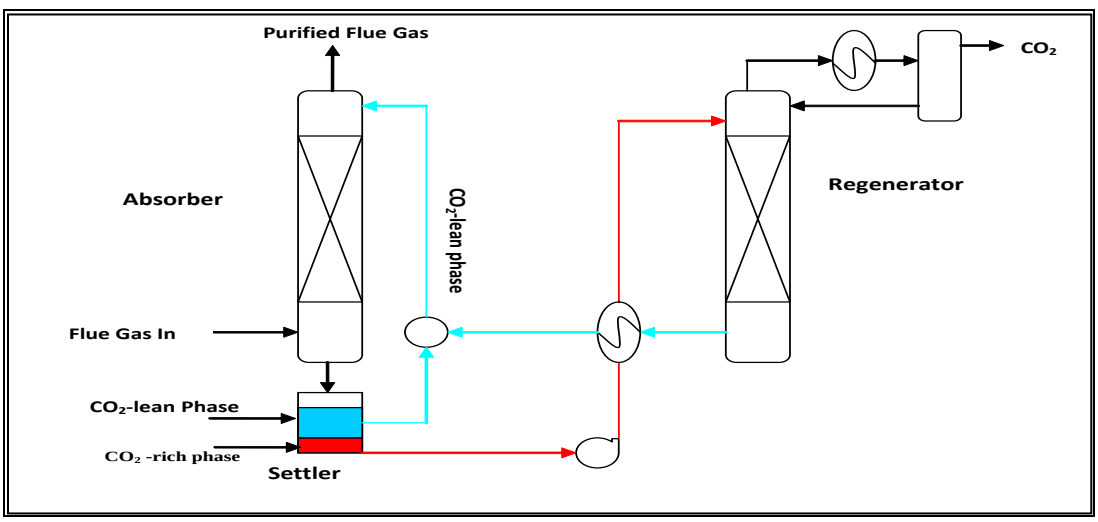

Figure 1: Concept Flow Diagram of Phase Transitional Absorption

In the conventional absorption process, such as an MEA process, the entire solvent is sent to the regenerator for regeneration, which necessitates a large circulation pump and a large amount of

regeneration energy. In contrast, in the phase transitional absorption process, the absorbent separates into two phases, and only the CO_2-rich phase needs to be regenerated. The CO_2-rich phase is only approximately 20 percent of the total absorbent. Thus, the pumping and heating requirement are significantly less compared to the MEA process.

Another important feature of the phase transitional absorption is that the absorption rate of CO_2 will be enhanced by selecting the proper solvent, as shown in Figure 2.

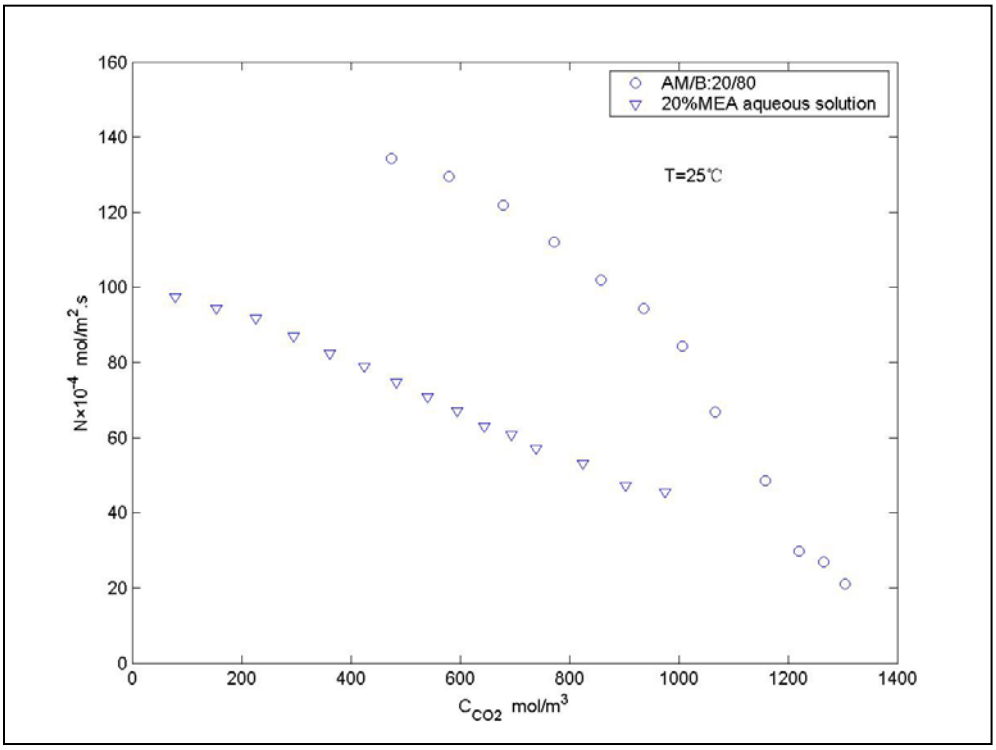

Figure 2: Absorption Rate Comparison(Phase Transitional Absorption vs. MEA Technology)

T = 25 ^{o}C; P_{CO2} = 1 atm; N=60 rpm; V_L = 900 ml.

Phase Transitional Absorption: activated agent: AM 20% by volume; solvent: B 80%.

MEA Technology: 20 % (by volume) MEA aqueous solution.

Experimental results also showed that the temperature did not have strong impact on the absorption rate for the several absorbent studied. The small effect on the absorption rate by temperature could be attributed to the much smaller reaction heat.

The highest absorption rate is found when the activated agent was in the range between 30% to 40% by volume. The range may vary if the different activated agents and solvents are used. The range of activated agents with the highest absorption rate is highly related to the physical and chemical properties of the absorbent (i.e., activated agents and solvents), and also the combination.

It was determined from these results that the mechanism of the absorption is a fast chemical reaction controlled by the liquid side mass transfer. Therefore, an absorber with large gas-liquid interface and sufficient liquid turbulence is recommended in order to have a higher absorption rate, such as a packed column.

Table 1: Parameters for Phase Transitional Absorption Processes

	Parameter	Current R&D Value	Target R&D Value
Solvent Properties	Type of solvent	Non Aqueous amine	
	Molecular weight	Varies	
	Boiling point (^{0}C)	Varies	
	Heat of reaction (kJ/mole CO_2)		
	CO_2 loading/working capacity*, wt.%	20%	
	Solvent concentration to stripper (mol/liter)		
	Heat capacity of solution (kJ/K/kg)		
	Viscosity, cP		
Operating Conditions	Absorption temperature, °C	25 – 50	
	Absorption pressure, atm.	atmospheric	
	CO_2 capture efficiency, %	>90	
	Regeneration method	Thermal	
	Regeneration temperature, °C	90 – 120	
	Regeneration pressure, atm.	Vacuum – 2 or 3	
Heat Integration	Required regeneration steam temperature, °C	120	
Miscellaneous	Solvent make-up rate, kg/kgCO_2	N/A	
Product Quality	CO_2 purity, %	99.9%	
	N_2 concentration, %		
	Other contaminants, %		
Process Performance	Electricity requirement, kJ/kgCO_2		
	Heat requirement, kJ/kgCO_2	1,000 (heat)	
	Total energy (electricity equivalent), kJ/kgCO_2		

*Working capacity is the loading difference CO_2 rich solution before and after it is regenerated.

Technology Advantages:

- Greatly reducing regeneration energy comparing with MEA process.
- Higher absorption rate, resulting in lower capital investment for absorption equipment.
- Higher CO_2 working capacity, which will reduce sensible heat and solvent volume in circulation.
- Low corrosion rate to carbon steel compared to MEA process.
- Potentially less solvent loss.
- Non-toxic, environmentally safe.

R&D Challenges:

- Process exists only at the laboratory scale and needs to be scaled up.
- Moisture in flue gas may have impact on the process.

Results To Date/Accomplishments:

- Measured the absorption rate at 15°C, 25°C, 35°C, 45°C, and 55°C.
- Measured the effect of absorbent concentration in solution (from 10% to 50% by volume) on absorption rate and loading capacity.
- Measured the effect of solution agitation speed (30 rpm, 60 rpm, and 90 rpm) on absorption rate.

- Measured the absorption rate at 1 atm of CO_2 partial pressure.
- Conducted the regeneration tests; measured the regeneration rate at different temperature.
- Conducted the corrosion tests for carbon steel coupon.
- Conduct the initial process evaluation based on the lab results and made the comparison with MEA absorption.

Next Steps:

- Process research data.
- Prepare patent application.
- Prepare for pilot scale.

Available Reports/Technical Papers/Presentations:

Hu, Liang, Monica Wood, Joseph Hoque. "CO_2 Capture from Flue Gas by Phase Transitional Absorption." http://www.netl.doe.gov/publications/proceedings/07/ucr/abstracts/Hu.pdf (Accessed 9/28/2009).

Contract No.:	**NETL Project Manager:**
DE-FG26-05NT42488	Isaac Aurelio Isaac.Aurelio@NETL.DOE.GOV
Principal Investigator:	**Partners:**
Liang Hu Hampton University lianghu59@yahoo.com	None