InnoSepra

# Bench-Scale Development & Testing of a Novel Adsorption Process for Post-Combustion $CO_2$ Capture

DOE Funding Award DE-FE-007948

Project-Kickoff Meeting

November 22, 2011

InnoSepra, LLC

Middlesex, NJ

# Executive Summary

- The InnoSepra process utilizes physical sorption to produce dry $CO_2$ at high purity (>99%) and high recovery (>90%) from the flue gas taken after the FGD.
- Potential for more than 50% reduction in the capital and more than 40% reduction in parasitic power for $CO_2$ capture compared to MEA based on lab scale testing
- The process needs to be tested with flue gas containing $SO_X$, and Hg, and at a bigger scale (>1 tons per day) to address the process risks, and the effect of contaminants
  - This DOE project will address various process risks and scale up issues through lab testing and field testing, process simulation, and detailed economic evaluation

# Project Objectives

## The overall project objective

- Demonstrate the effectiveness of the InnoSepra sorbent-based post-combustion $CO_2$ capture technology, to achieve at least 90% $CO_2$ removal with a potential pathway for no more than a 35% increase in cost of electricity as a retrofit to coal-fired utility plants

## Specific project objectives

- Confirm the design basis for bench-scale testing based on lab scale results and process modeling
- Design, build and test a bench scale unit in the lab
- Test the bench scale unit on actual coal-based flue gas from a power plant
- Perform scale up modeling, process and equipment design, engineering, and costing for installation of the technology at a commercial 550 MW power plant to estimate $CO_2$ capture cost

# Background Information

# Post-Combustion $CO_2$ Capture Challenges

- Very large gas volumes at low pressure (~1.05 bara)
- Low $CO_2$ partial pressure, <150 mbar
- The impurities in the flue gas particularly NOX, $SO_X$, Hg, and particulates can have a significant impact on the solvents and sorbents used for $CO_2$ capture.
- Significant loss in power generation efficiency due to $CO_2$ capture, 7-10% absolute.

# Sorbent-Based $CO_2$ Capture

- **Capture $CO_2$ by physical sorption**
  - 140-240 kcal/kg heats of adsorption
    - Significantly lower than the total energy for amine systems
- **Capture $CO_2$ by chemical reaction** with amines / carbonates
  - 740-940 kcal/kg heats of reaction
    - Similar to the amine-based absorption systems
  - Ex. $Na_2CO_3 + CO_2 + H_2O$ -------> $2\ NaHCO_3$
    $\Delta H_{rxn} = -740$ Kcal/kg of $CO_2$

# $CO_2$ Capture from Power Plants

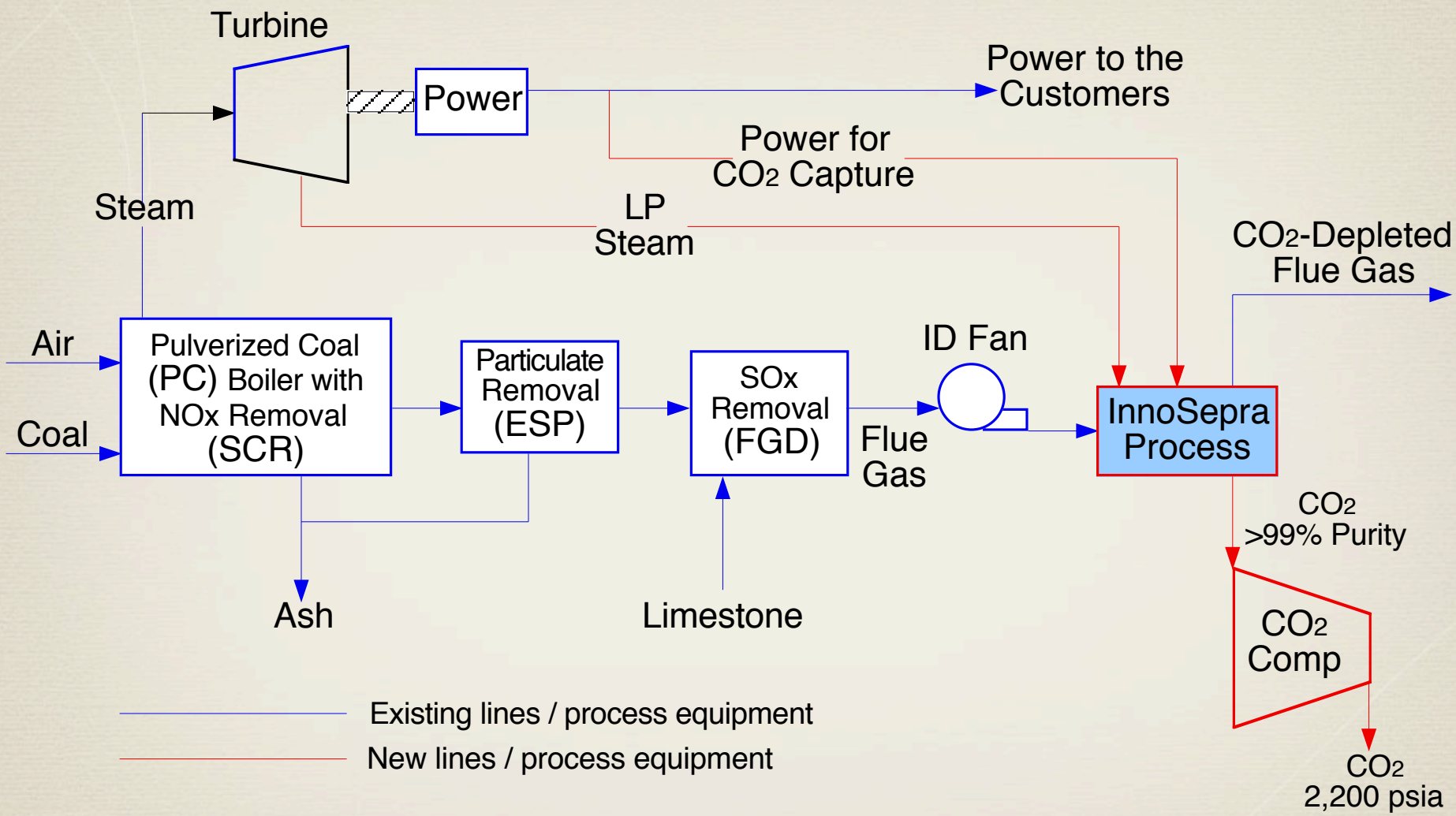

# $CO_2$ Capture Testing Summary

- More than 10 commercial and laboratory materials tested for over 4 years, thousands of complete cycles
- 90% $CO_2$ recovery and over 99% purity under optimized conditions for a feed containing 13-15% $CO_2$
  - Possible to regenerate below 100°C with potential parasitic power consumption below 450 Kcal/Kg of $CO_2$.

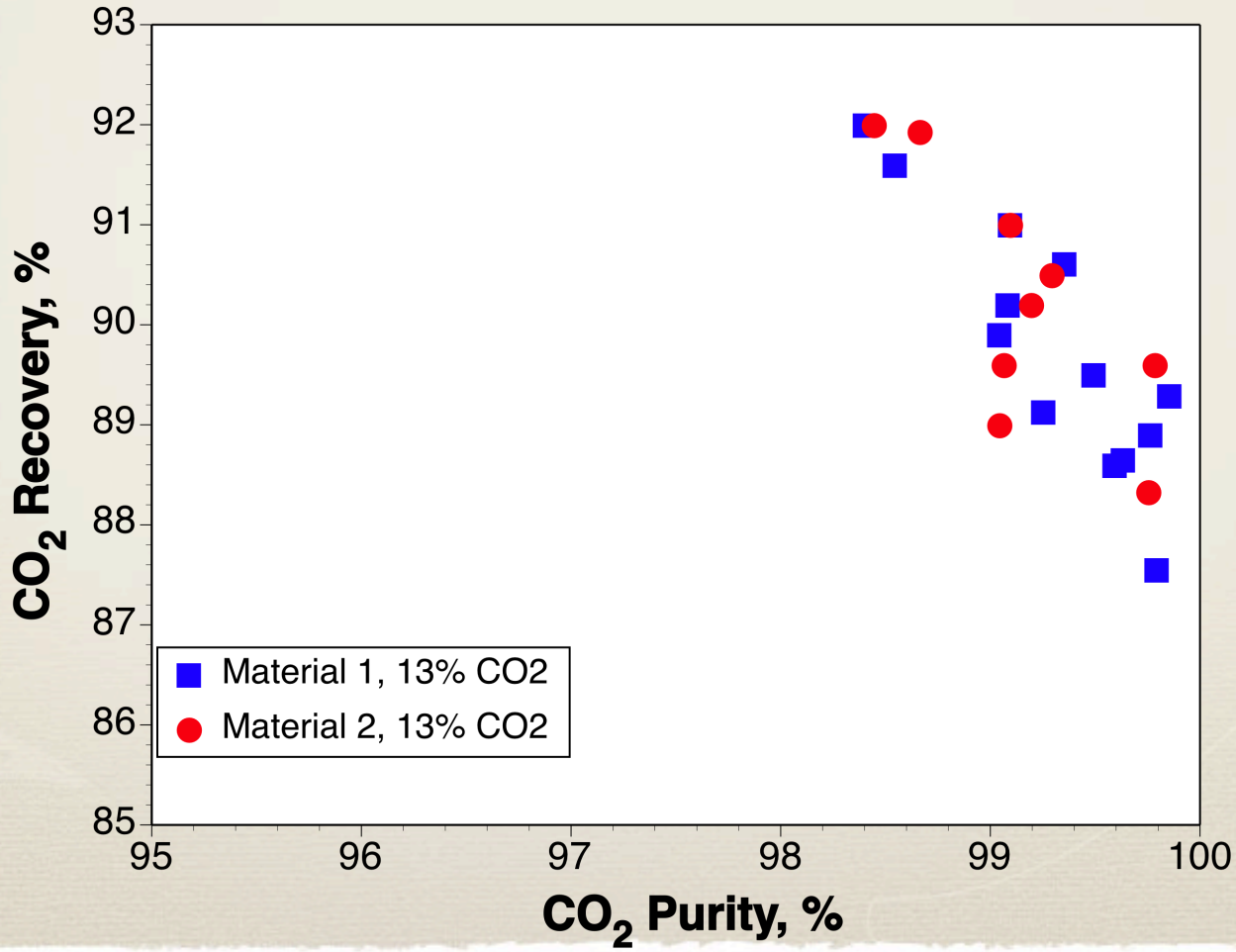

# Comparison with MEA for DOE Baseline Study

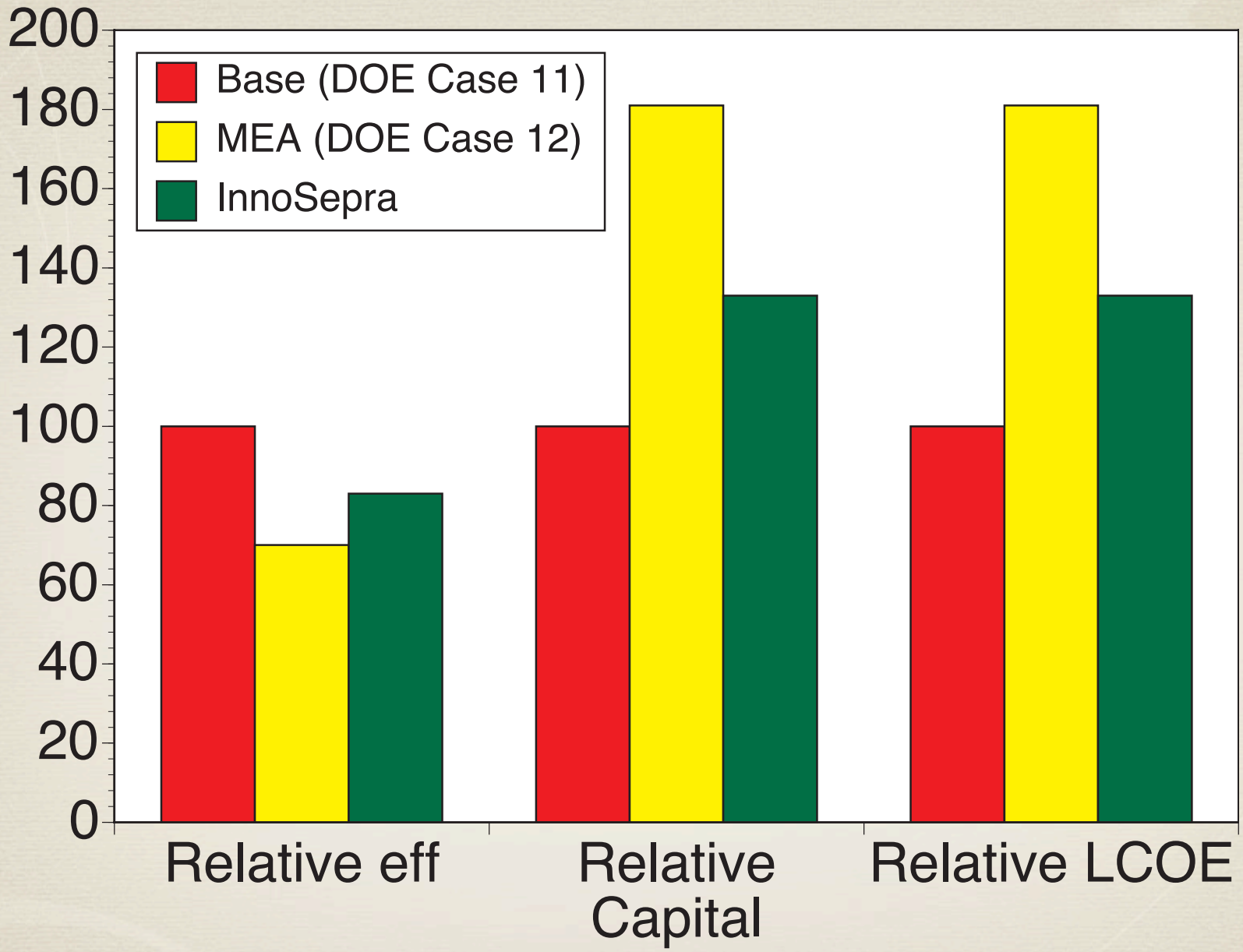


"Cost and Performance Baseline for Fossil Energy Plants", DOE/ NETL-2007/1281, Aug 2007.
(http://www.netl.doe.gov/energyanalyses/pubs/Bituminous%20Baseline_Final%20Report.pdf)

# The DOE Project

# Project Scope

In the first budget period InnoSepra will

- Experimentally determine the adsorption isotherms, and measure the heat and mass transfer rates
- Determine the effect of contaminants on the process performance
- Conduct a preliminary technical and economic feasibility study to demonstrate the commercial merits

In the second budget period InnoSepra will

- Design and construct the bench scale unit
- Commission the bench scale unit in the laboratory and conduct tests using a synthetic flue gas feed

In the third budget period InnoSepra will

- Commission the unit at the NRG WA Parish coal fired power station and determine the performance of the InnoSepra process treating a flue gas from the FGD unit
- Update the technical and economic feasibility study based on lab and field tests
- Perform a preliminary technology environmental health and safety (EH&S) risk assessment

# Project Budget

| Source | BP1<br>Oct 1, 2011 to Aug 31,2012 | BP2<br>Sep 1, 2012 to Feb 28, 2012 | BP3<br>Mar 1, 2013 to Dec 31,2013 | Total |
|---|---|---|---|---|
| Dept of Energy | $850,187 | $696,204 | $1,048,494 | $2,529,885 |
| Cost Share | $212,547 | $174,052 | $268,756 | $655,355 |
| Total Project | $1,062,734 | $870,256 | $1,317,250 | $3,185,240 |

# Project Timeline

| ID | Task Name | Start | Finish |
|---|---|---|---|
| 1 | InnoSepra Bench Scale CO2 Capture process | Sat 10/1/11 | Tue 12/31/13 |
| 2 | 1. Project Management Planning | Sat 10/1/11 | Fri 12/27/13 |
| 3 | Complete kick-off meeting | Tue 11/22/11 | Tue 11/22/11 |
| 4 | Complete Update of Project Management Plan | Mon 1/30/12 | Mon 1/30/12 |
| 5 | Budget Period 1 | Sat 10/1/11 | Fri 8/31/12 |
| 6 | 2. Bench Scale Unit Operating Conditions | Sat 10/1/11 | Thu 12/15/11 |
| 7 | Identify preferred CO2 adsorbents | Thu 12/15/11 | Thu 12/15/11 |
| 8 | 3. Obtain Heat & Mass Transfer data | Mon 12/19/1 | Fri 2/17/12 |
| 9 | Heat and mass transfer data | Fri 2/17/12 | Fri 2/17/12 |
| 10 | 4. Determine NOx, SOx Contaminants Effects | Mon 1/16/12 | Fri 4/20/12 |
| 14 | 5. Adsorbent Properties | Mon 1/16/12 | Fri 3/23/12 |
| 18 | 6. Develop & Validate Process Model | Mon 1/2/12 | Fri 8/17/12 |
| 24 | 7. Preferred Heat Transfer Equip design | Mon 4/9/12 | Fri 6/15/12 |
| 25 | 8. Preliminary Technoeconomic Feasibility Study | Mon 5/14/12 | Fri 7/20/12 |
| 26 | Technoeconomic study | Fri 7/20/12 | Fri 7/20/12 |
| 27 | 9. Preliminary Design & Costing of Bench Scale Unit | Mon 5/28/12 | Fri 8/10/12 |
| 28 | Design and costing of bench scale unit | Fri 8/10/12 | Fri 8/10/12 |
| 29 | Go/No Go Decision | Fri 8/31/12 | Fri 8/31/12 |
| 30 | | | |
| 31 | Budget Period 2 | Sat 9/1/12 | Thu 2/28/13 |
| 32 | 10. Detailed design of Bench Scale unit for Field-testing | Sat 9/1/12 | Fri 10/19/12 |
| 38 | 11. Fabricate Bench-Scale Unit for Field Testing | Mon 10/1/12 | Fri 12/7/12 |
| 43 | 12. Lab Testing with Synthetic Flue Gas | Mon 12/10/1 | Fri 2/22/13 |
| 48 | Complete adsorbent testing in bench unit | Fri 2/22/13 | Fri 2/22/13 |
| 49 | Go/No Go Decision | Thu 2/28/13 | Thu 2/28/13 |
| 50 | | | |
| 51 | Budget period 3 | Fri 3/1/13 | Tue 12/31/13 |
| 52 | 13.Ship, Install & Commission Test Unit at NRG | Fri 3/1/13 | Thu 5/23/13 |
| 56 | Complete bench unit commissioning | Thu 5/23/13 | Thu 5/23/13 |
| 57 | 14. Demonstrate the Process at NRG | Mon 5/27/13 | Fri 8/16/13 |
| 63 | 15. Decommissioning/Dis-Assembly of Bench-Scale Unit | Mon 8/5/13 | Fri 8/30/13 |
| 64 | Bench unit decommissioning | Fri 8/30/13 | Fri 8/30/13 |
| 65 | 16. Set Commercial Process Configuration | Mon 7/8/13 | Fri 8/9/13 |
| 66 | 17. Updated Process Economics | Mon 8/12/13 | Fri 11/1/13 |
| 67 | Final technoeconomic study | Fri 11/1/13 | Fri 11/1/13 |
| 68 | 18. Prepare Technology EH&S Risk Assessment | Mon 8/19/13 | Fri 10/25/13 |
| 69 | Prepare Final Report | Mon 10/7/13 | Fri 12/13/13 |
| 70 | Present Final Report | Tue 12/31/13 | Tue 12/31/13 |

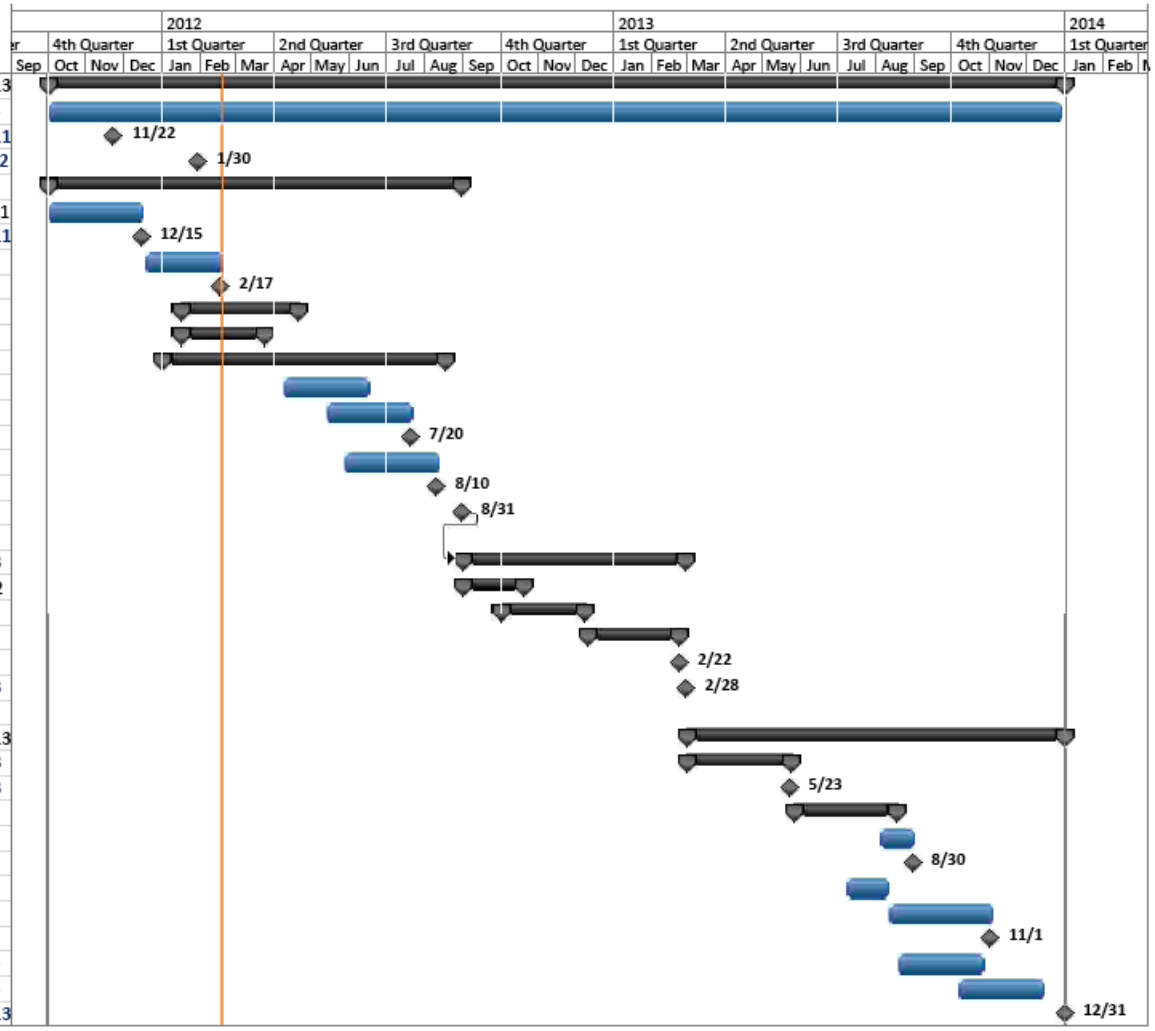


Task | Split | Milestone | Summary | Project Summary | External Tasks | External Milestone | Inactive Task | Inactive Milestone | Inactive Summary | Manual Task | Duration-only | Manual Summary Rollup | Manual Summary | Start-only | Finish-only | Deadline | Progress

# Key Project Milestones

## Budget Period 1

- Project kickoff meeting with DOE-NETL (11/22/2011)
- Identify two adsorbents with highest performance (12/20/11)
- Heat & mass transfer data, sorption isotherms (3/23/12)
- Preliminary technoeconomic evaluation (7/20/12)
- Rigorous process model (8/17/12)
- Design and costing of the bench scale unit (8/10/12)

## Budget Period 2

- Design and fabrication of the bench scale unit (12/7/12)
- Testing of preferred adsorbents in the bench scale unit (2/22/13)

## Budget Period 3

- Commission bench scale unit at the NRG plant (5/23/13)
- Complete field testing of bench scale unit (8/30/13)
- Complete final technoeconomic study (11/1/13)

# Project Organization Chart

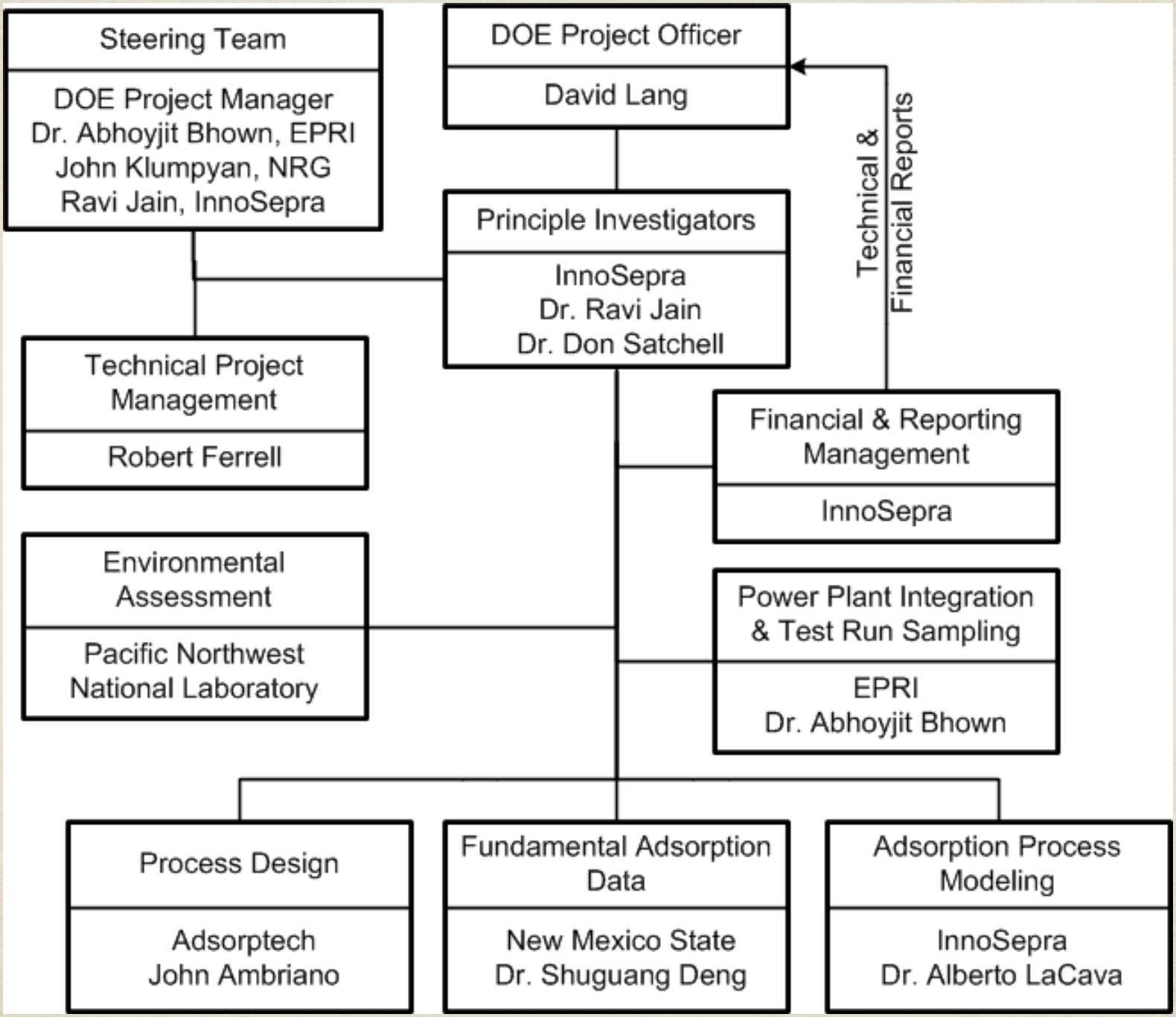

# Success Criteria at Decision Points

| Decision Point | Date | Success Criteria |
|---|---|---|
| Go – No Go decision to build the bench scale unit | 8/31/12 | 1. Limiting the projected increase in LCOE to below 60% based on lab scale testing and detailed technoeconomic evaluation<br>2. Provide a potential pathway for achieving <35% increase in LCOE |
| Completion of bench scale unit testing in the lab | 2/28/13 | 1. Complete bench scale testing of preferred adsorbents in the lab and select preferred adsorbent for field testing |
| Project Closeout | 12/31/13 | 1. Limiting the projected increase in LCOE to below 60% based on bench scale testing in the field and independent technoeconomic evaluation<br>2. Provide a potential pathway for achieving <35% increase in LCOE |

# Project Risk Register

| Description of Risk | Probability | Impact | Risk management |
|---|---|---|---|
| **Technical Risks** | | | |
| $CO_2$ Capture & Regeneration | Moderate | Moderate | Modify process design |
| Heat Transfer Design & Performance | Moderate | High | Modify heat transfer design |
| Moisture and Contaminants Removal | Moderate | High | Improve contaminants control steps |
| **Technical Risks** | | | |
| Project Team Availability | Low | Moderate-High | Identify backup resources |
| Suitability/ Availability of Sites | Low-Moderate | Low-Moderate | Identify backup sites |
| Component manufacturing risk | Low | Moderate | Simplify key components design, identify alternate suppliers |

# Technical Merit and Approach

Key Tasks

- Task 2: Laboratory testing to identify preferred adsorbents
  - Identify two adsorbents with highest productivity, $CO_2$ recovery, and $CO_2$ purity

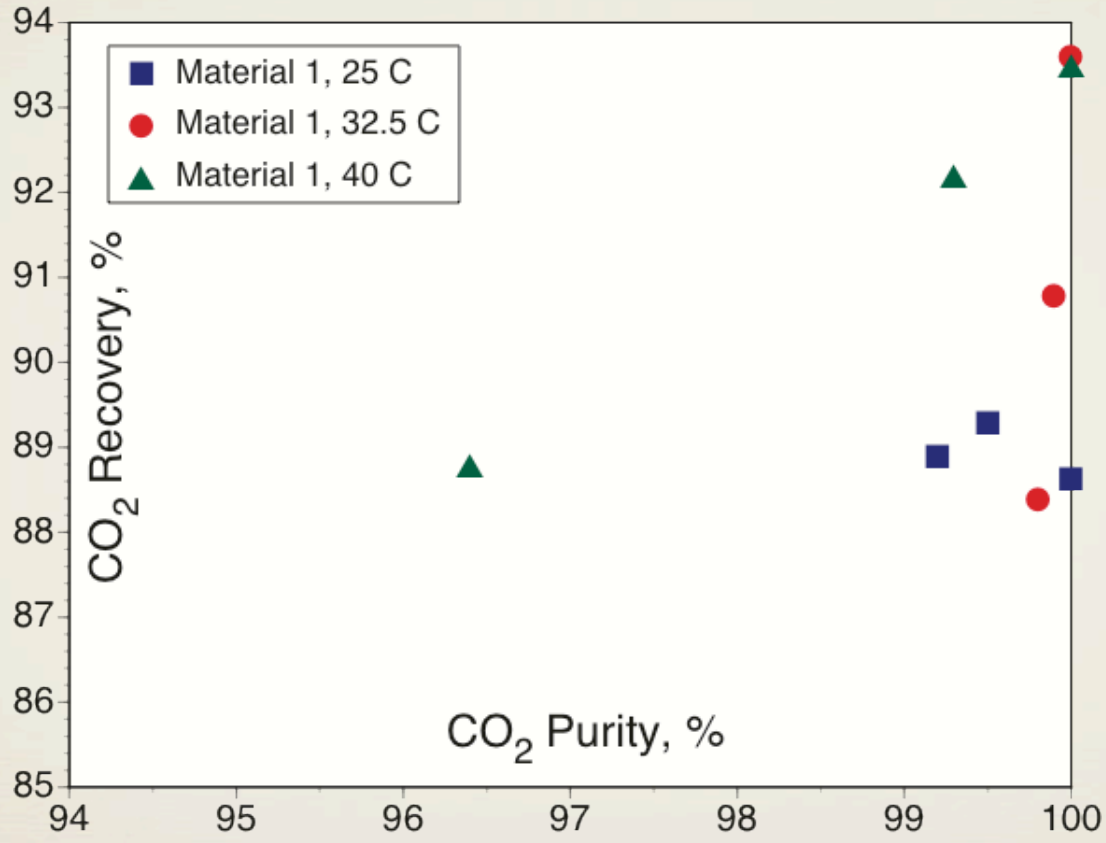


- Task 3: Obtain heat and mass transfer data
  - Heat and mass transfer data for various process configurations

# Technical Merit and Approach

- Task 5: Adsorbent Properties
  - Determine adsorbent kinetics, isotherms, and physical properties
- Task 6: Develop and Validate Process Model
  - Rigorous process simulation model incorporating adsorbent properties, heat transfer equipment, and lab scale process data
- Task 8: Complete Preliminary Technical and Economic Feasibility Study
  - Obtain $CO_2$ capture cost and LCOE based on lab test results and process simulation model
- Tasks 10 and 11: Design and Fabrication of Bench Scale Unit
  - Design and fabricate a bench unit capable of processing at least 1 tons per day $CO_2$ for lab and field testing
- Task 12: Lab Testing of Bench Scale Unit
  - Test the bench scale unit in the lab with the preferred adsorbents and synthetic flue gas (moisture-saturated, ~15% $CO_2$, 50-100 ppm $SO_2$, 50-100 ppm $NO_X$)

# Technical Merit and Approach

- Task 13: Install and commission the bench scale unit at NRG's W.A. Parish plant
- Task 14: Testing with actual flue gas for up to 8 weeks
  - EPRI sampling to measure process performance
  - Analysis of used adsorbents to determine the effect of contaminants on adsorption capacity, and adsorbent life
- Task 16: Set commercial unit process configuration
- Task 17: Independent techno-economic analysis
  - EPRI will use a contractor for the techno-economic analysis
- Task 18: Prepare EH&S risk assessment (PNNL)

# Acknowledge and Disclaimer

Acknowledgement: This presentation is based on work supported by the Department of Energy under Award Number DE-FE0007948.

Disclaimer: “This presentation was prepared as an account of work sponsored by an agency of the United States Government. Neither the United States Government nor any agency thereof, nor any of their employees, makes any warranty, express or implied, or assumes any legal liability or responsibility for the accuracy, completeness, or usefulness of any information, apparatus, product, or process disclosed, or represents that its use would not infringe privately owned rights. Reference herein to any specific commercial product, process, or service by trade name, trademark, manufacturer, or otherwise does not necessarily constitute or imply its endorsement, recommendation, or favoring by the United States Government or any agency thereof. The views and opinions of authors expressed herein do not necessarily state or reflect those of the United States Government or any agency thereof.”