An Integrated Vacuum Carbonate Absorption Process Enabled with an Enzyme Biocatalyst for CO_2 Absorption

Yongqi Lu[1], Xinhuai Ye[1], Shihan Zhang[1], Massoud Rostam-Abadi[1], Joseph Hirschi[2], Andrew Jones[3]

[1] Illinois State Geological Survey, Prairie Research Institute, University of Illinois at Urbana-Champaign; [2]Illinois Clean Coal Institute; [3]U.S. Department of Energy, National Energy Technology Laboratory

ABSTRACT

A potassium carbonate-based absorption process for post-combustion CO_2 capture is being developed at the University of Illinois at Urbana-Champaign. A unique feature of the process is its ability to use either a waste steam or a low quality steam from the power plant's low pressure turbine to significantly lower energy use and related parasitic power loss of CO_2 capture. The process uses a biocatalyst, *carbonic anhydrase* (CA) enzyme to enhance the CO_2 absorption rate into the potassium carbonate (PC) solution. A process simulation study concluded that energy use performance of the process is 20-30% lower than a conventional mono-ethanol-amine process. One activity of the process development study has been evaluating catalytic reactivities and stabilities of two CA enzymes at elevated temperatures and in the presence of sulfate, nitrate and chloride impurities under typical operating conditions of the process for up to six months. Results to date indicate that CA enzyme is an effective biocatalyst to accelerate the CO_2 absorption into the PC solution.

1. INTRODUCTION

Post-combustion flue gases from coal-fired utility boilers have a large volume (3,500 acfm per MW capacity), contain a low CO_2 concentration (10-15 vol%), and are at low pressure (1 atm). From a process engineering standpoint, absorption processes tend to be more practical for such large-scale CO_2 capture. Mono-ethanol-amine (MEA)-based absorption processes are available technologies for post-combustion CO_2 capture. However, these processes are expensive and would result in an 80-85% increase in the Cost of Electricity (COE).[1] The major contributor to the cost, amounting to about 60%, is due to intensive energy use that results in a parasitic power loss by about 30% in the power plant. Reducing the energy consumption in the capture process is the key to lowering the CO_2 capture cost. An Integrated Vacuum Carbonate Absorption Process (IVCAP) is being developed at the University of Illinois to reduce the energy use for CO_2 capture. The solvent used in the process is potassium carbonate (PC). The weak chemical affinity of CO_2 with K_2CO_3 enables CO_2 to be desorbed from the CO_2-rich solution at a low temperature (104-158 ºF) and pressure (2-8 psia). This feature of PC enables the use of either the waste steam exiting the power plant's low pressure (LP) turbine, or a low quality steam from the LP turbine, to provide the energy required for the CO_2 desorption process.[2] The efficiency of heat-to-electricity varies in steam quality in the steam cycle of the power plant. The use of low pressure and temperature steam will significantly lower electricity loss of the IVCAP compared to the MEA process.

The overall reversible reaction involved in CO_2 absorption can be expressed as follows:

$$CO_2 + H_2O + K_2CO_3 = 2KHCO_3 \quad \text{(R1)}$$

Two parallel reaction mechanisms control the rate of CO_2 absorption into the PC solution. The first involves the hydration of dissolved CO_2 with water:[3]

$$CO_2\,(l) + H_2O = H_2CO_3 = H^+ + HCO_3^- \quad \text{(R2)}$$

The dissociation of H_2CO_3 to HCO_3^- is fast and can be assumed to be at equilibrium. The rate of CO_2 hydration with water is thus dominant in this reaction mechanism. The second reaction involves the hydration of dissolved CO_2 with hydroxyl ions in solution.

$$CO_2\,(l) + OH^- = HCO_3^- \quad \text{(R3)}$$

Reaction R3 only becomes important at high pH values. At pH<8, it is negligible because concentration of $[OH^-]$ is low. At pH=8-10, both Reactions R2 and R3 occur, and at pH>10, reaction R3 predominates over Reaction R2.[4] Rate constants of these two reactions have been reported in the literature.[3,5] Intrinsic rates of CO_2 absorption by Reactions (R2) and (R3) at pH 10 are 600,000 times and 3,000 times lower than a 5M MEA aqueous solution.

Therefore, it is necessary to use a promoter or a catalyst to accelerate the absorption rate of CO_2 into the PC solution for practical application. Most of the current efforts for promoting the absorption rate of CO_2 into a weak solvent include mixing of another solvent or a mixture of different solvents with stronger CO_2 affinity with the prime solvent. This approach, however, will increase the heat of absorption of the solvent mixture [6] and impact the vapor-liquid equilibrium (VLE) behavior required for vacuum desorption in the IVCAP. By contrast, employing a catalyst in the absorption can increase the absorption rate without changing the heat of absorption and VLE of the PC.

The most effective catalyst for CO_2 absorption known by far is the *carbonic anhydrase* (CA) enzyme. For example, the turnover number of a human CA reaches 1.4×10^6 s^{-1} at pH=9 and 25°C.[7] The CA enzyme is a broad group of zinc metalloenzymes that are ubiquitous in all animals, photosynthesizing plants, and some non-photosynthetic bacteria.[8] This enzyme catalyzes the CO_2 hydration reaction with water according to the following overall reaction:[9]

$$H_2O + CO_2 + CA = HCO_3^- + H^+ + CA \quad \text{(R4)}$$

In this study, we aimed at evaluating the effectiveness of the CA enzyme for promoting the CO_2 absorption into the PC solution. The activity of the CA enzyme was investigated at different CO_2 loading, temperature, enzyme dosage level, and CO_2 partial pressure conditions. The stability of the CA enzyme was examined for up to six months, and the effect of major flue gas contaminants on the activity and stability of the CA enzyme were studied over a two-month period under typical operational conditions. A techno-economic analysis compared the energy use performance of CO_2 capture of IVCAP and the MEA process.

2. EXPERIMENTAL METHOD

2.1 Materials

Two technical-grade CA enzymes provided by a leading enzyme manufacturer were investigated. One enzyme is for general purpose and the other is a variant engineered for

improved thermophilic performance (denoted as ACA1 and ACA2, respectively). The enzymes have an approximate molecular weight of 25-30 kDa. They were produced by microbial fermentation using a benign host organism, which was removed during recovery of the enzyme broth and thus not present in the samples. ACA1 was received in the form of solution containing about 3 g CA/l and small amounts of low molecular weight fermentation residues, processing acids, salts, and other proteins. ACA2 was a brown aqueous solution containing approximately 38 g/L of CA enzyme protein. The as-received samples were directly used by mixing into PC solution to prepare a solution of a desired CA dosage level. Various potassium salts used in the experiment were of reagent grade and purchased from Sigma-Aldrich.

3.2 Experimental Setup and Procedure

A laboratory stirred tank reactor (STR) system was employed to measure the rate of CO_2 absorption into the PC solution without and with the CA enzymes, Figure 1. The reactor is a Plexiglas vessel of 10 cm in internal diameter and 17 cm in height and has four symmetrical baffles are attached on its interior wall. Two stirrers are installed to provide mixing in the gas and liquid phases. The temperature of the reactor is controlled by a water jacket with water circulating through a thermostatic water bath. The reactor operated under batch mode. Prior to each experiment, the PC solution was added and the reactor was vacuumed to strip off residue air. A pure CO_2 gas stream was introduced into the reactor within a short time (<3 sec) to a predetermined pressure, and immediately the stirrers were turned on. The total gas pressure change in the reactor was recorded continuously, from which the partial pressures of the CO_2 were obtained by deducting the water vapor partial pressure predetermined. More details of the experimental setup and procedure are described elsewhere.[10]

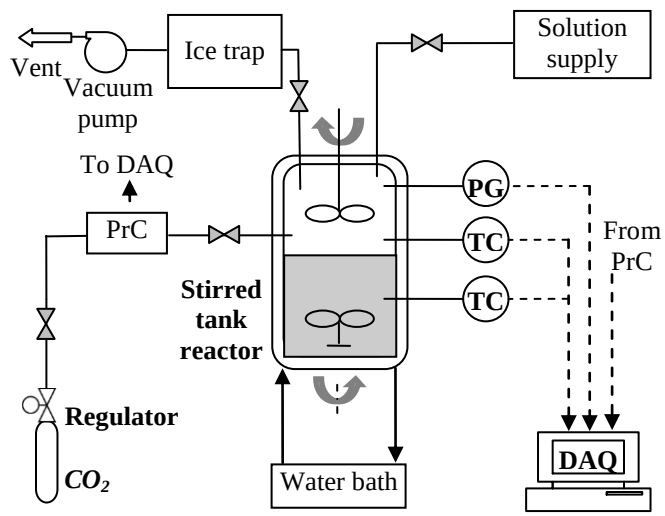

(PrC: Pressure controller; TC: Thermal couple; PG: pressure gauge DAQ: Data acquisition)

Figure 1. Schematic diagram of STR experimental system.

2.3 Data Analysis

For absorption with simultaneous chemical reactions in the liquid phase, an enhancement factor, E, is introduced to describe the overall rate promoted by the reactions over the physical absorption: [11, 12]

$$J_i = E \times k_l \left(\frac{p_i}{He_i} - c_i^b \right) \qquad (1)$$

where J_i is the rate of CO_2 absorption, and k_l is physical mass transfer coefficient in the liquid-phase; He_i is the Henry's law constant, and p_i is the partial pressure of CO_2 over the gas-liquid interface. c_i^b is the concentration of CO_2 (in molecular form) in the bulk liquid phase.

The rate of CO_2 absorption into PC solution can be determined from the gas phase pressure change profile. According to conservation principle and ideal gas law, the rate is expressed as:

$$J_i = -\frac{V_G}{ART}\frac{dp_i}{dt} \qquad (2)$$

where V_G is the volume of the gas phase; A is the gas-liquid interfacial area; R is the universal gas constant; T is the temperature; and t is the time.

The value of c_i^b in Eq. (1) is negligible when a small amount of CO_2 gas is absorbed into a much larger amount of the alkaline PC solution. Eq (3) is obtained by combining Eq. (1) and Eq. (2) and integration,

$$Ln\left(\frac{p_{i,0}}{p_i}\right) = E \times k_l \frac{RTA}{V_G He_i}\Delta t \qquad (3)$$

where $p_{i,0}$ is the initial CO_2 partial pressure. The value of E is determined from the slope of the linear plot of $Ln(p_{i,0}/p_i)\ vs.\ k_l RTA\Delta t/(V_G He_i)$.

For the CO_2 absorption into the PC solution promoted by the CA enzyme, a relative enhancement factor, E_{CA}, defined in Eq (4), describes the overall catalytic activity of the enzyme,

$$E_{CA} = \frac{E_{CA+PC}}{E_{PC}} \qquad (4)$$

where E_{CA+PC} and E_{PC} are the enhancement factors of the PC solutions with and without the CA enzyme. The value of E_{CA} describes how significantly the CA enzyme promotes the reactions compared with the reference PC.

The stability of the CA enzyme in the PC solution is evaluated by the rate of change of E_{CA} or by the activity loss of the enzyme (η_{CA}) over time defined as follows,

$$\eta_{CA} = \frac{E_{CA,0} - E_{CA}}{E_{CA,0} - 1} \times 100\% \qquad (5)$$

where $E_{CA,0}$ is the relative enhancement factor of the fresh CA enzyme.

3. RESULTS AND DISCUSSIONS

4.1. Activity of Free CA Enzyme

The activity of the ACA1 enzyme was evaluated at different dosage levels in the 20 wt% PC solutions with 20% and 40% carbonate-to-bicarbonate (CTB) conversion levels (denoted as PC20-20 and PC20-40, respectively) at 25, 40, and 50 ^oC. Figure 2(a) is a representative plot of the rates of CO_2 absorption at 40 ^oC into the PC20-20 solution containing 20 to 600 mg/L of ACA1 enzyme. As expected, the CO_2 absorption rate significantly increased with increasding CA enzyme dosage. Further improvement may be anticipated at higher CA dosage levels (> 600

mg/L).

The enhancement factors of the CA enzyme, E_{CA}, under various experimental conditions are shown in Figure 2(b). E_{CA} was smaller at higher temperatures. For example, E_{CA} was 8.2 at 25 ^{o}C but decreased to 5.3 at 40 ^{o}C and 3.2 at 50 ^{o}C for the 300 mg/l ACA1 in the PC20-20 solution. At the same temperature, the E_{CA} value increased, as expected, but not proportionally with increasing CA dosage level within the investigated range. For instance, E_{CA} at 40 ^{o}C increased from 2.2 to 2.9 to 5.3 when the CA dosage level in PC20-20 was raised from 50 to 100 to 300 mg/l. The ACA1 enzyme demonstrated larger E_{CA} values and thus was more effective with increasing CO_2 loading in the PC solution.

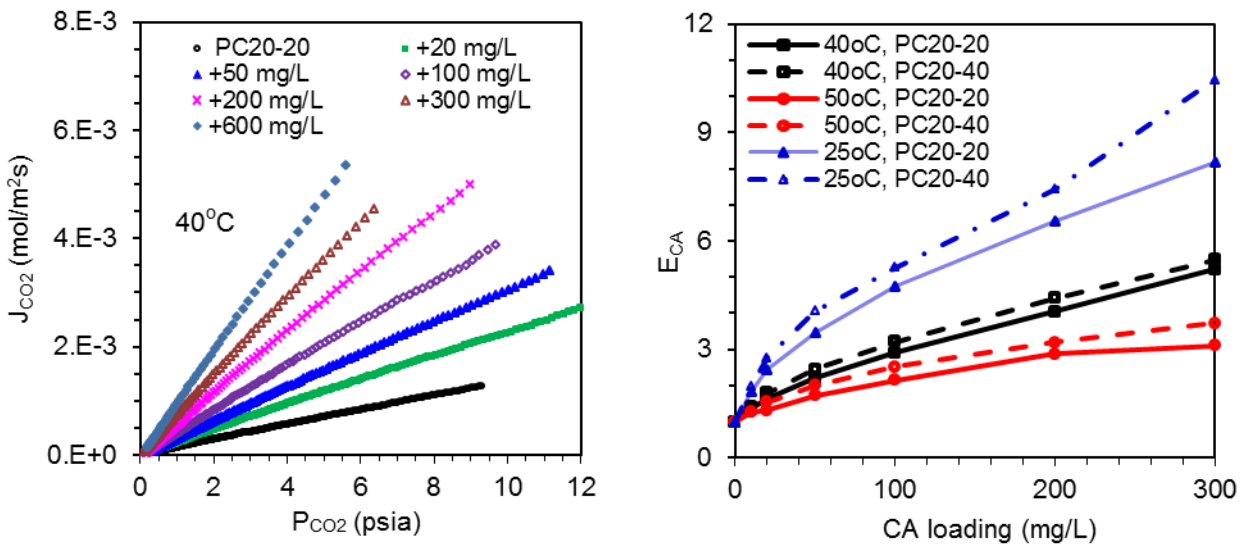

(a) Effect of CA dosage level (b) E_{CA} values

Figure 2. Rates of CO_2 absorption into PC containing different dosage levels of ACA1 enzyme and E_{CA} values at different temperatures and CO_2 loading levels.

Figure 3 shows the rates of CO_2 absorption at 50 ^{o}C into the PC 20-20 and PC20-40 solutions. Without the presence of the CA enzyme, the PC20-40 had lower CO_2 absorption rate than the PC20-20. When a small amount of CA enzyme (50 mg/l) was added into the PC solution, this tendency remained the same; however, when the CA dosage was increased up to 300 mg/L, the rate of CO_2 absorption was comparable with that into the PC20-20. This result indicates that the CA activity does not depend on the CO_2 loading of the PC. This observation can be explained by the kinetics for CO_2 absorption into the PC solution with a catalyst. Assuming the overall reaction rate is a pseudo-first-order with respect to CO_2, the rate constant is a linear function of the total CO_2 concentration, [11]

$$r = -d[CO_2]/dt = k_{ov} \times [CO_2] \qquad (6)$$

and

$$k_{ov} = k_{H_2O} + k_{OH}[OH^-] + k_{cat}[CA] \qquad (7)$$

where k_{ov} (s^{-1}) is the overall first order rate constant; k_{H2O} (s^{-1}), k_{OH} ($m^3 kmol^{-1} s^{-1}$), and k_{cat} ($m^3 kmol^{-1} s^{-1}$) are the kinetic rate constants for CO_2 hydration (R2), reaction with [OH^-] (R3), and

the hydration reaction promoted by the catalyst (R4). At zero or low concentrations of the CA enzyme, the term $k_{OH}[OH^-]$ dominates the overall CO_2 absorption. The PC with a smaller CTB conversion level corresponds to a higher $[OH^-]$ concentration, resulting in a higher CO_2 absorption rate. At higher CA dosages, the catalytic reaction term $k_{cat}[CA]$ becomes dominant, leading to a smaller difference between the rates into the PC with different CTB conversion levels.

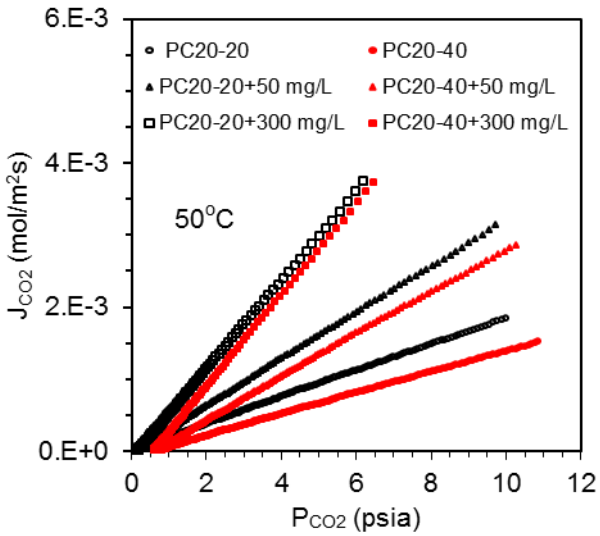

Figure 3. Rates of CO_2 absorption into PC20-20 and PC20-40 solutions at 50 °C without and with 50 and 300 mg/L ACA1 enzyme.

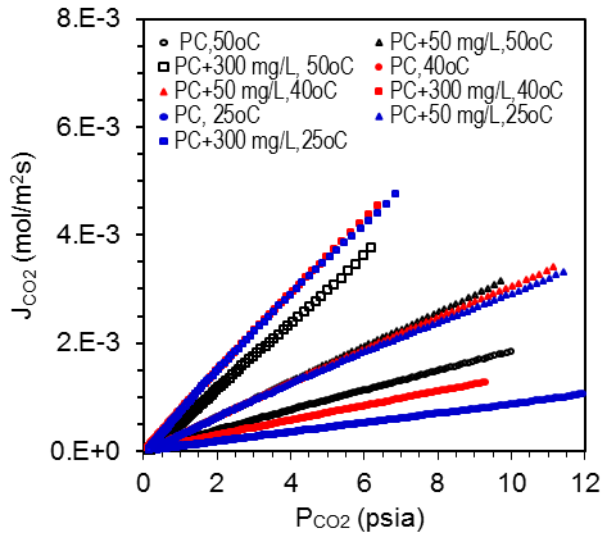

Figure 4. Effect of temperature on rates of CO_2 absorption into PC20-20 without and with 50 and 300 mg/L ACA1 enzyme.

Figure 4 displays the effect of temperature on the rates of CO_2 absorption into the PC20-20 solution. As expected, for the PC solution without the addition of CA enzyme, the rate increased with increasing temperature. At 50 mg/L ACA1 enzyme dosage, the impact of temperature on the absorption rates became less significant; at 300 mg/l ACA1 dosage, the CO_2 absorption rates at 25 °C and 40 °C were comparable and slightly higher than at 50 °C. This phenomenon can be explained by the temperature dependence of CO_2 solubility (Henry's constant) and reaction kinetics. The CO_2 solubility decreases while the reaction kinetics increases with increasing temperature. Because the CA catalyst reduces the activation energy of the CO_2 hydration, the kinetics becomes less dependent on the temperature. At 300 mg/l CA dosage, increasing the temperature from 25 °C to 50 °C reduced the solubility much more than increasing the CO_2 intrinsic reaction rate.

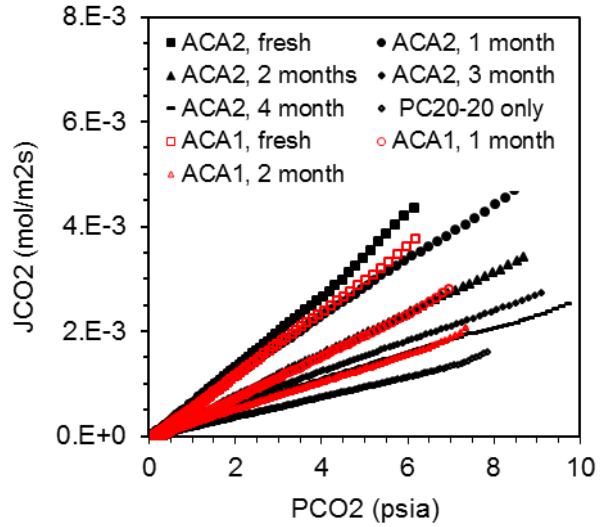

Figure 5. Rates of CO_2 absorption at 50 °C into PC20-20 containing 300 mg/L CA over various periods.

4.2 Long-Term Thermal Stability of CA Enzyme

Long-term thermal stabilities of the ACA1 and

ACA2 enzymes in the PC20-20 and PC20-40 solutions were investigated at 40 ^{o}C, 50 ^{o}C, and 60°C between two and six months. Figure 5 is a representative plot displaying the rates of CO_2 absorption into the PC20-20 at 300 mg/L ACA1 and ACA2 dosage. It was observed that the ACA2 exhibited a better thermal stability than the ACA1 enzyme at 50 ^{o}C. The CO_2 absorption rates promoted by the ACA2 after two and four months were comparable with those by the ACA1 after one and two months.

The values of E_{CA} and the corresponding activity losses for these two enzymes in the PC 20-20 solution at different temperatures over various periods are shown in Figure 6. At 40 ^{o}C, the initial E_{CA} value of the ACA2 was lower than that of the ACA1 but dropped more slowly over the tested period, Figure 6(a). The ACA2 had a lower initial activity but maintained nearly 85% of its activity during the six-month period, compared to about 30% for the ACA1, Figure 6(b). At 50 ^{o}C, the ACA2 enzyme showed both a higher initial activity and a better stability than the ACA1 enzyme. The activity loss of the ACA2 after 2 months was about 55% and after 3 months was 75%, while that of ACA1 was about 50% and 80% after 1 and 2 months, respectively. At 60 ^{o}C, the ACA2 lost 60% of its initial activity after 1 month and 85% after 2 months. The activity loss of the ACA2 at 60 ^{o}C was comparable with that of ACA1 enzyme at 50 ^{o}C over the corresponding periods.

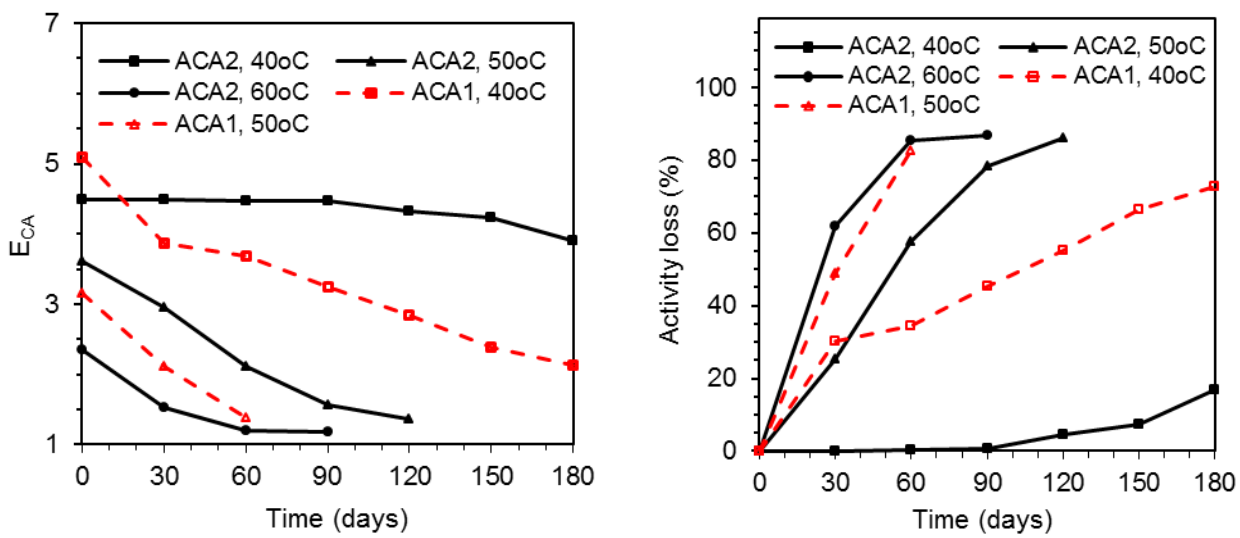

(a) E_{CA} values (b) Activity losses

Figure 6. E_{CA} values and activity losses of ACA1 and ACA2 enzyme over various periods.

It is noteworthy to mention that the CO_2 loading of the PC solution did not significantly impact the thermal stability of the ACA1 and ACA2 enzyme in the PC20-20 and PC20-40 solutions (data not shown).

4.3 Resistance of CA Enzyme to Major Flue Gas Impurities

The activity and stability of the ACA1 enzyme in the PC20-20 solution in the presence of chemical impurities were examined over a 60-day period at 50°C. The ACA1 dosage was kept at 300 mg/L in each experiment. The selected impurities included sulfate, nitrate and chloride

anions, which represent the liquid contaminants derived from the major gaseous pollutants (SO_2, NO_x, HCl) present in the coal combustion flue gas. Various impurity concentrations up to 0.9 M SO_4^{2-}, 0.7 M Cl^-, and 0.2 M NO_3^-, either alone or a mixture of them (0.4M SO_4^{2-}, 0.3M Cl^- and 0.05M NO_3^-) were employed to simulate 30 times, 40 times, and 1 time higher concentrations of these anions in the tested solutions than a typical wastewater from wet FGD scrubbers [13]. Potassium salts containing these anions were used to obtain the desired contaminant concentrations such that no new cations would be introduced into the solutions. Figure 7(a) shows the obtained CO_2 absorption rates into the PC solutions promoted by the ACA1 enzyme without and with the presence of the impurities. Results revealed that the presence existence of these impurities at such high concentrations, either alone or as a mixture, did not significantly reduce the CO_2 absorption rate, indicating that the initial activity of the CA enzyme was not considerably affected by the impurities.

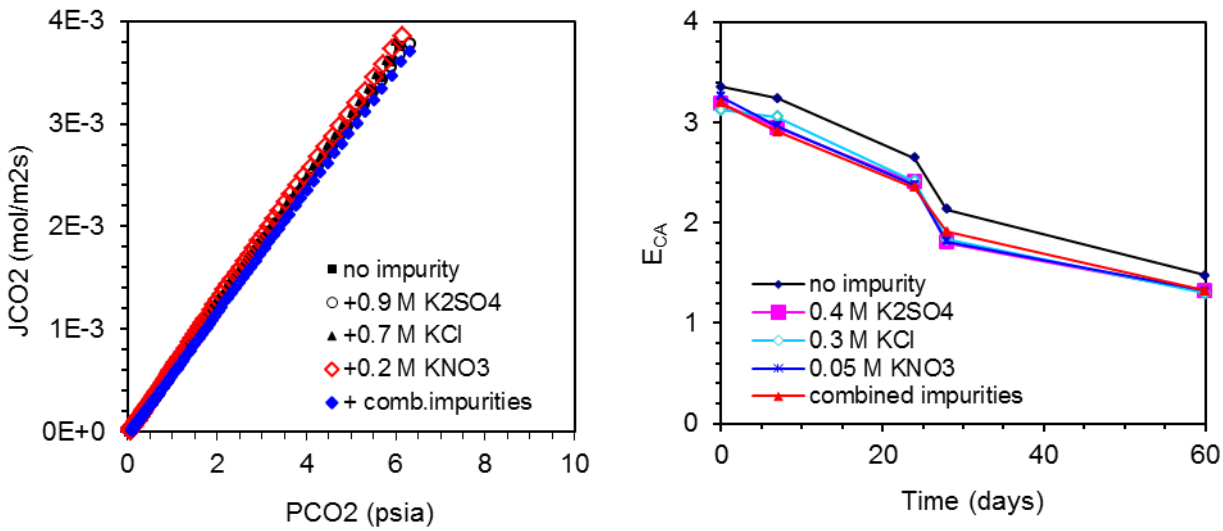

(a) Rates of CO_2 absorption promoted by ACA1 enzyme (b) Activity of ACA1 enzyme over the time

Figure 7. Effect of flue gas impurities on the activity and stability of ACA1 enzyme.

The effect of the impurities on the long term stability of the CA enzyme was investigated in the presence of 0.4 M K_2SO_4, 0.3 M KCl, and 0.05 M KNO_3, either alone or combined together. Figure 7(b) compares the values of E_{CA} over a two-month period with and without the impurities. The change of E_{CA} in the presence of the impurities followed the same trend of that without the impurities. The difference of E_{CA} between the PC solutions with and without the impurities didn't vary over time, indicating that the impurities under the investigated concentration ranges did not significantly affect the long term stability of the ACA1 enzyme. Results show that the activity loss of the ACA1 enzyme caused by the impurities, either alone or as a mixture, was less than 12%.

4. PROCESS ENERGY USE ANALSYSIS

Low pressure steam extracted from the LP turbine in the IVCAP is typically at pressures between 3 and 9 psia, compared to a 60 psia steam required in the MEA process. Use of low quality steam reduces the parasitic power losses in the power plant. In the IVCAP, in addition to

the steam used for indirect heating in the reboiler, a large amount of the steam is directly introduced into the stripper to desorb CO_2. The direct introduction of the steam into the stripper would increase heat exchange efficiency between the hot steam and the PC solution and thus reduce the energy use.

A process simulation software, CHEMCAD (version 6.4.1),[14] was used to perform steady state process simulations of the IVCAP process and the MEA process installed in a 528 MWe (gross) pulverized coal-fired subcritical power plant. The major operating conditions employed in the process simulations are listed in Table 1. Other process parameters, such as stripping temperature, heat duty of the reboiler, and steam extraction pressure were derived from process simulations. A typical Illinois coal containing 6% moisture, 9% ash content and a HHV of 12,475 Btu/lb was selected as the fuel.[15]

Table 1. Main operating conditions employed in simulations of IVCAP and MEA processes

	MEA process	IVCAP process
Solvent concentration, %wt	30%wt MEA	20%wt K_2CO_3
Pressure drop in absorber, psia	2	2
Temp. of flue gas entering absorber, °F	129	129
Temp. of solvent entering absorber, °F	104	122
Liquid to gas ratio, lb/lb	3.86	1, 1.2, 1.5 $(L/G)_{min}$
Lean CO_2 loading, %wt	5.5%	0.5%, 1%, 1.5%
Pressure at the top of stripper, psia	25	2 ,3, 4, 8
Pressure drop in stripper, psia	2	1
Vacuum pump efficiency, %	not applicable	85%
CO_2 removal, %	90%	90%
Compressor efficiency, %	82% (4-stage, inter-stage cooling)	
Inter-stage cooling temperature, °F	104	
Compression end pressure, psia	1,200	

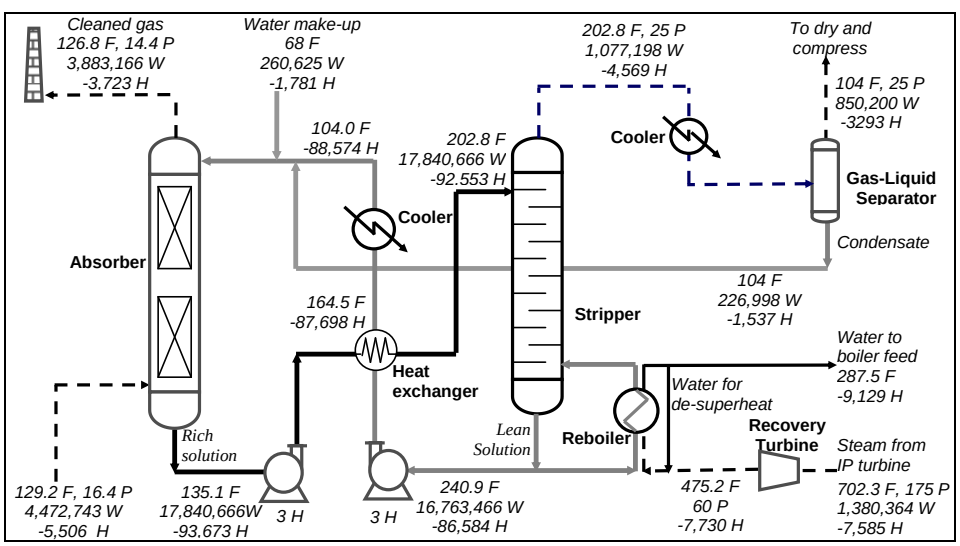

(a) MEA process

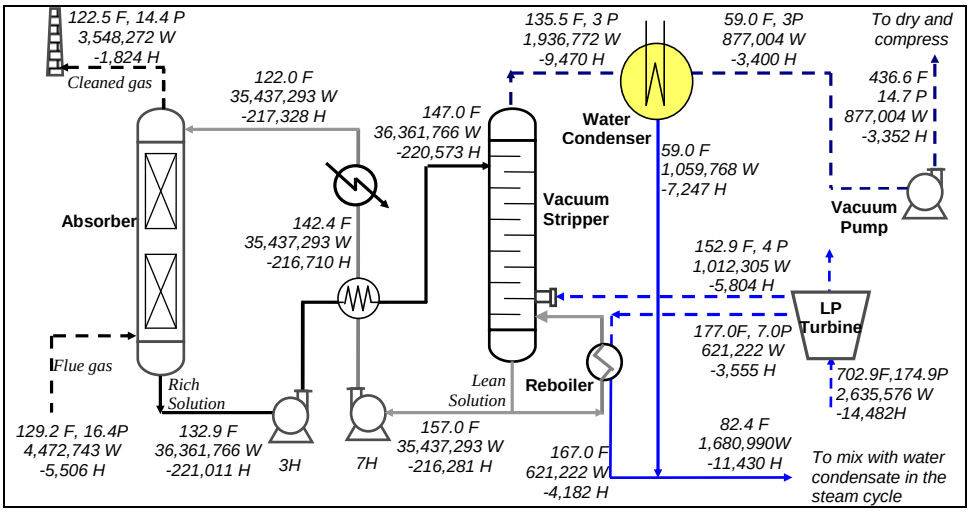

(b) IVCAP process
(20wt% PC, 1% CO_2 lean loading, L/G=1.2 $(L/G)_{min}$, Stripping at 3 psia)

Figure 8. Mass and energy balance simulations of IVCAP and MEA processes.
(F=temperature, °F; P=absolute pressure, psia; W=mass flow, lb/hr; H=enthalpy, Btu/lb)

Results of the MEA process simulation are shown in Figure 8(a). Steam extracted from the IP turbine exit was at 175 psia and was expanded to 60 psia before entering the stripper reboiler. MEA regeneration from the CO_2-rich solution required a heat duty of about 1,400 MMBtu/hr in the reboiler, equivalent to 1,680 Btu/lb CO_2 removed. Mass and heat balances for the IVCAP were simulated for several process scenarios (Table 1). Results of a case study for a 20 wt% PC with 1 wt% CO_2 loading in the lean solution and at a stripping pressure of 3 psia are summarized in Figure 8 (b). The liquid-to-gas mass ratio (L/G) used in this example was 1.2 times the minimum L/G ratio, $(L/G)_{min}$. This L/G ratio (7.92) is roughly double that of the MEA process (3.86).

The energy performances of the power plant equipped with IVCAP and MEA processes were compared (see Table 2). Electricity consumed for CO_2 compressing to 1200 psia was also included. The difference in CO_2 compression work between the two processes is due to different starting pressures (14.7 in the MEA vs. 25 psia in the IVCAP). Electricity loss due to steam extraction in the IVCAP was as low as about 38 MWe, of which 52% was due to stripping steam and 48% due to reboiler steam. However, in the IVCAP, a significant amount of electricity was consumed by the vacuum pump to pressurize the CO_2 stream from vacuum to one atmospheric pressure (14.7 psia). The IVCAP also required large pumps to circulate the absorption solution due to its relatively higher L/G ratio. Overall, a total of about 102 MWe was consumed in the IVCAP compared to 137 MWe in the MEA process, corresponding to an energy saving of about 24%. Calculations for the IVCAP were based on a stripping pressure of 3 psia which is not optimized for minimizing the energy use. Additional process optimization will determine the optimal CO_2 lean loading, L/G ratio, and PC concentration in the IVCAP.

Table 2. Energy use performances of IVCAP and MEA processes for CO_2 capture

	Reference plant w/o CO_2 capture	Reference plant + IVCAP	Reference plant + MEA
CO_2 capture energy use, MWe			
Steam extraction loss	0	37.8	89.4
Gas blower, MWe	0	11.5	10.0
Liquid Pump , MWe	0	2.7	1.8
Vacuum Pump, MWe	0	14.0	n/a
CO_2 compression, MWe	0	37.8	35.4
Power plant auxiliary energy use, MWe	34.7	33.3	32.0
Net electricity output, MWe	492.9	390.5	358.9
Thermal efficiency, %	37.6%	29.8%	27.3%

5. CONCLUSIONS

A potassium carbonate-based absorption process which can be integrated with the power plant's steam cycle is being investigated for post combustion CO_2 capture. The process uses CA enzyme to promote CO_2 absorption rate. CA enzyme was found to be an effective biocatalyst to accelerate the CO_2 absorption into the PC solution. Results from this study revealed:

1) The rates into the 20 wt% PC solution at 300 mg/L enzyme dosage increased 2-10 times at temperatures of 25-50 ^{o}C. The rate could be further increased by increasing the CA dosage to 600 mg/L and above.
2) The rate of CO_2 absorption in the presence of the CA enzyme didn't significantly change with temperature due to the combined temperature effect on the CO_2 solubility and reaction kinetics.
3) CA-promoted rate didn't significantly depend on the CO_2 loading of the PC solution, indicating the rate can maintain high even when the solution has a high level of CO_2 loading during the absorption.
4) One of the tested enzymes demonstrated acceptable thermal stability below 50 ^{o}C. At 40 ^{o}C, the activity of the enzyme degraded only by ~15% over a six-month period. At 50 ^{o}C, the activity loss was about 55% after 2 months.
5) The presence of the major flue gas impurities at high concentrations did not considerably affect the activity and stability of the enzyme. The activity loss was less than 12% over e two-month period.
6) Results from process simulations studies revealed that the IVCAP can potentially reduce the parasitic energy losses associated with CO_2 capture by 20%-30% compared with a conventional MEA process.

ACKNOWLEDGEMENT

This paper is based upon work supported by the Department of Energy under Award Number DE-FC26-08NT0005498, and at the earlier stage by the Illinois Department of Commerce and Economic Opportunity (IDCEO), through the Office of Coal Development (OCD) and the Illinois Clean Coal Institute (ICCI) under Contract No. 08-1/1.1B-3.

DISCLAIMER

This paper was prepared as an account of work sponsored by an agency of the United States Government. Neither the United States Government nor any agency thereof, nor any of their employees, makes any warranty, express or implied, or assumes any legal liability or responsibility for the accuracy, completeness, or usefulness of any information, apparatus, product, or process disclosed, or represents that its use would not infringe privately owned rights. Reference herein to any specific commercial product, process, or service by trade name, trademark, manufacturer, or otherwise does not necessarily constitute or imply its endorsement, recommendation, or favoring by the United States Government or any agency thereof. The views and opinions of authors expressed herein do not necessarily state or reflect those of the United States Government or any agency thereof.

REFERENCES

1. Ciferno, J. P.; Fout, T. E.; Jones, A. P.; Murphy, J. T. Capturing Carbon from Existing Coal Fired Power Plants. *Chem. Eng. Prog.* **2009**, *105*, 33-41.
2. Chen S., Lu Y., Rostam-Abadi M. Integrated Vacuum Absorption Steam Cycle Gas Separation. U.S. Patent Application No. 20070256559, May, 2007.
3. Gibbons, B.H. and J.T. Edsall. Rate of Hydration of Carbon Dioxide and Dehydration of Carbonic Acid at 25°C. *The Journal of Biological Chemistry* **1963**, 238(10): 3502-3506.
4. Bond, G.M., J.S. Donald, K. Brandvold, F.A. Simsek, M.G. Medina, and G. Egeland. Development of Integrated System for Biomimetic CO_2 Sequestration Using the Enzyme Carbonic Anhydrase. *Energy & Fuels* **2001**, 15:309-316.
5. Sirs, J.A. Electrometric Stopped Flow Measurements of Rapid Reactions in Solution. *Trans. Faraday Sot.* **1958**, 54: 201-206.
6. Cullinane J. T., Rochelle G. T. *Fluid Phase Equilibria* **2005**, 227:197-213.
7. Kjxalifah, R.G. The Carbon Dioxide Hydration Activity of Carbonic Anhydrase I. Stop-Flow Kinetic Studies on the Native Human Isoenzymes B and C. *The Journal of Biological Chemistry* **1971**, 246(8): 2561-2573.
8. Lindskog S., Structure and Mechanism of Carbonic Anhydrase, *Pharmacol. Ther*. **1997**, 74(1): 1-20.
9. Mirjafari, P., K. Asghari, and N. Mahinpey. Investigating the Application of Enzyme Carbonic Anhydrase for CO_2 Sequestration Purposes. *Ind. Eng. Chem. Res.* **2007**, 46:921-926.
10. Lu Y., Ye X., Zhang Z., Khodayari A., Djukadi T. Development of a Carbonate Absorption-Based Process for Post-Combustion CO_2 Capture: The Role of Biocatalyst to Promote CO_2 Absorption Rate. *Energy Procedia* **2011**, 4: 1286-1293.
11. P. V. Danckwerts. Gas-liquid reactions. Mc-Graw-Hill, New York; 1970.
12. Cents A.H.G., Brilman D.W.F., Versteeg G.F. Gas Absorption in an Agitated Gas–Liquid–Liquid System. *Chem. Eng. Sci.* **2001**, 56:1075-1083.
13. Pudvay, M. Operating Experience on the Treatment on FGD Scrubber Blowdown from Existing Generating Stations. http://www.degremont-technologies.com/IMG/pdf/tech_infilco_FGD-Experience.pdf, as of April 12, 2012
14. Chemcad Version 6 User Guide, Chemstations, Inc., 2011.
15. Chen, S., Bhagwat S., Rostam-Abadi M. Techno-Economic Studies of Illinois Coal in Future Power Production Processes. Final Technical Report, ICCI Project No. 01-1/2.3C-1, October 2002.