Praxair – OTM-Based Oxy-Combustion

Project Title:

OTM-Based Oxy-Combustion for CO_2 Capture from Coal Power Plants

Technology Area:	**Technology Maturity:**
Oxygen Supply	Laboratory, ~5 liters/minute oxygen

Primary Project Goal:

Praxair is developing membrane hardware and assessing the technical and economic feasibility of an advanced oxy-combustion power cycle that uses a combination of ceramic oxygen transport membranes (OTM) and a cryogenic air separation unit (ASU) to supply the oxygen (O_2) required for combustion.

Technical Goals:

Phase I:

- Develop more detailed OTM cost and performance estimates based on experiments.
- Develop a preliminary conceptual design and cost models for a pilot plant utilizing OTM technology.
- Identify the rate limiting steps for O_2 separation through the OTM and address kinetic or mass transport limitations by appropriate materials selection and membrane architecture.
- Develop procedures to manufacture ⅓ pilot-size OTM tubes; test them for O_2 flux and durability in carbon monoxide (CO), hydrogen (H_2), carbon dioxide (CO_2), and water (H_2O) fuel streams with the presence of sulfur impurities.
- Test OTM membranes in a coal gas OTM reactor.

Phase II (many Phase I tasks will be repeated at pilot-scale):

- Scale up the physical size of the membranes to that required for pilot-scale demonstration.
- Deliver a plan for pilot-testing of the technology that includes the basic engineering design and cost of key components of OTM-based equipment, as well as an update to the system and economic analysis of the proposed cycle.

Technical Content:

As oxy-combustion is currently practiced, a pure stream of O_2 is separated out in an ASU and then delivered to a boiler for combustion. OTM technology integrates O_2 separation and combustion in one unit. An OTM consists of an inert porous support coated with an internal dense gas separation layer, as illustrated in Figure 1. Air contacts the separation layer where molecular O_2 reacts with O_2 vacancies and electrons on the membrane surface to form O_2 ions, which are transported through the separation layer using a chemical potential difference as the driving force. Fuel species (CO, H_2, methane [CH_4] etc.) located on the porous support side diffuse through the support and react with O_2 ions at the membrane surface to form oxidation products (H_2O, CO_2) and O_2 vacancies and electrons in the crystalline lattice structure of the separation layer.

Several process concepts incorporating ceramic OTM are being explored to understand their impact on process economics. One process concept under development is shown in Figure 2. In this process, coal is first gasified in an O_2-blown gasifier to generate synthesis gas (syngas). The syngas is optionally reacted in an OTM partial oxidation reactor to raise its temperature.

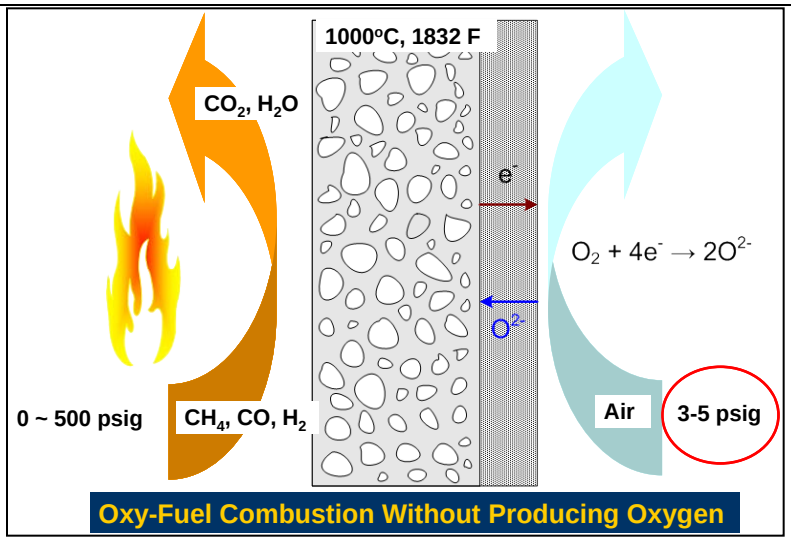

Figure 1: Schematic of Ceramic OTM

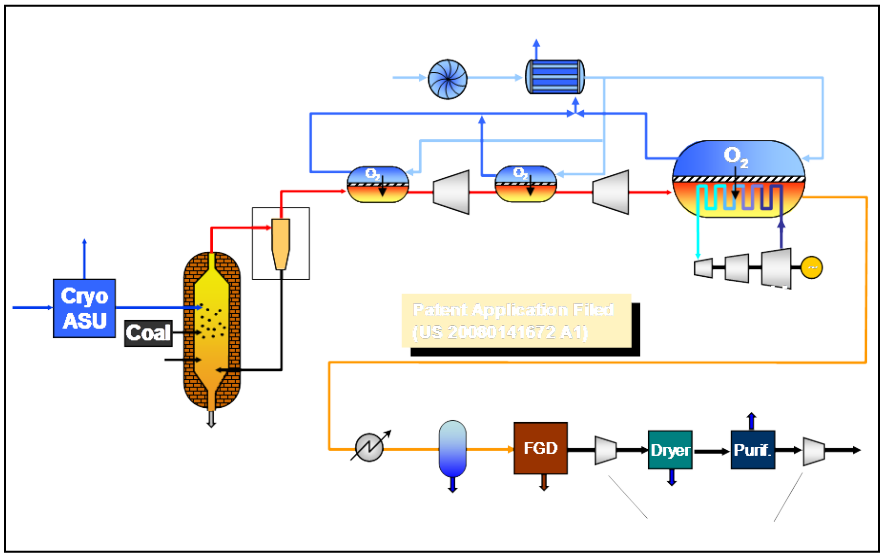

Figure 2: OTM-Based Process for Power Generation with CO_2 Capture

The hot syngas is expanded to recover power. After the syngas is expanded to slightly above the ambient pressure, it is sent to the OTM boiler. Within the OTM boiler, syngas is first passed over an array of OTM tubes. Air is preheated by heat exchange with the O_2-depleted air and then passed on to the inside of the OTM tubes. Oxygen from the air transports across the membrane and reacts with the syngas. Since the rate of O_2 transport is limited by the availability of the membrane area, the oxidation of syngas will take place over a large area (the OTM zone) within the boiler. As the syngas gets oxidized, the driving force for O_2 transport will decrease and the required membrane area will increase. For practical reasons, the OTM will be used to supply O_2 to the fuel side until 80-90% fuel utilization is achieved. The remainder of fuel will be combusted using O_2 supplied from the cryogenic ASU.

The thermal energy released within the boiler is used for steam generation. In the OTM zone, steam tubes will be interspersed with the OTM tubes such that the temperature is maintained at the optimum level for membrane performance. After the fuel is completely oxidized with externally supplied O_2, the flue gas will pass through a convective section of the boiler for further steam generation and boiler feed water preheating. The flue gas exiting the boiler is processed according to a purification process proposed for a conventional oxy-fuel technology.

A number of OTM-based power cycles have been simulated for comparison against the DOE Cost of Electricity (COE) targets. Table 1 illustrates two of these cases, "OTM Case 2" and "OTM Case 5." Included in the table for comparison purposes are two DOE reference cases. The base case for comparison is a DOE pulverized coal air-combustion power cycle (without CO_2 capture). A second DOE case including post-combustion capture (PCC) is also included for comparison with the OTM cases.

Table 1 includes data regarding the net efficiency, plant cost, and COE for three different coal prices. The COE increase over the DOE base case (column one) is calculated and those cases meeting the DOE target of <35% increase in COE are highlighted in green. Note that all OTM cases show substantial improvement over DOE's projections for air-coal power plants with PCC (column two). The high net efficiency, >37% HHV, seen in the OTM cases is a major contributing factor which keeps the COE low in comparison to the PCC case.

Table 1: COE comparison of standard DOE air-coal power cycles with OTM power cycles. OTM Case 2 and Case 5 differ in their treatment of coal impurities.

Case		DOE Base SC	DOE PCC SC	OTM Case 2	OTM Case 5
Net Efficiency (HHV)		39.7	27.2	37.15	37.4
Cost Basis (Year)		3/2008	3/2008	3/2008	3/2008
Plant Cost ($/kW)		$1,908	$3,488	$2,858	$2,834
	Coal Price ($/MMbtu)				
COE ($/MWh)	1.8	$70.5	$115.2	$97.0	$94.6
	3	$82.9	$133.2	$110.2	$107.7
	4	$93.2	$148.3	$121.3	$118.7
COE % increase over base	1.8		63.4%	37.6%	34.2%
	3		60.7%	32.9%	29.9%
	4		59.1%	30.2%	27.4%

Technology Advantages:

Unit power consumption for supplying O_2 (kWh/ton of O_2) to the oxy-fuel combustion process is reduced by more than 70%. This results in a step change in efficiency improvement and decrease in COE for a power plant that enables CO_2 capture.

In a conventional oxy-fuel process, the efficiency of the power plant will drop by 9-10%. Due to such a large efficiency penalty, the cost of CO_2 avoided will be 25-30% higher than the cost of CO_2 captured. In comparison, the efficiency drop for the OTM-based power cycle will be only 2-3%. As a result, the cost of CO_2 avoided would be within 10% of the cost of CO_2 captured.

R&D Challenges:

- Reliability of the OTM tubes at high pressure.
- Achieving membrane cost and performance targets.
- Engineering design of OTM equipment.

Results To Date/Accomplishments:

- Improved OTM performance by a factor of two to three.

- Observed stable OTM performance in the presence of hydrogen sulfide (H_2S) and carbonyl sulfide (COS).
- Power cycle process economics meet or exceed DOE goals of <35% increase of COE for coal power plant with CCS.

Next Steps:

- Demonstrate stable operation of the coal-fueled OTM reactor.
- Cost estimates for a pilot-scale demonstration and cost projections for a commercial-scale OTM.
- Target O_2 flux and reliability for pilot-scale OTM.

Final test results will not be available until the December 2010 project completion date.

Available Reports/Technical Papers/Presentations:

March 2009 Presentation at the CO_2 Capture Technology for Existing Plants Conference in Pittsburgh, Pennsylvania.

Contract No.:	**NETL Project Manager:**
DE-FC26-07NT43088	Timothy Fout timothy.fout@netl.doe.gov
Principal Investigator:	**Partners:**
Maxwell Christie max_christie@praxair.com Praxair, Inc. – Tonawanda, New York	The University of Utah ENrG Inc.