Project Title:

Novel Concepts for the Compression of Large Volumes of CO_2

Technology Area:	**Technology Maturity:**
Compression	Pilot, 90 tonnes/hr

Primary Project Goal:

Southwest Research Institute (SwRI) is examining methods of boosting the pressure of carbon dioxide (CO_2) from pulverized coal (PC), oxy-combustion, and integrated gasification combined cycle (IGCC) plants to pipeline pressures with minimum parasitic energy expended.

Technical Goals:

- Conduct thermodynamic and economic analysis to determine the preferred CO_2 state for compression.
- Identify and evaluate intercooling concepts.
- Develop preliminary intercooling design.
- Calculate total potential energy savings.
- Complete a comprehensive thermodynamic and cost analysis of an IGCC plant incorporating the new compression technology.
- Design a two-stage compressor test rig based on the analyses and design studies.
- Design, fabricate, and test a multi-stage pump test rig based on the analyses and design studies.
- The tests include:
  - Power requirements.
  - Vibrations.
  - Temperatures.
  - Seal flows.
  - Incidences of cavitation.
  - Net positive suction head test.

Technical Content:

Like work, power is path dependant, meaning that how a compressor operates will determine the total power that it consumes. Figure 1 shows how two compression processes can achieve the same pressure, but still consume different quantities of power. The isothermal compression, even at 60% efficiency, is preferable to isentropic compression at 100% efficiency.

Project Title:

Novel Concepts for the Compression of Large Volumes of CO_2

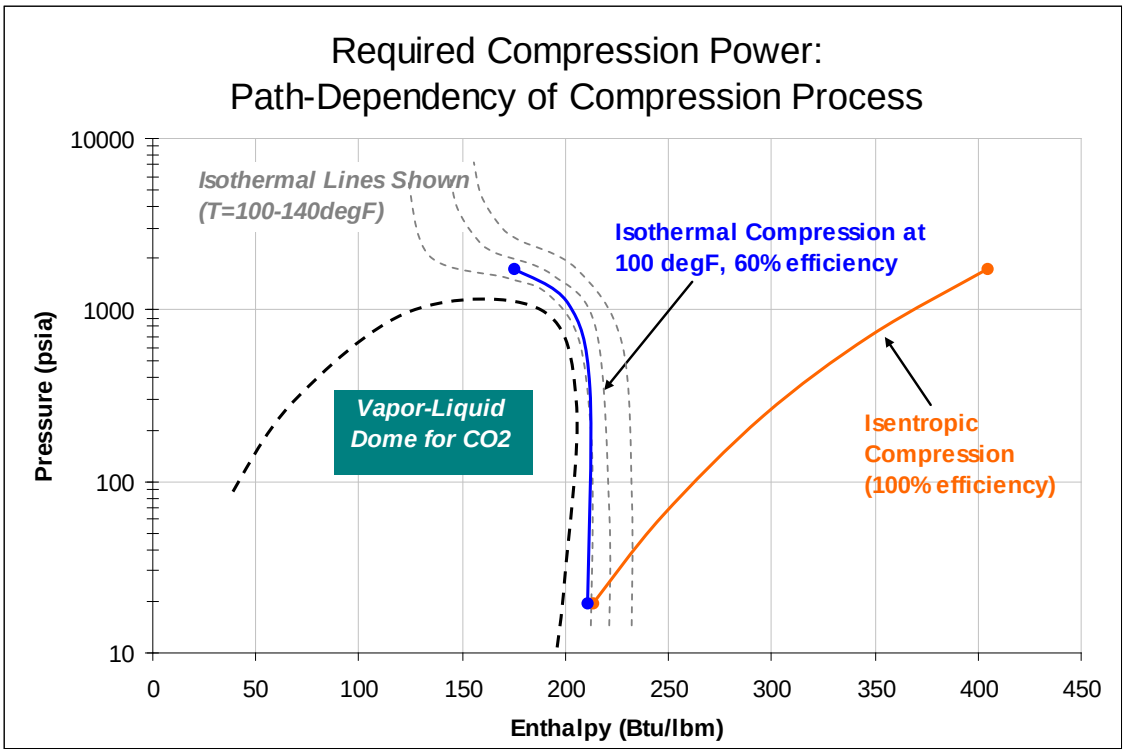

Figure 1: The Path Dependency of Compression Power

SwRI has examined a number of different compression options to find the ones that would consume the least amount of power. It was found that compressing CO_2 while simultaneously cooling it to approximate isothermal compression would lower power consumption. Following liquefaction, the pressure of the liquid CO_2 could then be further increased using a pump for total low power consumption.

Project Title:

Novel Concepts for the Compression of Large Volumes of CO_2

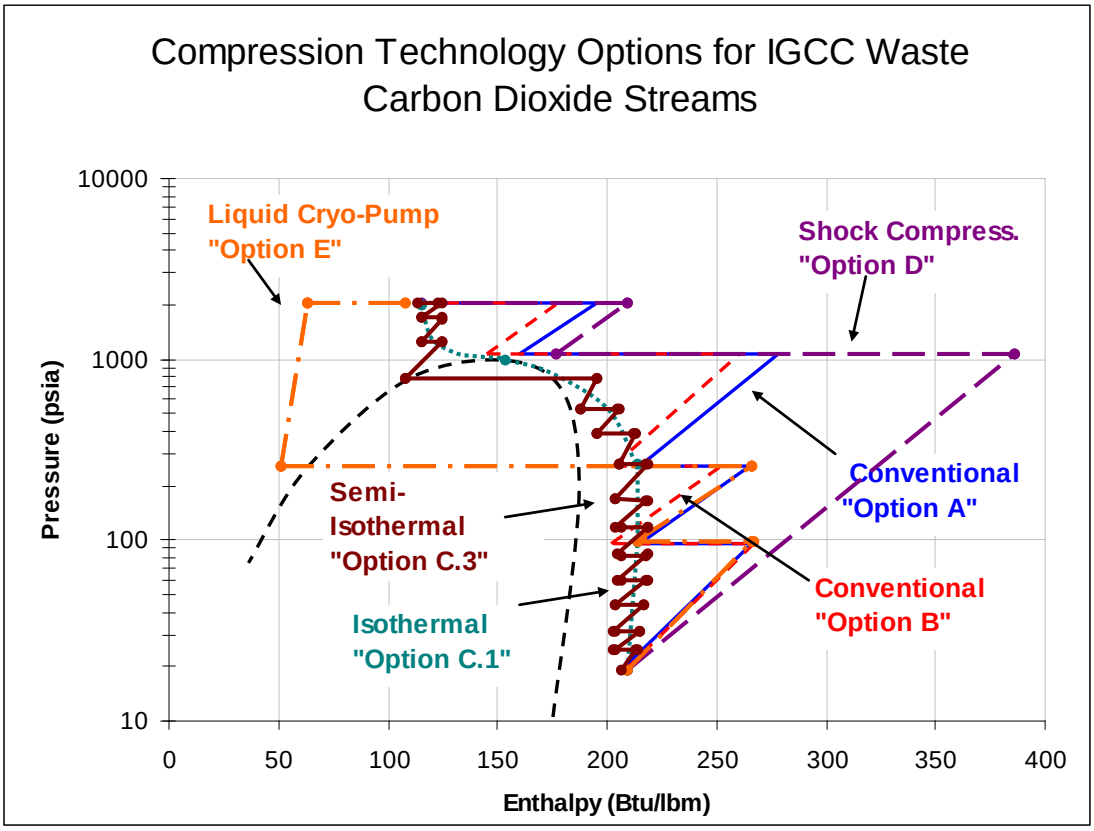

Figure 2: Required Compression Power for the Investigated Technology Options

Table 1: Comparison of Compression Technologies

Option	Compression Technology	Power Requirements	% Diff from Option A	Cooling Technology
A	Conventional Dresser-Rand Centrifugal 10-stage Compression	23,251 BHP	0.00%	Air-cool streams between separate stages
B	Conventional Dresser-Rand Centrifugal 10-stage Compression with additional cooling	21,522 BHP	-7.44%	Air-cool streams between separate stages using ASU cool N2 stream
C.1	Isothermal compression at 70 degF and 80% efficiency	14,840 BHP	-36.17%	Tc = 70 degF inlet temp throughout
C.4	Semi-isothermal compression at 70 degF, Pressure Ratio ~ 1.55	17,025 BHP (Required Cooling Power TBD)	-26.78%	Tc = 70degF in between each stage.
C.7	Semi-isothermal compression at 100 degF, Pressure Ratio ~ 1.55	17,979 BHP (Required Cooling Power TBD)	-22.67%	Tc = 100degF in between each stage.

Project Title:

Novel Concepts for the Compression of Large Volumes of CO_2

Option	Compression Technology	Power Requirements	% Diff from Option A	Cooling Technology
D.3	High ratio compression at 90% efficiency - no inter-stage cooling	34,192 BHP	47.06%	Air cool at 2215 psia only
D.4	High ratio compression at 90% efficiency - intercooling on final compression stage	24,730 BHP	6.36%	Air cool at 220 and 2215 psia
E.1	Centrifugal compression to 250 psia, Liquid cryo-pump from 250-2215 psia	16,198 BHP (Includes 7,814 BHP for Refrigeration) [1]	-30.33%	Air cool up to 250 psia, Refrigeration to reduce CO2 to -25degF to liquify
E.2	Centrifugal compression to 250 psia with semi-isothermal cooling at 100 degF, Liquid cryo-pump from 250-2215 psia	15,145 BHP (Includes 7,814 BHP for Refrigeration) [1]	-34.86%	Air cool up to 250 psia between centrifugal stages, Refrigeration to reduce CO2 to -25degF to liquify

Option E.2 was selected as the most desirable.

Figure 3 shows a design for an internally cooled compressor. The flow of the CO_2 is shown in red, while the cooling liquid is shown in blue.

Project Title:

Novel Concepts for the Compression of Large Volumes of CO_2

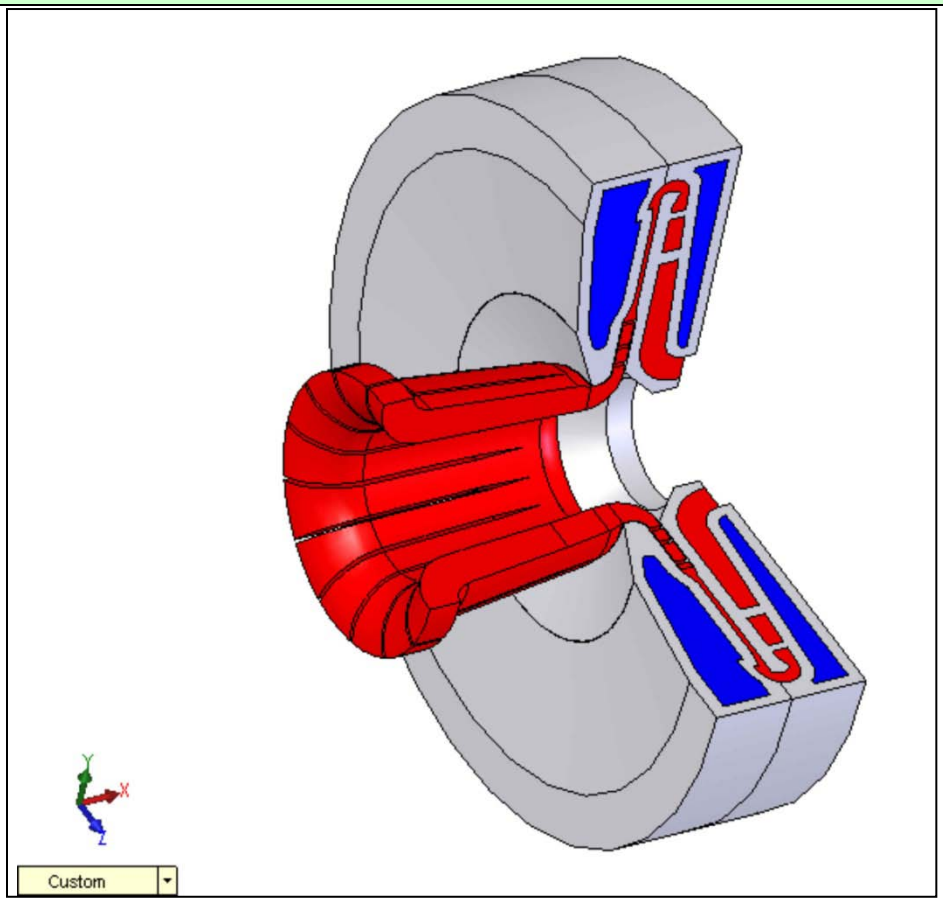

Figure 3: Design for an Internally Cooled Compressor

Technology Advantages:

- New compression process could use up to 35% less power.
- Applicable to all types of power plants.
- Could result in significant capital savings compared to an integrally geared compressor.
- Pump operating costs will be lower than high-pressure compressor operating costs.

R&D Challenges:

- There will be a wide range of CO_2 output from the power plant based on required electrical output.
- CO_2 compression technology must have high reliability.
- IGCC plants contain multiple CO_2 streams at different pressures.

Results To Date/Accomplishments:

- Conducted a thermodynamic and economic analysis to determine the preferred CO_2 state for compression.

Project Title: **Novel Concepts for the Compression of Large Volumes of CO_2**	
• Calculated total potential energy savings. • Created detailed designs for compressor and pump.	
Next Steps: • Optimize and verify the compressor and pump designs. • Fabricate and assemble the prototype compressor and pump. • Conduct functional tests of prototypes. Final test results will not be available until the April 2010 project completion date	
Available Reports/Technical Papers/Presentations: Presentation at Annual NETL CO_2 Capture Technology for Existing Plants R&D Meeting in March 2009 in Pittsburgh, Pennsylvania.	
Contract No.: DE-FC26-05NT42650	**NETL Project Manager:** Timothy Fout Timothy.Fout@netl.doe.gov
Principal Investigator: Jeffery Moore Southwest Research Institute jeff.moore@swri.org	**Partners:** Dresser-Rand, BP