ALSTOM'S OXYGEN-FIRED CFB TECHNOLOGY DEVELOPMENT STATUS FOR CO_2 MITIGATION

Gregory N. Liljedahl
(greg.n.liljedahl@power.alstom.com; 860-285-4833)
David G. Turek
(david.g.turek@power.alstom.com; 860-285-2128)
Nsakala ya Nsakala
(nsakala.y.nsakala@power.alstom.com; 860-285-2018)
Nancy C. Mohn
(nancy.c.mohn@power.alstom.com; 860-285-5748)

ALSTOM Power Inc.
2000 Day Hill Road
Windsor, CT, USA 06095

Timothy E. Fout
(timothy.fout@netl.doe.gov; (304) 285-1341)

U.S. Department of Energy, National Energy Technology Laboratory

3610 Collins Ferry Road
P.O. Box 880
Morgantown, WV 26507-0880

Paper Presented at the
31st International Technical Conference on
Coal Utilization & Fuel Systems
May 21-25, 2006
Clearwater, Florida, USA

ABSTRACT

ALSTOM Power Inc. (ALSTOM) is actively working to develop advanced circulating fluidized bed (CFB) technologies for the purpose of CO_2 mitigation. One promising near term technology currently being investigated at ALSTOM is the oxygen-fired CFB.

The oxygen-fired CFB is a CO_2 capture technology, which uses oxygen mixed with recirculated flue gas (mostly CO_2) to provide a combustion medium for the fuel. The oxygen may be supplied today by a cryogenic air separation unit, or in the future by more efficient processes such as oxygen transport membrane. The oxygen-fired combustion process produces a flue gas stream composed mostly of CO_2 and H_2O vapor. Simple condensation of most of the water vapor yields a CO_2-rich product stream, which can be simply compressed for sequestration or further purified for use in enhanced oil recovery or enhanced coal bed methane.

Pilot scale testing has been done with one bituminous coal and one petroleum coke for a total of about three hundred hours in O_2/CO_2 mixtures containing up to 50% oxygen by volume. Pertinent issues such as furnace operability and temperature control, heat transfer, recarbonation, criteria and trace gaseous emissions, and unburned carbon emissions have been satisfactorily addressed. The previous techno-economic work for this technology has entailed conceptual design, plant performance, cost, and economic analysis for a Greenfield 210 MWe-gross CFB plant.

This paper discusses ALSTOM's latest work in development of the O_2 fired CFB, and provides a brief summary of background information on the previous work, carried out under the auspices of the US Department of Energy/National Energy Technology Laboratory. More specifically, the latest work includes additional pilot-scale CFB testing in a 3.0 MW_{th} (9.9 MMBtu/lb) facility for concept validation, and a techno-economic study involving the retrofit of a small (90 MWe) existing CFB to oxygen firing and CO_2 capture in preparation for ALSTOM's next major step - large-scale demonstration of the technology. ALSTOM has not identified any technical barriers with this technology.

BACKGROUND

Over the past eight years, ALSTOM has conducted more than sixteen studies on CO_2 control technologies. These studies have been sponsored by ALSTOM, U.S. and European government agencies, and private industry. This paper presents the latest information from an ongoing study - **Greenhouse Gas**

Emissions Control by Oxygen Firing in Circulating Fluidized Bed Boilers (2001 – 2006) - sponsored jointly by ALSTOM and the U.S. Department of Energy.

In **Phase I** of this study, which was performed during 2001-2003, ALSTOM developed conceptual designs, performance, and economics for 13 power generation concepts (Marion, et al, 2003). These concepts included both combustion and gasification technologies with and without CO_2 control. The study identified the oxygen-fired CFB concept as an attractive near-term technology for CO_2 control. Phase I also included bench-scale fluidized bed combustion tests with coal and petroleum coke burned in O_2/CO_2 mixtures. Subcontractors used in the techno-economic study included Parsons (Balance of Plant and IGCC cases), ABB Lummus (Gas Processing Systems), and Praxair (Cryogenic and Oxygen Transport Membrane air separation systems).

In **Phase II** of this study, which was performed during 2003-2004, the oxygen-fired CFB was successfully tested in ALSTOM's 9.9 MMBtu/hr (3.0 MW_{th}) Multiuse Test Facility pilot plant. Based on the pilot plant test results, the oxygen-fired CFB plant conceptual design from Phase I was updated (Nsakala, Liljedahl, and Turek, 2004).

This paper describes work completed in the next phase of the study entitled "Commercialization Development of Oxygen Fired CFB for Greenhouse Gas Control", which is being executed during 2004-2006. This work comprises additional pilot scale testing in ALSTOM's Multiuse Test Facility (3.0 MW_{th}) and a conceptual design and techno-economic analysis for the retrofit of a small, 90 MWe existing CFB unit to O_2 firing and CO_2 capture.

PILOT SCALE TEST RESULTS AND DATA ANALYSIS

Overview

Table 1: Test Campaigns

April 2004	June 2004	June 2005
Bituminous	Bituminous, Petcoke	Bituminous, Petcoke
Limestone	Aragonite	Lime, Limestone, Aragonite
2.2 - 4.8 MMBtu/hr (0.6-1.4 MW_{th})	4.2 - 7.9 MMBtu/hr (1.2-2.3 MW_{th})	9.9 MMBtu/hr (3.0 MW_{th})
Air fired, 20 - 30% O_2 Mixtures	O_2-fired, 40 - 50% O_2 Mixtures	Air-fired, 30% O_2 Mixture

Three pilot scale test campaigns were run in order to evaluate the suitability of O_2 firing in CFB boilers (Table 1). In April and June 2004, ALSTOM tested a medium volatile bituminous coal and a shot petroleum coke. These tests were conducted with air firing and with O_2/CO_2 mixtures up to 50% oxygen overall (70% O_2 locally). Most of the tests were run with furnace temperatures of around 900°C (1650°F) in order to insure calcination of the limestone. This is higher than the typical air-fired temperature for bituminous coal but comparable to the normal temperature for pet coke. The third test campaign was conducted in June 2005. The objectives of this testing were to demonstrate sulfur capture with the Flash Dryer Absorber (FDA), to evaluate the performance of a moving bed heat exchanger, to determine the impact of oxygen firing on mercury and other trace element emissions, to determine the effect of combustion staging and ammonia injection on NOx emissions, and to evaluate convection pass heat transfer performance.

The Multiuse Test Facility Pilot Plant Description

The Multiuse Test Facility (MTF) shown in Figure 1 is located in ALSTOM's Power Plant Laboratories facilities in Windsor, Connecticut. This facility has the flexibility to perform pilot-scale testing with conventional pulverized-coal firing, fluidized bed combustion, and gasification firing conditions. The MTF allows testing with both circulating and bubbling fluidized bed conditions, as well as various other conditions being considered for advanced processes. The facility provides detailed data on heat transfer, hydrodynamics, combustion, sulfur capture and process control.

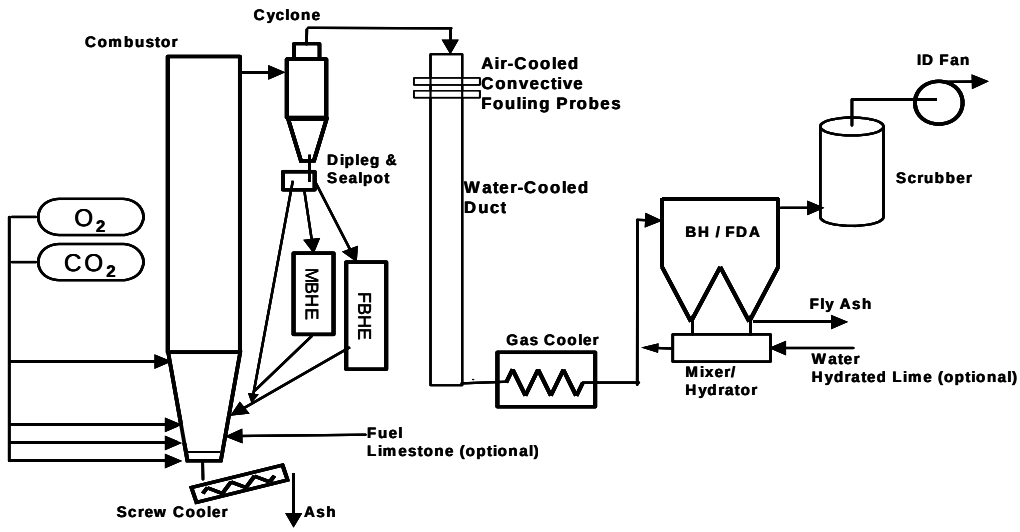

Figure 1: Schematic of Multiuse Test Facility

The MTF is designed and permitted for a firing rate of 3.0 MW_{th} (9.9 MMBtu/hr) of coal, petroleum coke, biomass, oil, or gas. The furnace is 18 m (60 feet) tall with 1 m (40") inner diameter. The facility includes a cyclone, sealpot, and external fluidized bed and moving bed heat exchangers (FBHE and MBHE, respectively) to complete the circulating fluidized bed system. The flue gas is cleaned in a baghouse and a wet caustic scrubber for final particulate and SO_2 removal to meet local emissions limits. The baghouse includes an integrated Flash Dryer Absorber (FDA) system. The MTF has a dedicated, commercial distributed control system for facility control and data acquisition.

Table 2: MTF Pilot Tests Fuel Analyses

	Bituminous Coal	Petroleum Coke
As-Fired, wt.%		
Volatile Matter	16.7	9.1
Fixed Carbon	63.4	89.0
Moisture	4.5	0.4
Ash	15.4	1.5
Hydrogen	3.8	3.7
Carbon	70.1	87.1
Sulfur	1.4	5.4
Nitrogen	1.6	1.6
Oxygen	3.2	0.3
HHV, Btu/lb	12107	14949
HHV, MJ/kg	28.2	34.8

Test Results

The circulating fluid bed pilot plant ran well in all three test campaigns. Results of the 2004 tests have been reported in more detail by Nsakala, Liljedahl, and Turek, (2004). A similar report covering the 2005 test results has been submitted to the DOE (Nsakala, Liljedahl, and Turek, 2005). A summary of some key results is presented below.

The analyses for the coal and pet coke tested are given in Table 2 and oxidants, fuels, and sorbents are identified in Table 3. The following technical issues were investigated at the pilot scale in ALSTOM's 3.0 MW_{th} (9.9 MMBtu/hr) Multiuse Test Facility. These technical issues are summarized in Table 4 and are briefly discussed below.

Table 3: 2005 MTF Test Series

Oxidant	Fuel	Sorbent
Air -Fired	med vol bit	Lime to FDA
30/70 O_2/CO_2	med vol bit	Lime to FDA
Air -Fired	med vol bit	Limestone to Furnace
30/70 O_2/CO_2	med vol bit	Limestone to Furnace
30/70 O_2/CO_2	pet coke	Aragonite to Furnace

Operability - The circulating fluid bed pilot plant ran well. There were no agglomeration or other problems in the lower combustor where the local oxygen concentration was up to 70%.

Agglomeration – Combusting with enriched oxygen can lead to very high surface temperatures of burning coal particles - in some cases hot enough for the fuel ash to become sticky or to melt. The high fluidizing velocities and the large excess of inert ash should prevent problems with large-scale

agglomeration and de-fluidization. The 2004 pilot tests confirmed this with up to 70% oxygen enrichment locally at the fluidizing nozzles.

Table 4: Pilot Plant Technical Issues

ISSUE	2004	2005
OPERATION	– Agglomeration at high local O_2 – Recarbonation	– Recarbonation – Zero limestone injection into the furnace
SULFUR CAPTURE	– In-furnace w/ limestone	– In-furnace w/ limestone – Backend (FDA) w/ fly ash and fresh lime
OTHER EMISSIONS	– NO_x, CO, N_2O	– NO_x, CO, N_2O – Total Hydrocarbons (THC) – Ammonia (SNCR) for NO_x reduction – Mercury and other trace metals
HEAT TRANSFER	– In-furnace	– In-furnace – Convective pass - heat transfer and fouling – MBHE - heat transfer and operation

Heat Transfer - The higher CO_2 and H_2O concentrations with oxygen firing increase the non-luminous radiation heat transfer from the gas. A slight increase in convective heat transfer was observed in the 2005 tests. No difference was seen between air and oxygen firing for in-furnace heat transfer and in the external moving bed heat exchanger (MBHE). This was expected, as solids are the dominant heat transfer medium, overwhelming any change in gas radiative properties. There was no change with time in the MBHE due to fouling of the heat transfer surface, or loss of solids flow due to agglomeration.

Recarbonation - Limestone is often added to the fluid bed to capture SO_2 from the flue gas. In order to capture sulfur, the calcium carbonate in the limestone must first be calcined to calcium oxide: $CaCO_3$ + heat $\rightarrow$ CaO + CO_2. Figure 2 shows the temperature required to calcine the limestone as a function of the CO_2 content in the flue gas. With air firing, the CO_2 content of the flue gas is under 20%. Limestone will calcine at about 790 °C (1450°F), which is well below the typical CFB operating temperatures.

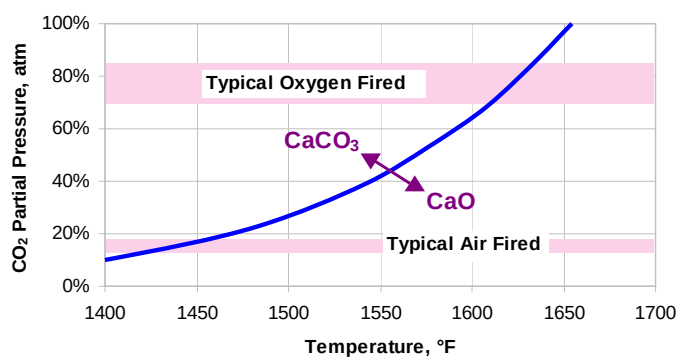

Figure 2: Equilibrium Temperature for Calcination

With oxygen firing, however, the CO_2 content is above 70%. This requires a combustor temperature above 870 °C (1600°F) for calcination to occur. In those locations where the temperature drops below the calcination temperature (e.g., the external heat exchanger and the convective pass) the reverse reaction – recarbonation – occurs. The 2005 pilot campaign included tests with no limestone injection into the furnace to avoid recarbonation-related problems. Sulfur capture was done entirely in the backend FDA system using fresh lime feed. Other options to avoid recarbonation include fluidizing the external heat exchanger (EHE) with air or nitrogen rather than recycled flue gas (mostly CO_2).

The MTF has a water-cooled cyclone and dipleg (Figure 1); this cooled the recirculating solids such that the dipleg and sealpot were usually below the calcination temperature. When the sealpot was fluidized with pure CO_2, the CaO in the ash recarbonated to form $CaCO_3$. In fact, this recarbonation used up all the fluidizing CO_2, so the sealpot did not operate. For the pilot tests, it was necessary to fluidize the sealpot with air. In a commercial unit with uncooled cyclone, the sealpot temperature is typically at least as high

as the furnace temperature. Hence, recarbonation would not occur even if the sealpot were fluidized with recycled flue gas (mainly CO_2).

In the air-fired tests, up to 4% of the calcium in the fly ash recarbonated as the flue gas cooled below the calcination temperature. In the oxygen-fired tests, up to 20% of the calcium in the fly ash showed up as $CaCO_3$ due to the higher CO_2 content of the flue gas.

Sulfur Capture - There is generally an optimum temperature for sulfur capture in a fluidized bed. For bituminous coals, the optimum is around 850°C (1560°F). Lower rank fuels such as lignite usually have a lower optimum temperature; anthracite and petroleum coke often show improved sulfur capture up to 1650°F and beyond. For oxygen firing, the furnace should be above 900°C (1650°F) to allow calcination (assuming limestone injection is used). Except for pet coke and anthracite, the ability to capture sulfur in the furnace will suffer at these high temperatures, requiring more of the sulfur removal in a backend system such as FDA.

The limestone feed rate was maintained at a calcium-to-sulfur ratio of about 2.0 throughout all the tests. The results summarized here are all with Aragonite, which is a very reactive sorbent. With O_2 firing and bituminous coal, the in-furnace sulfur capture ranged from 72 to 96%. With air firing at the normal temperature of 850°C (1560°F), sulfur capture would be greater than 95% in the pilot plant with the same fuel and limestone. With pet coke the sulfur capture was 94 to 98%.

Further sulfur capture can be achieved in a back-end scrubber, such as ALSTOM's FDA. Testing of the FDA with oxygen firing and bituminous coal was included in the MTF tests in Spring 2005. Overall sulfur capture ranged from 79 to 98%, whereas with pet coke the range was from 94 to over 99%.

Nitrogen Oxides – There are three main sources of NO_x emissions from coal combustion:

- Thermal NO_x forms by dissociation of elemental nitrogen (N_2) in the air at combustion temperatures of about 1370°C (2500°F) or higher.
- Prompt NO_x is also formed from reaction of elemental nitrogen in the air with hydrocarbon fragments. This occurs at fluidized bed temperatures.
- Fuel NO_x forms from the oxidation of nitrogen compounds in the fuel.

NO_x formed by any of these mechanisms can be converted to elemental N_2 by reducing agents such as CO, ammonia, hydrogen, and char. This is enhanced in the furnace by staging the combustion conditions.

The NO_x emissions were significantly lower with oxygen firing due to the much lower nitrogen content in the gas - see Figure 3. For both air and oxygen firing with bituminous coal, NO_x was higher with limestone to the furnace. This is a typical effect, but for these tests it may be partly due to higher temperature. NO_x emissions are usually lower in a commercial unit because of poorer mixing (i.e., more staging) in large units.

At the low NO_x levels with oxygen firing, ammonia injection into the upper furnace could reduce the NO_x further, but it required high stoichiometric ratios of added ammonia. This could lead to ammonia slip problems, though slip was not measured in the tests.

Nitrous Oxide - N_2O emissions decrease strongly with increasing combustor temperature. This is likely the effect shown in Figure 3, rather than a difference between air and oxygen firing. N_2O emissions were higher with limestone injection into the furnace.

Carbon Monoxide - At the same temperatures, the CO emissions were higher in the oxygen-fired tests due to the high CO_2 content of the flue gas - see Figure 3.

Total Hydrocarbons - THC emissions from these test points showed no obvious effects other than a decrease with high temperature - see Figure 3.

Mercury and other Trace Metals - The levels of mercury and other trace metals at the baghouse inlet were similar for air and oxygen firing with the medium volatile bituminous coal. Leaving the baghouse, the levels were lower for oxygen firing.

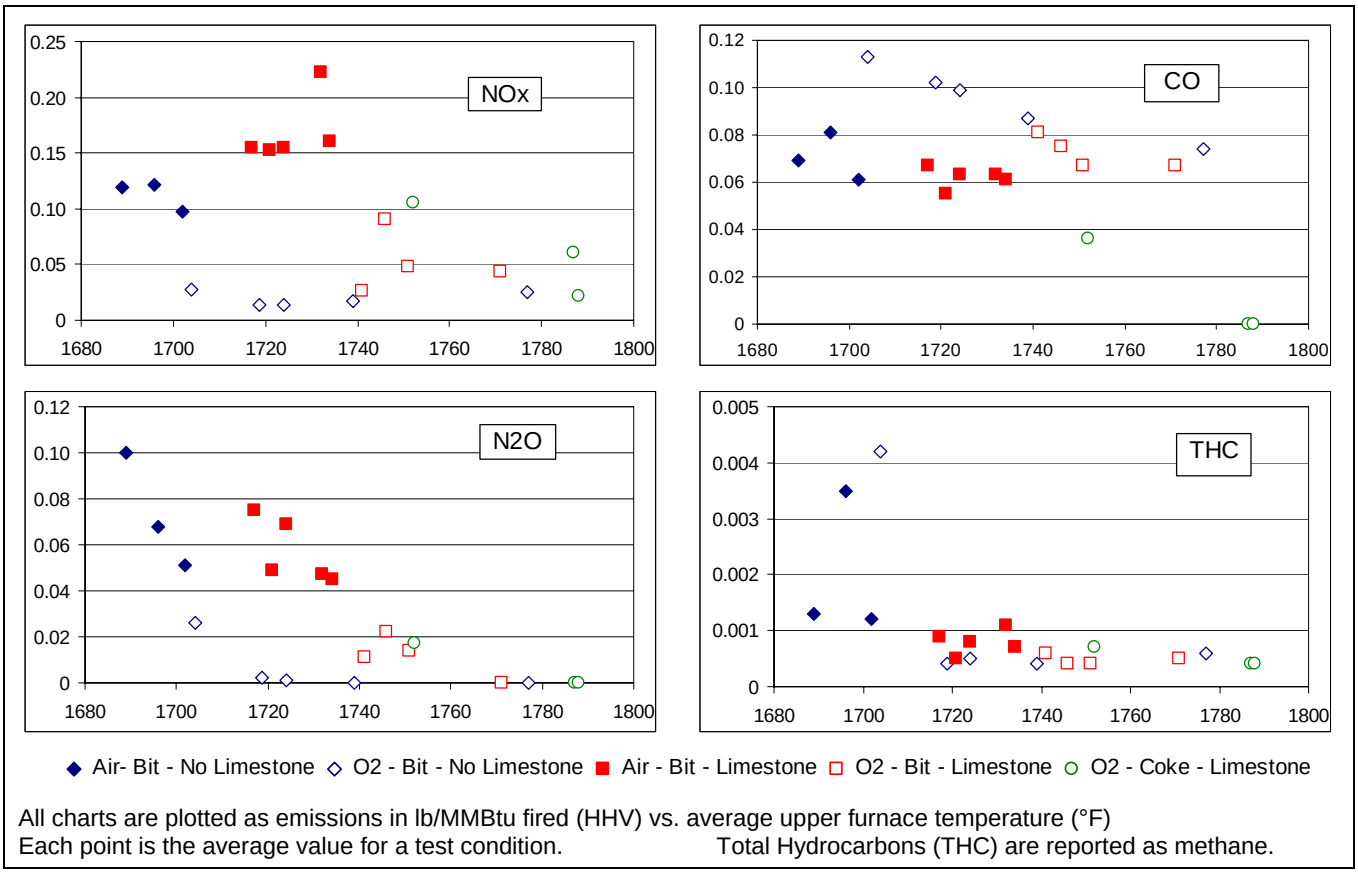

Figure 3: Summary of Emissions from 2005 MTF Tests

TECHNO-ECONOMIC EVALUATIONS

In ALSTOM's previous techno-economic studies (Nsakala, Liljedahl, Turek, 2004), a 210 MWe-gross Greenfield steam plant using an O_2 fired CFB with CO_2 capture was investigated. In the current work a relatively small existing CFB (98 MWe-gross; 90 MWe-net) was used as the basis for a conceptual retrofit design for O_2 firing and CO_2 capture. This retrofit study is in preparation for a near future technology demonstration – an important next step in the development of this technology.

The primary results for this techno-economic evaluation are presented in terms of plant performance, cost requirements, and economic analyses. Descriptions of the major processes and of the major equipment used for these processes are also provided. The performance of the power plant both before and after retrofit to O_2 firing and CO_2 capture is presented and compared.

Case Studies:

This section provides a brief summary of the technical and economic evaluation results from the two related case studies: **Case-1 -** an existing air fired CFB steam plant (Base Case), and **Case-2 -** a retrofit of the Case-1 CFB steam plant with oxygen firing and CO_2 capture. Further descriptions of these two cases are presented below.

Case-1: This case represents an existing CFB steam power plant without CO_2 Capture. This case is a conventional air-fired CFB based steam power plant using a subcritical pressure steam cycle with the following steam conditions: 138 barg / 538°C / 538°C, 7.6 cm Hga (2,000 psig / 1,000°F / 1,000°F,

3.0 in. Hga). This case was included in the study to provide a reference point for comparison of performance and economic results. It also defines the existing plant to which the retrofit technology for O_2 firing and CO_2 capture are applied.

Case-2: This case represents the retrofit of Case-1 to oxygen firing with CO_2 Capture. In oxygen-fired CFB, the combustion air is replaced with a mixture of oxygen and recycled flue gas. This eliminates most of the atmospheric nitrogen, therefore the flue gas consists of primarily CO_2 and H_2O vapor. The flue gas stream can be further processed (through rectification or distillation, depending on the CO_2 product specification) into a high purity CO_2 end product for various uses such as Enhanced Oil Recovery (EOR), Enhanced Gas Recovery (EGR), or simply dried and compressed for sequestration. This retrofit study assumed production and sale of CO_2 for an EOR application.

This is a relatively near term CO_2 capture concept where significant cost savings are realized for the Gas Processing System equipment, plant thermal efficiency is improved, and net plant output reductions are lower, as compared to current commercially available amine based CO_2 capture systems (Bozzuto, et al, 2001).

<u>Case-2 Boiler Island Process Description.</u> Figure 4 shows a simplified process flow diagram for the Boiler Island of the Case-2 oxygen-fired CFB retrofit concept. This process description briefly describes the function of the major equipment and systems included within the Boiler Island excluding the Air Separation Unit (ASU) and Gas Processing System (GPS). The Boiler Island process is similar to that of air fired CFB's. Coal is reacted with a preheated mixture of oxygen and recirculated flue gas in the Combustor section of the CFB system. The oxygen supply is provided from a new cryogenic ASU.

The products of combustion leaving the combustor - flue gas composed of primarily CO_2 and H_2O vapor with small amounts of O_2, N_2, SO_2, and other trace compounds, ash, and other unreacted hot solids - flow through the cyclones where most of the hot solids are separated from the gas stream. The hot solids are recirculated to the combustor through two parallel paths as described below. The temperature in the combustor is controlled to the appropriate level by properly splitting the flow of hot recirculated solids leaving the cyclones. The solids leaving the cyclone are split between an uncooled stream, which flows directly back to the combustor, and a stream flowing through the external heat exchangers (EHE's) where the solids are cooled before being returned to the combustor. Exchanging heat with the power cycle working fluid in the EHE's cools the hot solids.

Draining hot solids from the combustor through the water-cooled ash coolers controls the solids inventory in the system while effectively recovering heat from the hot ash. The cooling water used for the ash coolers is provided from the feedwater stream leaving the final extraction feedwater heater of the steam cycle.

The flue gas leaving the cyclones is cooled in Superheater, Reheater, and Economizer sections located in the convection pass of the system, also by exchanging heat with the power cycle working fluid. The flue gas leaving the convection pass is further cooled in an air heater. The oxygen stream leaving the new ASU is proportionally split and mixed with primary and secondary streams of recirculated flue gas and the mixtures are preheated in the air heater. The quantity of recirculated flue gas used is adjusted to provide proper fluidization for the bed and other equipment in the CFB system requiring a fluidizing medium.

The flue gas leaving the air heater is cleaned of fine particulate matter and SO_2 in the modified Particulate Removal and Flash Dryer Absorber (FDA) system. A new Gas Cooler is used to cool the gas before the flue gas enters the Induced Draft (ID) Fan. The Gas Cooler is used to cool the flue gas to as low a temperature as is possible, about 38°C (100°F), using a direct contact water system, before recycling. This is done to minimize the power requirements for the draft system and the product gas compression system, which is part of the Gas Processing System (GPS). Some H_2O vapor is condensed out of the flue gas in the Gas Cooler. The flue gas leaving the ID Fan - mostly CO_2 - is split, with about 20 percent of the flue

gas going to the product stream for further processing for an EOR application. The remaining 80% of the flue gas is recirculated to the CFB system.

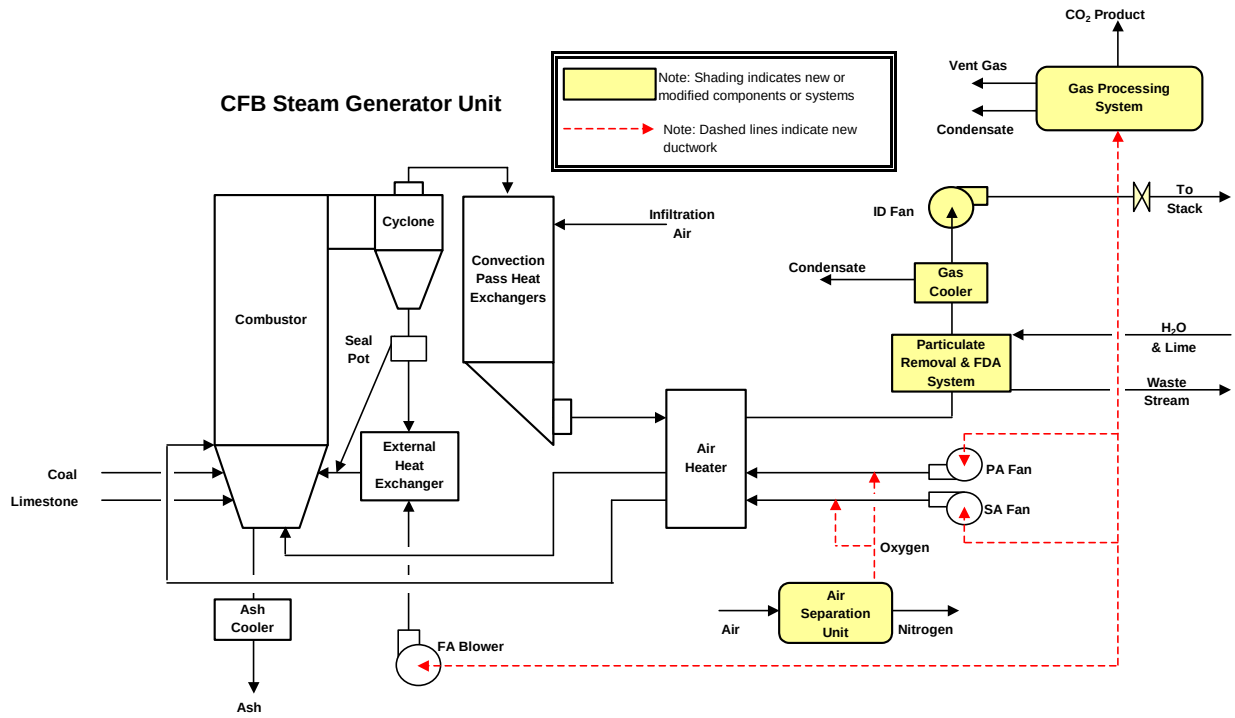

Figure 4: Case-2 Simplified Boiler Island Gas Side Process Flow Diagram

<u>Gas Processing System and CO_2 Product Specification:</u> The CO_2 capture system for Case-2 was designed by ABB Lummus Global Inc. for a minimum of 94 percent CO_2 capture from the boiler flue gas stream.

Table 5 shows the Dakota Gasification Project's CO_2 Product Specification achieved for EOR (Dakota, 2005), which was used as a guideline for the GPS design in this study. A distillation type of purification system was necessary to obtain the low O_2 requirement shown in the table.

Table 5: Dakota Gasification Project CO_2 Product Specification for EOR

Component	(units)	Value
CO_2	(vol %)	96
H_2S	(vol %)	1
CH_4	(vol %)	0.3
C_2 + HC's	(vol %)	2
CO	(vol %)	---
N_2	(ppm by vol.)	6000
H_2O	(ppm by vol.)	2
O_2	(ppm by vol.)	100
Mercaptans and other Sulfides	(vol %)	0.03

The CO_2 product is provided in a liquid state at the plant boundary at 138 barg (2,000 psig). Product purity specifications for the CO_2 depend on the individual oil field being flooded.

<u>Power Plant Modifications to Accommodate O_2 firing and CO_2 Capture:</u> This section provides a review of the equipment changes made to the existing air fired CFB power plant (Case-1) in order to accommodate retrofitting of the unit to oxygen firing for the purpose of CO_2 capture (Case-2). This retrofit represents a power plant consisting of the following major equipment groups:

1. An existing Circulating Fluidized Bed (CFB) boiler modified to accommodate oxygen-firing and CO_2 capture
2. A new cryogenic type ASU to provide O_2 to the CFB boiler for combustion of the fuel (Nominally ~1,640 tonne/day/ ~1,800 ton/day of O_2)

3. An existing subcritical steam cycle with reheat [~ 98 MWe-gross: 138 barg (2,000 psig) / 538°C (1,000°F) / 538°C (1,000°F) / 7.6 cm Hga (3.0 in. Hga)] modified to integrate low-level heat rejection from the new ASU with the existing steam cycle
4. A new Gas Processing System (GPS) designed to purify, compress, and liquefy the high CO_2 content flue gas produced by the CFB boiler to conditions acceptable for an EOR application. (Nominally ~1,760 tonne/day/ ~1,940 ton/day of CO_2)
5. Existing balance of plant equipment including coal, sorbent and ash handling, cooling water system, electrical systems, etc.

The changes required to the existing plant equipment to accommodate O_2 firing and CO_2 capture are briefly summarized in the following list:

- All potential **air leaks into the Boiler Island system should be sealed** to minimize air infiltration.
- The **Draft System** (fans, blowers, ductwork, dampers, etc.) must be modified such that the boiler can operate in the air-fired mode for start-up and in the new oxygen-fired mode with gas recirculation. The system also must be flexible enough to allow the on-line transition from air to oxygen firing. The major modifications to this system involve adding new gas recirculation ductwork/dampers and a new ID fan, which is required due to the additional draft loss of the new FDA system described below. All other existing fans and blowers can be used without modifications with O_2 firing.
- Additional **controls and instrumentation** will be required for the new components and systems. The transition between air firing and oxygen firing as well as additional safety precautions associated with oxygen use in this type of setting need careful consideration.
- A **significant difference in flue gas desulfurization equipment** is used for O_2 fired Case-2 as compared to the air fired existing unit (Case-1). In the existing unit, a traditional furnace limestone injection system is used to remove about 90 percent of the SO_2 produced. To eliminate potential problems with recarbonation, the O_2 fired Case-2 does not use limestone injection into the furnace for SO_2 capture, but rather uses a tail end **Flash Dryer Absorber** system with hydrated lime injection for SO_2 capture. The FDA system is a dry SO_2 removal process, which operates in a humid flue gas condition.
- A **low-level heat recovery system** is integrated with the existing steam cycle. The low-pressure condensate stream leaving the existing condensate pumps bypasses the existing extraction feedwater heaters #1 and #2 and recovers some of the low-level heat rejected from the three ASU main air compressor aftercoolers.

<u>Boiler Heat Transfer and Materials Evaluation.</u> Oxygen firing causes changes in the heat absorption distribution and increases heat transfer coefficients in the convective pass of this unit. This section briefly summarizes the impact of these changes and discusses the suitability of the existing pressure parts to operate under the O_2 fired conditions.

Boiler Heat Transfer Summary:
Figure 5 shows a general comparison of the boiler heat absorption distribution between the air firing of Case-1 and the oxygen firing of Case-2. The total heat absorption is exactly the same in both cases. The Combustor heat absorption for O_2 fired Case-2 is exactly the same as it was for air fired Case-1. The heat transfer coefficient for the Combustor was assumed to be the same for air and O_2 firing based upon the review and analysis of pilot plant test data.

The Convection Pass heat absorption for O_2 fired Case-2 is about 24 percent higher than it was for air fired Case-1 due to the higher mass flow (~20 percent higher), higher specific heat, and different gas

composition of the flue gas in the convective pass with O_2 firing. Significant increases to convective and non-luminous heat transfer rates (Btu/hr-ft^2-°F) in the convective pass are calculated for this application.

To compensate for the increased convective pass absorption, the External Heat Exchanger (EHE) heat absorption for O_2 fired Case-2 is reduced by about 21 percent by diverting less of the hot solids leaving the cyclones to the EHE's. The heat transfer coefficient for the EHE's was assumed to be the same for air and O_2 firing based upon the review and analysis of pilot plant test data. Since limestone is not added to the furnace in Case-2, the ash flow and the ash cooler heat duty are lower.

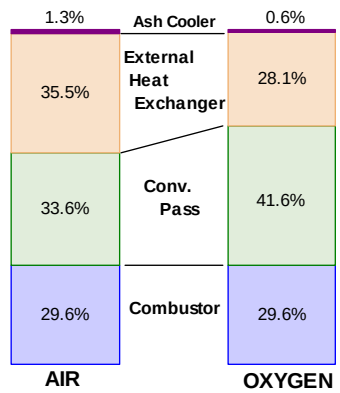

Figure 5: CFB Boiler Heat Absorption

Boiler Pressure Part Materials Evaluation:
With the increased heat transfer rates and heat absorption in the convective pass associated with oxygen firing and with similar steam temperature profiles, there was concern regarding the potential for high metal temperatures, especially within the convective pass heat exchangers of the unit. A preliminary analysis was done to check if any design limits were exceeded for the existing heat exchanger tubing. Analysis of the convective pass pressure part materials, using the calculated gas and steam conditions with oxygen firing, indicates that the pressure parts operate within ASME allowable temperature limits over an acceptable load range. A similar analysis was also done for the EHE tubing; again, no limits were exceeded. Therefore, no changes in pressure parts materials are necessary for the study unit.

Plant Performance And Economic Comparison: The results of the plant performance and economic analyses both with and without CO_2 removal are briefly discussed and compared below.

Net Plant Output, Efficiency and CO_2 Emissions: An overall plant performance comparison for the existing air fired and the retrofit O_2 fired CFB plants is shown in Table 6. The Case-1 and Case-2 plants produce net plant outputs of about 90.4 and 62.1 MWe, respectively. Steam cycle and boiler efficiencies are slightly lower with O_2 firing than with air firing. Plant thermal efficiencies (HHV basis) were 36.6 and 24.6 percent respectively, which represents an energy penalty of about 33 percent for Case-2. The large reductions in output and efficiency for Case-2 are primarily the result of large power consumption requirements for the cryogenic air separation unit and gas processing system as shown in Table 6.

Carbon dioxide emission for the "business as usual", air-fired CFB plant (Case-1) is 1.94 lb/kWh. The O_2 fired CFB (Case-2) reduced carbon dioxide emissions to about 0.17 lb/kWh (1.77 lb/kWh avoided CO_2 emissions with respect to Case-1). The CO_2 captured in Case-2 was about 94 percent.

Retrofit Investment Costs. The incremental investment cost to retrofit the existing unit for O_2 firing and CO_2 capture is 1,545 $/kW based on the plant output after retrofit (1,062 $/kW based on the original plant output). Table 7 shows the breakdown of costs to retrofit the existing boiler to O_2 firing and CO_2 capture. ABB Lummus Global Inc. and Praxair provided costs for the Gas Processing System and ASU, respectively. The costs for Boiler Modifications and the FDA System were provided by ALSTOM.

Table 6: Plant Performance Comparison – Air and O_2 Firing

		Case-1: Air Fired CFB (Base-Case) w/o CO_2 Capture		Case-2: CFB Retrofit with O_2 Firing and CO_2 Capture	
	(Units)	(English)	(SI)	(English)	(SI)
Auxiliary Power Summary					
Power Plant Auxiliary Power	(kW)	7331	7331	7313	7313
Air Separation Unit - ASU	(kW)	n/a	n/a	17081	17081
Gas Processing System - GPS (CO_2 purification, compression, liquefaction)	(kW)	n/a	n/a	12810	12810
Total Plant Auxiliary Power	(kW)	7331	7331	37204	37204
	(frac. of Gen. Output)	0.075	0.075	0.374	0.374
Steam Flows, Efficiencies and Electrical Outputs					
Main Steam Flow	(lbm/hr; kg/hr)	627000	284401	627000	284401
Reheat Steam Flow	(lbm/hr; kg/hr)	567418	257375	567418	257375
Boiler Efficiency (HHV)[1]	(fraction)	0.8946	0.8946	0.8875	0.8875
Steam Cycle Efficiency	(fraction)	0.4305	0.4305	0.4117	0.4117
Steam Turbine Generator Output	(kW)	97758	97758	99349	99349
Net Plant Output	(kW)	90427	90427	62144	62144
[1] Boiler Heat Output / (Qcoal-HHV + Qcredits)	(frac. of Case-1 Net Output)	1.00	1.00	0.69	0.69
Fuel Heat Inputs					
Coal Heat Input (HHV)	(10^6 Btu/hr; 10^6 KJ/hr)	843	890	852	899
Natural Gas Heat Input (HHV)[2]	(10^6 Btu/hr; 10^6 KJ/hr)	n/a	n/a	9.3	9.8
Total Fuel Heat Input (HHV)	(10^6 Btu/hr; 10^6 KJ/hr)	843	890	861	909
[2] Required for GPS & ASU Desiccant Regeneration in Case 2					
Overall Plant Efficiency					
Net Plant Heat Rate (HHV)	(Btu/kwhr; KJ/kwhr)	9328	9839	13861	14620
Net Plant Thermal Efficiency (HHV)	(fraction)	0.3659	0.3659	0.2462	0.2462
Energy Penalty	(fraction)	0.00	0.00	0.33	0.33
CO_2 Emissions					
CO_2 Produced	(lbm/hr; kg/hr)	175501	79605	172405	78201
CO_2 Captured	(lbm/hr; kg/hr)	0	0	161534	73270
Fraction of CO2 Captured	(fraction)	0.000	0.000	0.937	0.937
CO_2 Emitted	(lbm/hr; kg/hr)	175501	79605	10871	4931
Specific CO_2 Emissions	(lbm/kwhr; kg/kwhr)	1.94	0.88	0.17	0.08
Avoided CO_2 Emissions (as compared to Base Case)	(lbm/kwhr; kg/kwhr)	0.00	0.00	1.77	0.80

It should be emphasized that because of the small size of this unit (62.1 MWe-net after retrofit) some of the cost impacts listed above are strongly influenced by economy of scale effects. The retrofit costs shown above and the resulting economic impacts shown below are significantly greater than would be expected with larger CFB or PC power plants. The selection of a small CFB for this study was however done purposely in order to investigate a unit size that would be relatively close to the size that will be chosen for ALSTOM's large-scale O_2 fired technology demonstration.

Table 7: Case-2 Plant Retrofit Investment Cost Summary

Category	Retrofit Investment Costs		
	$	$/kW-new	$/kW-original
Boiler Modifications (Seal leaks, GR system, ID fan, Controls)	4,500,000	72	50
FDA System & Baghouse Modifications	5,850,000	94	65
Gas Processing System	48,174,000	775	533
Air Separation Unit	37,500,000	603	415
Total	**96,024,000**	**1,545**	**1,062**

Incremental Cost of Electricity and CO_2 Mitigation Costs. Using a Utility finance model and typical utility economic assumptions, the corresponding incremental levelized cost of electricity was about 3.1 Cents/kWh. This analysis assumed a credit for CO_2 product to be supplied to the EOR site of 15.00 $/ton. The mitigation cost for the CO_2 capture plants is defined as the additional cost of electricity ($/kWh) divided by the reduction in carbon dioxide emissions (ton/kWh). The Case-2 O_2-fired CFB has a mitigation cost of about 37 $/ton of CO_2 avoided.

SUMMARY

Combustion of fossil fuels with oxygen instead of air produces a CO_2-rich flue gas, which can be readily processed for sequestration or use. Circulating fluidized bed combustion is particularly well suited to

oxygen firing - the solids circulation through an external heat exchanger can reduce the requirement for flue gas recirculation in Greenfield applications.

Pilot scale tests have confirmed the operability and technical feasibility of an oxygen-fired CFB system and have also investigated tail end SO_2 removal with Flash Dryer Absorber technology, criteria and trace emissions, convective pass fouling and heat transfer.

Even today, without the requirement of CO_2 sequestration, the oxygen-fired CFB can be economically feasible where the CO_2 from the gas processing system and the N_2 from the ASU are sold as byproducts for enhanced oil recovery.

Current cryogenic air separation technology consumes a large portion of the power plant's output. In the future, more efficient O_2 production methods such as oxygen transport membrane technology can be integrated into the boiler island and improve the economics and thermal efficiency of combustion based oxygen-fired systems.

ALSTOM has now completed the major bench and pilot scale testing and techno-economic evaluations necessary to justify moving forward onto the next major step – a large scale O_2 fired CFB technology demonstration. After the technology demonstration step, commercial offerings can begin. In parallel to the demonstration step, ALSTOM is conducting under the DOE auspices an evaluation of a CO_2 capture ready supercritical CFB plant.

ACKNOWLEDGMENTS

The financial support and technical guidance provided by the U.S. DOE's National Energy Technology Laboratory are appreciated.

BIBLIOGRAPHY

Bozzuto, C., Nsakala, N., Liljedahl, G., Palkes, M., Marion, J., Vogel, D., Gupta, J.C., Fugate, M., Guha, M., “Engineering Feasibility of CO_2 Capture on an Existing Coal-Fired Power Plant,” Final Report for OCDO / DOE-NETL, Prepared by ALSTOM Power Inc., June 29, 2001.

Dakota Gasification Company, “Carbon Dioxide Specifications,” April 2005, http://www.dakotagas.com/specs/co2spec.pdf

Marion, J., Bozzuto, C., Nsakala, N., Liljedahl, G., “Evaluation Of Advanced Coal Combustion & Gasification Power Plants With Greenhouse Gas Emission Control,” Topical Phase-I DOE-NETL Report, Prepared by ALSTOM Power Inc., May 15, 2003.

Nsakala, N., Liljedahl, G., Turek, D., “Greenhouse Gas Emission Control by Oxygen Firing in Circulating Fluidized Bed Boilers: Phase II – Pilot Scale Testing and Updated Performance and Economics for Oxygen Fired CFB with CO_2 Capture,” Final DOE-NETL Report, Prepared by ALSTOM Power Inc., October 27, 2004.

Nsakala, N., Liljedahl, G., Turek, D., “Commercialization Development of Oxygen Fired CFB for Greenhouse Gas Control,” DOE-NETL Draft Topical Report, Prepared by ALSTOM Power Inc., Submitted to DOE, December 29, 2005.