COMMERCIALIZATION DEVELOPMENT OF OXYGEN FIRED CFB FOR GREENHOUSE GAS CONTROL

VOLUME I
PILOT SCALE TESTING AND DESIGN STUDY OF AN EXISTING CFB RETROFIT TO OXYGEN FIRING AND CO_2 CAPTURE

VOLUME II
DESIGN STUDY OF A CAPTURE READY CFB STEAM PLANT RETROFIT TO OXYGEN FIRING AND CO_2 CAPTURE

FINAL REPORT

SUBMITTED BY

ALSTOM POWER INC.
POWER PLANT LABORATORIES
2000 DAY HILL ROAD
WINDSOR, CT 06095
(860) 688-1911

Principal Authors:
Nsakala ya Nsakala
Gregory N. Liljedahl
David G. Turek

PREPARED FOR

NETL AAD DOCUMENT CONTROL BLDG. 921
US DEPARTMENT OF ENERGY
NATIONAL ENERGY TECHNOLOGY LABORATORY
P.O. BOX 10940
PITTSBURGH, PENNSYLVANIA 15236-0940
(COOPERATIVE AGREEMENT NO. DE-FC26-04NT42205)

FINAL REPORT SUBMITTAL DATE: AUGUST 24, 2007
PERFORMANCE PERIOD: OCTOBER 1, 2004 – JUNE 30, 2007

PPL REPORT NO. PPL-07-CT-20

COMMERCIALIZATION DEVELOPMENT OF OXYGEN FIRED CFB FOR GREENHOUSE GAS CONTROL

VOLUME I

PILOT SCALE TESTING AND DESIGN STUDY OF AN EXISTING CFB RETROFIT TO OXYGEN FIRING AND CO_2 CAPTURE

FINAL REPORT

SUBMITTED BY

ALSTOM POWER INC.
POWER PLANT LABORATORIES
2000 DAY HILL ROAD
WINDSOR, CT 06095
(860) 688-1911

Principal Authors:
Nsakala ya Nsakala
Gregory N. Liljedahl
David G. Turek

PREPARED FOR

NETL AAD DOCUMENT CONTROL BLDG. 921
US DEPARTMENT OF ENERGY
NATIONAL ENERGY TECHNOLOGY LABORATORY
P.O. BOX 10940
PITTSBURGH, PENNSYLVANIA 15236-0940
(COOPERATIVE AGREEMENT NO. DE-FC26-04NT42205)

FINAL REPORT SUBMITTAL DATE: AUGUST 24, 2007
PERFORMANCE PERIOD:
OCTOBER 1, 2004 – JUNE 30, 2007

PPL REPORT NO. PPL-07-CT-20

DISCLAIMER

This report was prepared as an account of work sponsored by an agency of the United Sates Government. Neither the United States Government nor any agency thereof, nor any of their employees makes any warranty, express or implied, or assumes any legal liability or responsibility for the accuracy, completeness, or usefulness of any information, apparatus, product, or process disclosed, or represents that its use would not infringe privately owned rights. Reference herein to any specific commercial product, process, or service by trade name, trademark, manufacturer, or otherwise does not necessarily constitute or imply its endorsement, recommendation, or favoring by the United States Government or any agency thereof. The views and opinions of authors expressed herein do not necessarily state or reflect those of the United States Government or any agency thereof.

ACKNOWLEDGMENTS

The authors gratefully acknowledge the following people for their contributions to the successful performance of the work presented herein:

Larry Cellilli, Ray Chamberland, Gene Dallaire, Bill Gurski, Kurt Johnson, Glen Jukkola, Armand Levasseur, Ray MacWhinnie, Dana Raymond, Paul Panos, and Peter Stromberg of ALSTOM Power Inc., and Pedro Jaldin, Dave Vogel, and Paul Milios of ABB Lummus Global Inc. for their contributions.

The financial support of this project by DOE National Energy Technology Laboratory (Contract No DE-FC26-04NT42205) and ALSTOM Power Inc. is also acknowledged.

PUBLIC ABSTRACT

Given that fossil fuel fired power plants are among the largest and most concentrated producers of CO_2 emissions, recovery and sequestration of CO_2 from the flue gas of such plants has been identified as one of the primary means for reducing anthropogenic (i.e., man-made) CO_2 emissions.

In 2001, ALSTOM Power Inc. (ALSTOM) began a two-phase program to investigate the feasibility of various carbon capture technologies. This program was sponsored under a Cooperative Agreement from the US Department of Energy's National Energy Technology Laboratory (DOE).

The first phase entailed a comprehensive study evaluating the technical feasibility and economics of alternate CO_2 capture technologies applied to Greenfield US coal-fired electric generation power plants. Thirteen cases, representing various levels of technology development, were evaluated. Seven cases represented coal combustion in CFB type equipment. Four cases represented Integrated Gasification Combined Cycle (IGCC) systems. Two cases represented advanced Chemical Looping Combined Cycle systems. Marion, et al. reported the details of this work in 2003.

One of the thirteen cases studied utilized an oxygen-fired circulating fluidized bed (CFB) boiler. In this concept, the fuel is fired with a mixture of oxygen and recirculated flue gas (mainly CO_2) - see schematic below. This combustion process yields a flue gas containing over 80 percent (by volume) CO_2. This flue gas can be processed relatively easily to enrich the CO_2 content to over 96 percent for use in enhanced oil or gas recovery (EOR or EGR) or simply dried for sequestration.

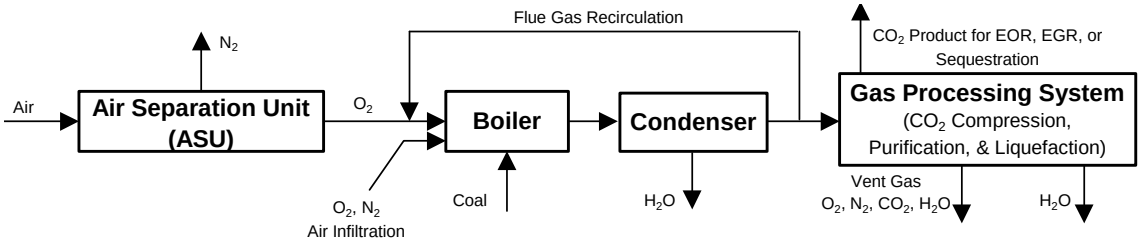

The Phase I study identified the O_2-fired CFB as having a near term development potential, because it uses conventional commercial CFB technology and commercially available CO_2 capture enabling technologies such as cryogenic air separation and simple rectification or distillation gas processing systems. In the long term, air separation technology advancements offer significant reductions in power requirements, which would improve plant efficiency and economics for the oxygen-fired technology.

The second phase consisted of pilot-scale testing followed by a refined performance and economic evaluation of the O_2 fired CFB concept. As a part of this workscope, ALSTOM modified its 3 MW_{th} (9.9 MMBtu/hr) Multiuse Test Facility (MTF) pilot plant to operate with O_2/CO_2 mixtures of up to 70 percent O_2 by volume. Tests were conducted with coal and petroleum coke. The test objectives were to determine the impacts of oxygen firing on heat transfer, bed dynamics, potential agglomeration, and gaseous and particulate emissions. The test data results were used to refine the design, performance, costs, and economic models developed in Phase-I for the O_2-fired CFB with

CO_2 capture. Nsakala, Liljedahl, and Turek reported results from this study in 2004.

ALSTOM identified several items needing further investigation in preparation for large scale demonstration of the oxygen-fired CFB concept, namely:

- Operation and performance of the moving bed heat exchanger (MBHE) to avoid recarbonation and also for cost savings compared to the standard bubbling fluid bed heat exchanger (FBHE).
- Performance of the back-end flash dryer absorber (FDA) for sulfur capture under high CO_2 / high moisture flue gas environment using calcined limestone in the fly ash and using fresh commercial lime directly in the FDA.
- Determination of the effect of recarbonation on fouling in the convective pass.
- Assessment of the impact of oxygen firing on the mercury, other trace elements, and volatile organic compound (VOC) emissions.
- Develop a proposal-level oxygen-fired retrofit design for a relatively small existing CFB steam power plant in preparation for a large-scale demonstration of the O_2 fired CFB concept.

Hence, ALSTOM responded to a DOE Solicitation to address all these issues with further O_2 fired MTF pilot testing and a subsequent retrofit design study of oxygen firing and CO_2 capture on an existing air-fired CFB plant. ALSTOM received a contract award from the DOE to conduct a project entitled "Commercialization Development of Oxygen Fired CFB for Greenhouse Gas Control," under Cooperative Agreement DE-FC26-04NT42205 that is the subject of this topical report.

Results from this study show the following:

Pilot Scale Testing Results:

The main results from the 2005 pilot scale testing are summarized here.

- There were no operational problems due to recarbonation or any other issues due to the oxygen firing over the range of CFB conditions tested.
- The sulfur capture with lime only to the back-end baghouse/FDA system was slightly lower with oxygen firing compared to air firing. The sulfur capture in the furnace with limestone addition was higher with oxygen firing than with air firing.
- The N_2O and VOC emissions were low under all circumstances.
- The emissions of mercury, VOC, and other trace metals when oxy-firing were at least as low as with air firing.
- The MBHE performed as expected in terms of heat transfer. The performance did not deteriorate or change due to changes in firing conditions of the test campaign: load, fuel, limestone, or air vs. O_2.

Retrofit Study Results:

The retrofit of an existing CFB boiler steam plant to oxygen firing and CO_2 capture causes several significant impacts on the overall plant performance, CO_2 emissions, and cost of electricity as compared to the air fired Base Case. The net plant output is reduced

from 90 to 62 MWe, a 31 percent reduction. The plant thermal efficiency (HHV basis) is reduced by about 12.0 percentage points (from 36.6% to 24.6%). Specific CO_2 emissions are reduced more than 91 percent from 0.88 to 0.08 kg/kWh (1.94 to 0.17 lbm/kWh).

Retrofitting the existing CFB boiler to oxygen firing capability is technically straightforward, with the CFB boiler requiring relatively minimal modifications. Boiler modifications include a new flue gas recirculation system, new oxygen supply piping, new CO_2 product ductwork to the new gas processing system, the addition of a new SO_2 removal system (Flash Dryer Absorber), and associated new controls and instrumentation for these systems. Pressure part changes to the existing boiler are not required.

The major new systems required for the boiler retrofit are a cryogenic air separation unit (ASU) and a gas processing system (GPS). The ASU and GPS have significant land area requirements for the location of new equipment. The new cryogenic air separation unit requires about 3,600 m^2 (0.9 acres) and the new gas processing system requires about 6,500 m^2 (1.6 acres). By comparison, the area required for the existing 90 MWe Boiler Island (including the CFB boiler, fans and blowers, air and flue gas ductwork, fuel and limestone silos, and baghouse) is about 3,600 m^2 (0.9 acres). Location of this new equipment on the selected study unit site was not difficult but on some existing sites this can be complicated and may require long duct and piping runs between the new and existing equipment.

The plant retrofit is extimated to cost about 1,545 $/kW, based on the new power output (1,060 $/kW on the basis of original plant output). Modifications to the existing boiler cost 72 $/kW(new). The new Flash Dryer Absorber SO_2 removal system costs 94 $/kW(new). The remaining costs - nearly 90% of the total - are for the cryogenic air separation and gas processing systems. Though costly, these systems are commercially proven and technically straightforward.

Cost of electricity is calculated to increase by about 3.1 cents/kWh as compared to the study unit before retrofit and the associated CO_2 mitigation cost is projected to be about 39 $/tonne (35 $/ton) of CO_2 avoided. These economic results used a credit value of 16.5 $/tonne of CO_2 (15.0 $/ton) for this assumed EOR application.

It should be emphasized that because of the small size of this unit (62 MWe after retrofit), some of the impacts listed above are strongly influenced by “economy of scale” effects. The retrofit costs required and the resulting economic impacts are significantly greater than would be expected with state of the art sized CFB- or PC-based power plants. Additionally, the relatively low steam conditions for this existing unit contribute to the large impact on efficiency and a smaller impact on the economics.

The technology development has proceeded to where it is now ready for large-scale demonstration. To prepare for demonstration of the O_2 fired CFB concept, ALSTOM is now actively seeking partners for this important next step. Following a successful large-scale demonstration of the technology, commercial offerings would be possible. Based on these results, it is recommended that this technology be demonstrated.

ALSTOM also identified a need to investigate the design of the CO_2 capture ready oxygen-fired CFB power plant concept, which is the subject of Volume-II of this report.

TABLE OF CONTENTS

DISCLAIMER ii
ACKNOWLEDGMENTS iii
PUBLIC ABSTRACT iv
EXECUTIVE SUMMARY 1
1 INTRODUCTION 5
2 OXYGEN-FIRING TECHNOLOGY READINESS 8
2.1 O_2 Fired CFB Technology Development by ALSTOM 8
2.1.1 ALSTOM's Development Roadmap 8
2.1.2 Brief Project Descriptions 11
2.1.3 Summary of Results 14
2.2 O_2 Fired Pulverized Fuel Technology Development 21
2.2.1 Techno-Economic Analysis 21
2.2.2 Combustion Testing in Pilot-Scale and Demonstration Plant 23
2.2.3 Vattenfall Demonstration Project 27
2.3 Concluding Remarks 28
3 PILOT SCALE TEST RESULTS AND DATA ANALYSIS 29
3.1 Background and Objectives 29
3.1.1 MTF Pilot Tests Conducted in Year 2004 29
3.1.2 Objectives of the 2005 MTF Pilot Tests 30
3.1.3 Backend Sulfur Capture 30
3.1.4 MBHE Demonstration 32
3.1.5 NO_x Emissions 33
3.1.6 Mercury and Trace Elements Analysis 33
3.1.7 Convective Pass Fouling and Heat Transfer 33
3.2 MTF Pilot Plant 34
3.2.1 General Facility Description 34
3.2.2 Facility Modification for Oxygen Firing 39
3.2.3 Differences Between 2004 and 2005 Pilot Plant Modifications 42
3.2.4 Differences Between Pilot Plant and Commercial Unit 43
3.3 Fuels and Limestones 45
3.3.1 Fuels 45
3.3.2 Sorbents 48
3.3.3 Sand 51
3.4 Test Description and Conditions 51
3.4.1 Test Matrix and Objectives 51
3.5 Test Results and Analysis 56
3.5.1 Operability 56
3.5.2 Approaches to Steady State 56
3.5.3 Furnace Temperature and Pressure Profiles 57
3.5.4 Solids Samples 62
3.5.5 Gaseous Emissions 66
3.5.6 Sulfur Emissions and Backend Capture 70
3.5.7 Recarbonation 75
3.5.8 NO_x Emissions 76

3.5.9 CO Emissions 79
3.5.10 N_2O Emissions 80
3.5.11 VOC Emissions 81
3.5.12 Combustion Efficiencies/Unburned Carbon (UBC) Emissions 82
3.5.13 Mercury and Other Trace Metals 85
3.5.14 Convective Pass Heat Transfer and Fouling 89
3.5.15 Moving Bed Heat Exchanger 90
3.6 Summary of Pilot Scale Test Results 98
4 TECHNO-ECONOMIC EVALUATIONS 99
4.1 Study Unit Selection and Description 100
4.1.1 Study Unit Selection Criteria 100
4.1.2 Study Unit Description 101
4.2 Plant Performance Basis, Equipment Design Basis, and Project Scope 105
4.2.1 Common Parameters for Case Studies 105
4.2.2 Additional Design Bases Used for Case-2 108
4.2.3 Project Scope 110
4.3 Case-1: Existing CFB Power Plant, Air Fired without CO_2 Capture (Base Case) 111
4.3.1 Case-1: Development of CFB Boiler Computer Model 111
4.3.2 Case-1: Boiler Island Process Description, Performance, and Equipment 112
4.3.3 Case-1: Boiler Performance Summary 115
4.3.4 Case-1: Steam Cycle Performance Summary 115
4.3.5 Case-1: Overall Plant Performance and CO_2 Emissions Summary 116
4.4 Case-2: Existing CFB Power Plant Retrofit with Oxygen Firing and CO_2 Capture 118
4.4.1 Case-2: Existing Power Plant Modifications 118
4.4.2 Case-2: Oxygen Fired CFB Boiler Computer Model 130
4.4.3 Case-2: Boiler Island Process Description, Performance, and Equipment 131
4.4.4 Case-2: Gas Processing System (GPS): Process Description, Performance, and Equipment 143
4.4.5 Case-2: Air Separation Unit (ASU): Process Description, Performance, and Equipment 157
4.4.6 Case-2: Balance of Plant Equipment and Performance 162
4.4.7 Case-2: Overall Plant Performance and CO_2 Emissions Summary 165
4.5 Retrofit Cost Analysis 171
4.5.1 Cost Estimation Basis: 171
4.5.2 Plant Investment Cost and Operating and Maintenance Cost Summary: 175
4.5.3 Case-1: Plant Costs 176
4.5.4 Case-2: Plant Costs 178
4.5.5 Economy of Scale Effects 184
4.6 Economic Analysis 186
4.6.1 Economic Analysis Assumptions: 186
4.6.2 Economic Analysis Results Summary 188
4.6.3 Economic Analysis Sensitivity Study Results: 189
5 SUMMARY AND RECOMMENDATIONS 193
6 BIBLIOGRAPHY 196

7 APPENDICES.....199
7.1 Appendix I: Plant Drawings 200
7.2 Appendix II: Plant Equipment Lists 211
7.2.1 Case-2: Modified CFB Boiler Equipment..... 212
7.2.2 Case-2: New Gas Processing System Equipment 214
7.2.3 Case-2: New Air Separation Unit Equipment 215

LIST OF FIGURES

Figure 2.1: Oxygen-Fired CFB Technology Development Horizon 9
Figure 2.2: Schematic of Vattenfall's Oxyfuel Demonstration Pilot Plant 28
Figure 3.1: Equilibrium Temperature for Calcination 31
Figure 3.2: Boiler Heat Absorption Comparison – Air and 70% O_2 Firing 33
Figure 3.3: Schematic of the Multi-use Test Facility (MFT) 34
Figure 3.4: MTF Process & Instrumentation Diagram 37
Figure 3.5: O_2 and CO_2 Supply Tanks 40
Figure 3.6: Schematic of Oxygen and Carbon Dioxide Flows to the MTF 41
Figure 3.7: Modified Fluidized Bed Heat Exchanger Showing Air Vent 42
Figure 3.8: Fluidizing Velocity *vs*. O_2 Enrichment 43
Figure 3.9: Water-Cooled Gridplate 43
Figure 3.10: Fuel Size Distribution 46
Figure 3.11: Limestone and Sand Screen Size Distribution 50
Figure 3.12: Lime CILAS Size Distribution 50
Figure 3.13: Limestone TGA Results 51
Figure 3.14: MTF Test Matrix 52
Figure 3.15: MTF Test Summary Figure 54
Figure 3.16: Calcium-to-Inert Ratio of Ash Samples 57
Figure 3.17: Key for Temperature and Pressure Locations 58
Figure 3.18: Summary of Temperature Profiles 60
Figure 3.19: Summary of Furnace Pressure Drop 60
Figure 3.20: Calculated Velocities and Gas Flow Rates 61
Figure 3.21: Flue Gas Composition at Furnace and Baghouse Outlets 68
Figure 3.22: SO_2 Emissions in ppmv 70
Figure 3.23: SO_2 Emissions in lb/MMBtu 71
Figure 3.24: Summary of SO_2 Emissions 72
Figure 3.25: Percent Sulfur Capture Data 74
Figure 3.26: Calcium Utilization of Ash Samples 75
Figure 3.27: Recarbonation of Solids Samples 76
Figure 3.28: NO_x Emissions vs. Mid Furnace Temperature 77
Figure 3.29: SNCR test with Bituminous and Oxygen Firing 78
Figure 3.30: SNCR Test with Pet Coke and Oxygen Firing 78
Figure 3.31: CO Emissions vs. Upper Furnace Temperature 80
Figure 3.32: N_2O Emissions vs. Upper Furnace Temperature 81
Figure 3.33: VOC vs. Mid Furnace Temperature 82
Figure 3.34: Carbon Heat Loss 85
Figure 3.35: Tracking of Five Metals 86
Figure 3.36: Calculated Metals Concentration on Dust 87
Figure 3.37: Heat Duty of Convective Probe Bank 1 89
Figure 3.38: Heat Duty of Convective Probe Bank 2 90
Figure 3.39: Moving Bed Heat Exchanger Sectional Views 95
Figure 3.40: Moving Bed Heat Exchanger 96
Figure 3.41: Moving Bed Heat Exchanger Average Solids Temperatures 96
Figure 3.42: Moving Bed Heat Exchanger Solids and Heat Flows 97

Figure 4.1: Study Unit (Existing CFB Steam Generator) Sectional Side Elevation Drawing 104
Figure 4.2: Case-1 (Base Case) Simplified Boiler Island Gas Side Process Flow Diagram 112
Figure 4.3: Case-1 Simplified Steam Cycle Diagram and Performance 116
Figure 4.4: Case-1 Steam Cycle State Points Shown on T-S and H-S Coordinates 116
Figure 4.5: Simplified O_2 Fired Concept Diagram 118
Figure 4.6: New Gas Recirculation and Oxygen Supply Ductwork Sketch 121
Figure 4.7: Case-2 New Ductwork Arrangement Drawing 122
Figure 4.8: Case-2 New Duct and Damper P&ID Schematic 126
Figure 4.9: Flash Dryer Absorber (FDA) System Schematic Diagram (simplified) 128
Figure 4.10: Case-2 New Flash Dryer Absorber (FDA) System General Arrangement Sketch 129
Figure 4.11: Case-2 Low Level Heat Recovery System Schematic 130
Figure 4.12: Calcination Temperature of Calcium Carbonate 133
Figure 4.13: Case-2 Simplified Boiler Island Gas Side Process Flow Diagram 136
Figure 4.14: CFB Boiler Heat Absorption Comparison (Air and O_2 Firing) 140
Figure 4.15: Convective Heat Transfer Rate Comparison 141
Figure 4.16: Non-Luminous Radiant Heat Transfer Rate Comparison 141
Figure 4.17: Total Heat Transfer Rate Comparison 142
Figure 4.18: Case-2 Process Flow Diagram for Flue Gas Quenching 149
Figure 4.19: Case-2 Process Flow Diagram for Flue Gas Compression 150
Figure 4.20: Case-2 Process Flow Diagram for Distillation 151
Figure 4.21: Case-2 Process Flow Diagram for Propane Refrigeration 152
Figure 4.22: Case-2 Air Separation Unit Process Flow Diagram 159
Figure 4.23: Case-2 Steam Cycle Schematic and Performance 163
Figure 4.24: Case-2 Steam Cycle State Points Shown on T-S and H-S Coordinates 163
Figure 4.25: Boiler Efficiency Comparison 167
Figure 4.26: Steam Cycle Efficiency Comparison 168
Figure 4.27: Auxiliary Power Comparison between Air-Fired and Oxygen Fired CFB Plants 168
Figure 4.28: Net Plant Output Comparison 169
Figure 4.29: Net Plant Thermal Efficiency Comparison 170
Figure 4.30: Plant CO_2 Emissions per kWh 171
Figure 4.31: Gas Processing System Specific Cost Comparison 185
Figure 4.32: Incremental Cost of Electricity for Case-2 189
Figure 4.33: Economic Sensitivity Analysis Results for Case 2 190
Figure 7.1: Case 1 - Existing Site Plot Plan Drawing Identifying Selected Major Equipment Locations 201
Figure 7.2: Case-1 - General Arrangement Boiler Side Elevation Drawing (existing CFB boiler) 202
Figure 7.3: Case-1 - General Arrangement Boiler Plot Plan Drawing (existing CFB boiler) 203
Figure 7.4: Side Elevation Drawing of Existing Baghouse and ID Fan 204
Figure 7.5: Plan View of Existing Baghouse and ID Fan 205

Figure 7.6: Case-2 - General Arrangement of New Ductwork for Gas Recirculation and Oxygen Supply 206
Figure 7.7: Case-2 – Section Views of New Ductwork for Gas Recirculation and Oxygen Supply 207
Figure 7.8: Case-2 - New Gas Cooler and Gas Processing System Layout Drawing 208
Figure 7.9: Case 2 – New Air Separation Unit Layout Drawing 209
Figure 7.10: Case 2 – Modified Site Plot Plan Drawing Showing Locations of Existing Boiler and Major New Equipment 210

LIST OF TABLES

Table 2.1: Performance Analyses for Various Power Plant Concepts..... 16
Table 2.2: Cost Analyses for Various Power Plant Concepts..... 17
Table 2.3: Cost of Electricity and Avoided Cost for Various Power Plant Concepts 18
Table 2.4: Summary of Bench-Scale FBC Testing..... 19
Table 2.5: Summary of Previous Pilot-Scale Test Results 20
Table 2.6: Techno-Economic Analysis Results of Oxy Combustion of Coal for CO_2 Capture (from Dillon, et al., 2005)..... 22
Table 2.7: Summary of Techno-Economic Studies of Coal Power Plant (From Tan, et al, 2005) 23
Table 2.8: List of Pilot-Scale Studies (from Tan, et al., 2005; Wall, et al., 2004) 24
Table 2.9: Demonstration Plant Studies (from Tan, et al., 2005; Wall, et al., 2004) 25
Table 2.10: Summary of NO_x Emissions Results (From Tan, et al., 2005)..... 26
Table 2.11: Summary of SO_2 Emissions Results (From Tan, et al., 2005) 27
Table 3.1: Typical Flue Gas Composition - Air *vs.* Oxygen Fired..... 32
Table 3.2: Flue Gas Recirculation *vs.* Pure CO_2..... 45
Table 3.3: Analysis and Size Distribution of Fuel Samples 47
Table 3.4: Fuel Ash and Metals Analyses 48
Table 3.5: PSD and Chemical Analysis of Lime and Limestones..... 49
Table 3.6: Selected Test Points..... 53
Table 3.7: Summary of Temperature and Pressure Profiles 59
Table 3.8: List of Solids Samples Taken 63
Table 3.9: Analyses of Fly Ash Solids Samples..... 64
Table 3.10: Analyses of Bed Solids Samples 65
Table 3.11: Key for Solids Analyses 65
Table 3.12: Gaseous Emissions 67
Table 3.13: Carbon Heat Loss in the Fly Ash..... 84
Table 3.14: Metals Data..... 88
Table 3.15: Moving Bed Heat Exchanger (MBHE) Test Data Summary 94
Table 4.1: Design Coal Analysis (Medium Volatile Bituminous)..... 105
Table 4.2: Design Limestone Analysis 106
Table 4.3: Site Characteristics 106
Table 4.4: Dakota Gasification Project's CO_2 Product Specification for EOR..... 108
Table 4.5: Case-1 (Base Case) Boiler Island Gas Side Material and Energy Balance ... 114
Table 4.6: Case-1 (Base Case) Boiler/Turbine Steam Flows and Conditions 115
Table 4.7: Case-1 Overall Plant Performance Summary (Base Case)..... 117
Table 4.8: Case-2 Ductwork Design Requirements..... 120
Table 4.9: Air and Oxygen Fired Flue Gas Comparison 130
Table 4.10: Issues for Sulfur Capture in Oxygen Fired CFB 134
Table 4.11: Case-2: Boiler Island Gas Side Material and Energy Balance 138
Table 4.12: Case-2 (Base Case) Boiler/Turbine Steam Flows and Conditions 139
Table 4.13: Dakota Gasification Project's CO_2 Specification for EOR and the Calculated Product Stream Purity 144
Table 4.14: Gas Processing System Material & Energy Balance..... 154

Table 4.15: Case-2 Gas Processing System Cooling Water and Fuel Gas Requirements 156
Table 4.16: Case-2 Gas Processing System Electrical Requirements 156
Table 4.17: Ambient Conditions Used for ASU Design..... 157
Table 4.18: ASU Oxygen Production and Purity..... 158
Table 4.19: ASU Electrical Usage 161
Table 4.20: ASU Natural Gas Usage 161
Table 4.21: ASU Operating Manpower 162
Table 4.22: Plant Performance and CO_2 Emissions Summary and Comparison..... 166
Table 4.23: Plant Investment Costs (EPC basis) and O&M Costs Summary..... 175
Table 4.24: Case-1: Total Plant Operating and Maintenance Costs 177
Table 4.25: Case-2 Plant Retrofit Investment Cost Summary..... 178
Table 4.26: Case-2: Total Plant Operating and Maintenance Cost Summary 179
Table 4.27: Case-2: Modified Boiler & BOP Annual Operating and Maintenance Costs 181
Table 4.28: Case-2 Gas Processing System Investment Costs 182
Table 4.29: Case-2 Gas Processing System Annual Operating and Maintenance Costs 183
Table 4.30: Case-2 ASU Annual Operating Costs..... 184
Table 4.31: Comparison of Gas Processing System Costs 185
Table 4.32: Economic Evaluation Study Assumptions..... 187
Table 4.33: Economic Sensitivity Study Parameters and Parameter Values..... 189
Table 4.34: Economic Sensitivity Analysis Results for Case 2 - Oxygen-Fired CFB with ASU and CO_2 Capture 191

LIST OF ACRONYMS AND ABBREVIATIONS

ABMA	American Boiler Manufacturers Association
ACFM	Actual cubic feet per minute
ACMM	Actual cubic meters per minute
ANSI	American National Standards Institute
ASFH	Air Suction Filter House
ASME	American Society of Mechanical Engineers
ASU	Air Separation Unit
Bara	Bar, absolute
Barg	Bar, gauge
BI	Boiler Island
BFP	Boiler Feedwater Pump
BOP	Balance of Plant
BSR	Beaven Sulfur Removal
Btu	British Thermal Unit
CFB	Circulating Fluidized Bed
CFM	Cubic Feet per Minute
CHL	Carbon Heat Loss
CMM	Cubic Meters per Minute
CO_2	Carbon Dioxide
COE	Cost of Electricity
CP	Condensate Pump
CS	Carbon Steel
dB	Decibel
DCA	Direct Contact Aftercooler
DCS	Distributed Control System
DGC	Dakota Gasification Company
DOE/NETL	Department of Energy/National Energy Technology Laboratory
ECBM	Enhanced Coal Bed Methane
EGR	Enhanced Gas Recovery
EHE	External Heat Exchanger
EOR	Enhanced Oil Recovery
EPC	Engineered, Procured and Constructed (cost basis)
FBC	Fluidized Bed Combustion
FBHE	Fluidized Bed Heat Exchanger
FD	Forced Draft
FDA	Flash Drier Absorber
FGD	Flue Gas Desulfurization
FGR	Flue Gas Recirculation
FF	Fabric Filter
FOM	Fixed Operation & Maintenance
gpm	Gallons per minute
GPS	Gas Processing System
GWe	Gigawatt electric
HHV	Higher Heating Value
HP	High Pressure
hp	Horse Power
hr	Hour
ID	Induced Draft
IP	Intermediate Pressure
in. H_2O	Inches of Water
in. Hga	Inches of Mercury, Absolute
kg	Kilogram
kJ	Kilojoule
kV	Kilovolt
kWe	Kilowatts electric
kWh	Kilowatt-hour
lbm	Pound mass
LHV	Lower Heating Value
LLHR	Low Level Heat Recovery
LMTD	Log Mean Temperature Difference
LP	Low Pressure
lpm	Liters per minute
MAC	Main Air Compressor
MBHE	Moving Bed Heat Exchanger
MCR	Maximum Continuous Rating
MDEA	Methyl Diethanolamine
MEA	Monoethanolamine
mm H_2O	Millimeters of Water
mm Hga	Millimeters of Mercury, Absolute
MTF	Multi-use Test Facility
MTP	Metal Temperature Program
MTPD	Metric Tonne Per Day
MTPH	Metric Tonne Per Hour
MWe	Megawatt Electric
MW_{th}	Megawatt Thermal
N_2	Nitrogen Gas
NPHR	Net Plant Heat Rate
O_2	Oxygen Gas
O&M	Operation & Maintenance
OTM	Oxygen Transport Membrane
P&ID	Process & Instrumentation Diagram
PA	Primary Air
PC	Pulverized Coal
PFD	Process Flow Diagram
PFWH	Parallel Feedwater Heater
PHX	Primary Heat Exchanger
ppm	Parts per million
ppmv	Parts per million (by volume)
ppmw	Parts per million (by weight)
psia	Pound per square inch, absolute
psig	Pound per square inch, gauge
RHBP	Reheat Boiler Program
SA	Secondary Air
SNCR	Selective Non Catalytic Reduction
TGA	Thermo-Gravimetric Analysis
TPD	Ton Per Day
TPH	Ton Per Hour
TSA	Temperature Swing Adsorption
UBC	Unburned Carbon
UCT	Upper Column Turbine
V	Volt
VOC	Volatile Organic Compounds
VOM	Variable Operation & Maintenance

EXECUTIVE SUMMARY

Background

Because fossil fuel fired power plants are among the largest and most concentrated producers of CO_2 emissions, recovery and sequestration of CO_2 from the flue gas of such plants has been identified as one of the primary means for reducing anthropogenic CO_2 emissions. In this study, ALSTOM Power Inc. (ALSTOM) has investigated one promising near-term coal fired power plant configuration designed to capture CO_2 from effluent gas streams for sequestration.

Burning fossil fuels in mixtures of oxygen and recirculated flue gas (principally CO_2) - see schematic below - essentially eliminates the atmospheric nitrogen in the flue gas. The resulting flue gas comprises primarily CO_2, along with some moisture, nitrogen, oxygen, and trace gases like SO_2 and NOx. Thus, this flue gas can be processed relatively easily to enrich the CO_2 content to 96-99$^+$ percent for use in enhanced oil or gas recovery (EOR or EGR) or simply dried for sequestration.

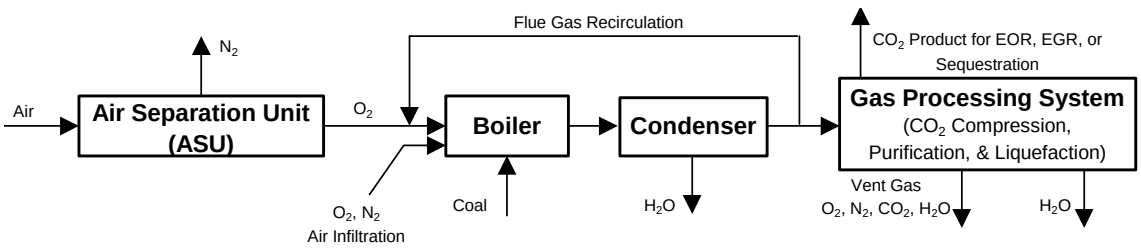

Oxygen firing in utility scale Pulverized Coal (PC) fired boilers has been shown to be a more economical method for CO_2 capture than scrubbing with Kerr-McGee-Lummus Crest monoethanolamine (MEA), which is a currently available technology (Bozzuto, et al., 2001). Additionally, oxygen firing in new Circulating Fluid Bed Boilers (CFB's) can be more economical than in PC or Stoker firing, because recirculated gas flow can be reduced significantly. Oxygen-fired PC and Stoker units require large quantities of recirculated flue gas to maintain acceptable furnace temperatures. New oxygen-fired CFB units, on the other hand, can accomplish this by additional cooling of recirculated solids. The reduced recirculated gas flow with new CFB plants results in significant Boiler Island cost savings resulting from reduced component sizes (Marion, et al., 2003).

Project Objective

The objective of this work is to help prepare the oxygen fired CFB technology for large-scale demonstration, especially for an enhanced oil or gas recovery (EOR or EGR) application. This was accomplished through the performance of two major milestones in this project:

1. Pilot Scale Testing

A pilot plant test of the oxygen-fired CFB concept was carried out in ALSTOM's 3.0 MWth (9.9 MMBtu/hr) Multi-use Test Facility (MTF). The specifically targeted objectives of this testing include:

- Demonstration of SO_2 polishing, specifically ALSTOM's Flash Dryer Absorber (FDA) process for reducing SO_2 emissions from the flue gas, which is concentrated to

high CO_2, H_2O, and SO_2 levels due to oxygen firing (i.e., no nitrogen dilution)

- Assessment of volatile organic compounds (VOC's), mercury, and other trace elements emission potentials
- Determination of back-pass convective section heat transfer performance
- Demonstration of the suitability and performance of a moving bed heat exchanger (MBHE) in place of a fluidized bed heat exchanger (FBHE).

2. Commercial Design Implications

A conceptual retrofit design study to convert an existing 90-MWe (nominal) air fired CFB plant to oxygen firing for CO_2 capture for an EOR application was carried out. This study was developed on the basis of ALSTOM's commercial CFB boiler design and performance standards as well as the technical information obtained from previous and current O_2 fired MTF test campaigns. Results from the testing were used in this design study. The design study scope included development of the retrofit design, calculation of overall plant performance and CO_2 emissions (Base Case and Retrofit Case), estimation of incremental retrofit costs, and economic analysis. This work sets the stage for developing a first of a kind large-scale demonstration of an oxygen fired CFB project in North America.

Project Results Summary

The MTF operated successfully with O_2 firing with both coal and petroleum coke, consistent with the two test campaigns conducted in 2004 (Nsakala, Liljedahl, and Turek, 2004). No technical barriers to continued development of the O_2 fired technology were found. Specific results and conclusions from the 2005 MTF pilot-scale testing are summarized here.

- There were no operational problems due to recarbonation or any other issues due to the oxygen firing over the range of CFB conditions tested.
- The sulfur capture with lime only to the back-end baghouse/FDA system was slightly lower with oxygen firing compared to air firing. There is evidence of some CO_2 being captured in the FDA, along with the SO_2.
- The sulfur capture in the furnace with limestone addition was higher with oxygen firing than with air firing. This was likely due in part to lower velocity with oxy-firing (longer residence time) and in part to more calcium in the furnace inventory during the oxygen fired tests.
- However, because of the higher capture in the furnace, the SO_2 entering the FDA was lower with oxygen firing. The percentage sulfur reduction across the FDA was similar for air and oxygen firing.
- As expected, the NO_x emissions were low with oxygen firing. Ammonia addition further reduced the NO_x emissions. When the base NO_x level was very low (50 ppmv), high stoichiometric ratios were required, which could lead to high ammonia slip. When NO_x emissions were somewhat higher (100 ppmv), more reasonable amounts of ammonia achieved about 50% reduction.

- CO emissions from bituminous coal were higher with oxygen firing than with air firing. This is likely due to the high CO_2 partial pressure in the flue gas suppressing the oxidation of CO. The CO emissions from pet coke were also low with oxygen firing.
- The N_2O and VOC emissions were low over the range of CFB conditions tested.
- The heat loss due to unburned carbon in the fly ash was slightly less with oxygen firing compared to air firing.
- The emissions of mercury and other trace metals when oxy-firing were at least as low as with air firing.
- The MBHE performed as expected in terms of heat transfer. The performance did not deteriorate or change due to changes in firing conditions of the test campaign: load, fuel, limestone, or air vs. O_2.
- The MBHE was opened for inspection after the test campaign and the surfaces were found to be clean with no evidence of solids accumulation over the brief test period.

The techno-economic study results are summarized in terms of the impact of retrofitting a small (90 MWe) CFB plant with O_2 firing and CO_2 capture technology. The most important impacts include plant overall thermal efficiency reduction, plant net power output reduction, plant avoided CO_2 emissions, area requirements for locating new equipment, the incremental investment cost, the incremental levelized cost of electricity (COE), and CO_2 mitigation cost results. These impacts are quantified in the following list:

- Plant Overall Thermal Efficiency Reduction ~12.0 percentage points
- Plant Net Power Output ~69 percent of air fired net output
- Plant CO_2 Capture ~94 percent
- Plant Avoided CO_2 Emissions ~0.80 kg/kWhr (~1.77 lbm/kWhr)
- Product CO_2 Content ~99.8 percent by volume (EOR application was assumed)
- Area Required for the ASU and GPS ~10,100 m^2 (~2.5 acres total)
- Incremental Investment Cost ~1,545 $/kW-new, ~1,060 $/kW-original
- Incremental COE ~3.1 cents/kWhr
- CO_2 Mitigation Cost ~38.8 $/tonne CO_2 avoided (~35.3 $/ton)

It should be emphasized that because of the small size of this unit (~ 90 MWe-original, 62 MWe-new - after retrofit) some of the impacts listed above are strongly influenced by economy of scale effects. The retrofit costs required and the resulting economic impacts are significantly greater than would be expected with more typically sized CFB based power plants. The relatively low steam conditions for this existing unit contribute to the large impact on efficiency and a smaller impact on the economics.

Remarks and Recommendations

Oxyfuel combustion is one of the promising near-term clean coal technologies being developed by the power industry. Firing coal with pure oxygen plus recycled flue gas (which is mainly CO_2) produces a product flue gas, which is highly CO_2-concentrated. This product flue gas can be simply dried and compressed for sequestration, leading to a near zero emissions power plant, or further processed into a high purity CO_2 product for various uses, such as enhanced oil recovery (EOR) or enhanced gas recovery (EGR).

Results by ALSTOM and others indicate that this is an attractive option for coal combustion, for the following reasons:

- It uses proven and reliable commercially available pulverized coal (PC) or circulating fluidized bed (CFB) boiler technology
- It uses commercially available CO_2 capture enabling technologies:
    - Oxygen production by cryogenic air separation
    - CO_2 purification, compression, and liquefaction
- There appear to be no show-stoppers in terms of:
    - Furnace operation
    - Heat transfer
    - Emissions of major gas species and trace elements

The development of this technology has proceeded to a level where it is now ready for large-scale demonstration. To prepare for demonstration of the oxygen-fired CFB concept, ALSTOM is now actively seeking partners for this important next step. Following a successful large-scale demonstration of the O_2 fired technology, commercial offerings would be possible. Based on these results, it is recommended that this technology be demonstrated.

ALSTOM also identified a need to investigate the design of the CO_2 capture ready oxygen-fired CFB power plant concept, which is the subject of Volume-II of this report.

1 INTRODUCTION

The greenhouse effect is created by the presence of a number of gases in the atmosphere, with CO_2 accounting for about 50 percent of this effect. Large quantities of CO_2 are produced from fossil fuel combustion. Coal fired power plants represent some of the largest point sources for CO_2 emissions and therefore these units will likely be early targets for conversion to CO_2 capture and sequestration if the US decides to regulate CO_2 emissions.

Previous studies (e.g., Bozzuto, et al., 2001) have shown that CO_2 capture from existing coal fired plants utilizing Lummus-Kerr/McGee's commercial monoethanolamine-based (MEA) flue gas scrubbing systems would reduce plant output and efficiency by about 40 percent and increase cost of electricity by almost 6.2 cents/kWh. More recently, advanced amine technologies by Fluor (Econamine FG Plus) and MHI (KS-I) show, on paper, marked improvements in energy penalty and decreases in cost of electricity for Greenfield power plants (International Energy Agency, 2004). The respective values for the Econamine FG Plus were found to be 21 percent and 1.8 cents/kWh, and the corresponding numbers for the KS-1 were 19 percent and 2.0 cents/kWh.

An alternative method for CO_2 capture is to burn fossil fuels in a mixture of oxygen and recycled flue gas (see schematic below). This concept eliminates almost all atmospheric nitrogen in the flue gas, thereby resulting in a flue gas stream that is composed primarily of CO_2, along with small quantities of moisture, oxygen, nitrogen, and trace gases like SO_2 and NO_x. This stream can be easily further processed into a high purity CO_2 product for various uses such as EOR (as was assumed in this study), EGR, or simply dried and compressed for sequestration.

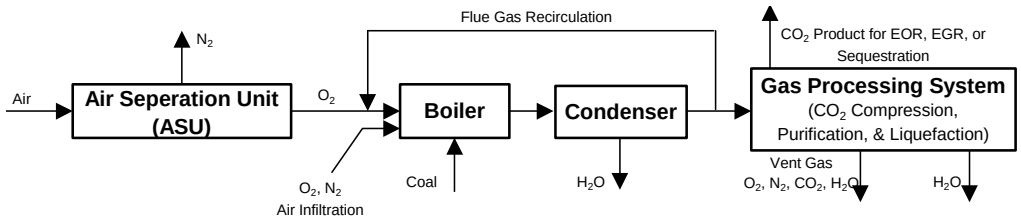

The combination of recycled flue gas/oxygen mixtures in concert with combustion in a circulating fluidized bed (CFB) boiler offers unique advantages compared to alternative methods of firing fossil fuels with oxygen. Unlike pulverized coal (PC) combustion or Stoker firing, circulating fluidized bed combustion has the advantage of controlling combustion chamber temperatures by modulating the recycle rate of cooled solids. This unique feature of a circulating fluidized bed combustor means that much higher percentages of oxygen can potentially be used in the combustion process than would be possible in alternate firing applications.

Though the primary motivation for using oxygen is to facilitate CO_2 capture, newly constructed CFB combustors will be able to capitalize on the use of high oxygen content firing. Specifically, the use of higher oxygen content will allow a more compact, less expensive CFB boiler and improve overall system thermal efficiency.

To investigate the feasibility of various carbon capture technologies, including the oxygen-fired CFB concept, the US Department of Energy's National Energy Technology

Laboratory (DOE) sponsored a two-phase program under a Cooperative Agreement DE-FC26-01NT41146. This work was executed from September 28, 2001 to October 27, 2004.

Phase I entailed a comprehensive study evaluating the technical feasibility and economics of alternate CO_2 capture technologies applied to Greenfield US coal-fired electric generation power plants. Thirteen cases, representing various levels of technology development, were evaluated. Seven cases represent coal combustion in CFB type equipment. Four cases represent Integrated Gasification Combined Cycle (IGCC) systems. Two cases represent advanced Chemical Looping systems. Marion, et al. reported the details of this work in 2003.

One of the thirteen cases studied was an oxygen-fired CFB boiler plant. In this concept, the fuel is fired with oxygen plus recirculated flue gas (mainly CO_2), yielding a flue gas containing over 80 percent CO_2. This flue gas can be easily processed to capture over 93 percent of the CO_2 for sequestration or use in enhanced oil or gas recovery (EOR or EGR). The Phase I study identified the O_2-fired CFB as having a near term development potential, because it uses conventional commercial CFB technology and commercially available enabling technologies such as cryogenic air separation and simple rectification or distillation based gas processing systems.

Phase II consisted of pilot-scale testing followed by a refined performance and economic evaluation of the oxygen-fired CFB concept. As a part of this workscope, ALSTOM modified its 3.0 MW_{th} (9.9 MMBtu/hr) Multiuse Test Facility (MTF) pilot plant to operate with O_2/CO_2 mixtures of up to 70 percent O_2 by volume. Tests were conducted with coal and petroleum coke fuels. The test objectives were to determine the impacts of oxygen firing on heat transfer, bed dynamics, potential agglomeration, and gaseous and particulate emissions. The test data was used to refine the design, performance, costs, and economic models developed in Phase-I for an O_2-fired CFB with CO_2 capture. Results from the Phase II study have been reported by Nsakala, Liljedahl, and Turek in 2004.

In 2004, ALSTOM identified several additional items needing investigation in preparation for large-scale demonstration of the oxygen-fired CFB concept, namely:

- Operation and performance of the moving bed heat exchanger (MBHE) to avoid recarbonation and also for cost savings compared to the standard bubbling fluid bed heat exchanger (FBHE).
- Performance of the back-end flash dryer absorber (FDA) for sulfur capture under high CO_2 / high moisture flue gas environment using calcined limestone in the fly ash and using fresh commercial lime directly in the FDA.
- Determination of the effect of recarbonation on fouling in the convective pass.
- Determination of back-pass convective section heat transfer performance.
- Assessment of the impact of oxygen firing on the mercury, other trace elements, and volatile organic compound (VOC) emissions.
- Development of a proposal-level retrofit design for an existing small utility scale CFB boiler retrofit with O_2 firing and CO_2 capture. Results and lessons learned

from this study would then be applicable to a future large scale demonstration of the O_2 fired CFB concept.

Hence, ALSTOM responded to a DOE Solicitation to address all these issues with further MTF pilot testing and a subsequent retrofit design study of oxygen firing and CO_2 capture on a relatively small, existing air-fired CFB plant. A relatively small CFB was selected as the study unit such that the analysis results would be closely applicable to a large-scale demonstration of this O_2 fired technology (ALSTOM's next major step in the development of this technology). ALSTOM received a contract award from the DOE to conduct a project entitled "Commercialization Development of Oxygen Fired CFB for Greenhouse Gas Control," under Cooperative Agreement DE-FC26-04NT42205.

Results from this study are discussed herein.

2 OXYGEN-FIRING TECHNOLOGY READINESS

This section presents a summary of the work on oxygen-fired CFB technology that ALSTOM Power Inc. (ALSTOM) has been developing under the sponsorship of the US Department of Energy/National Energy Technology Laboratory (DOE). A very brief summary of the oxygen-fired Pulverized Fuel technology that ALSTOM and others have been developing is also provided for sake of completeness. The basic message is that oxygen-firing technology for CO_2 capture uses existing commercial air-fired PC or CFB technologies and commercially available CO_2 capture enabling technologies, such as oxygen production through cryogenic air separation, and product gas processing. The technology is also applicable to existing PC or CFB units. Hence, as will be shown below, this technology is now ready for demonstration at a large scale.

2.1 O_2 Fired CFB Technology Development by ALSTOM

This section briefly describes the work on oxygen-fired CFB technology development by ALSTOM in Windsor, CT, USA, under the sponsorship of the DOE. Not discussed here is additional oxygen-fired development carried out by ALSTOM in Europe.

2.1.1 ALSTOM's Development Roadmap

Figure 2.1 is a roadmap showing the major steps ALSTOM has taken and proposes to take in developing the oxygen-fired CFB technology for CO_2 capture from concept inception to commercial deployment.

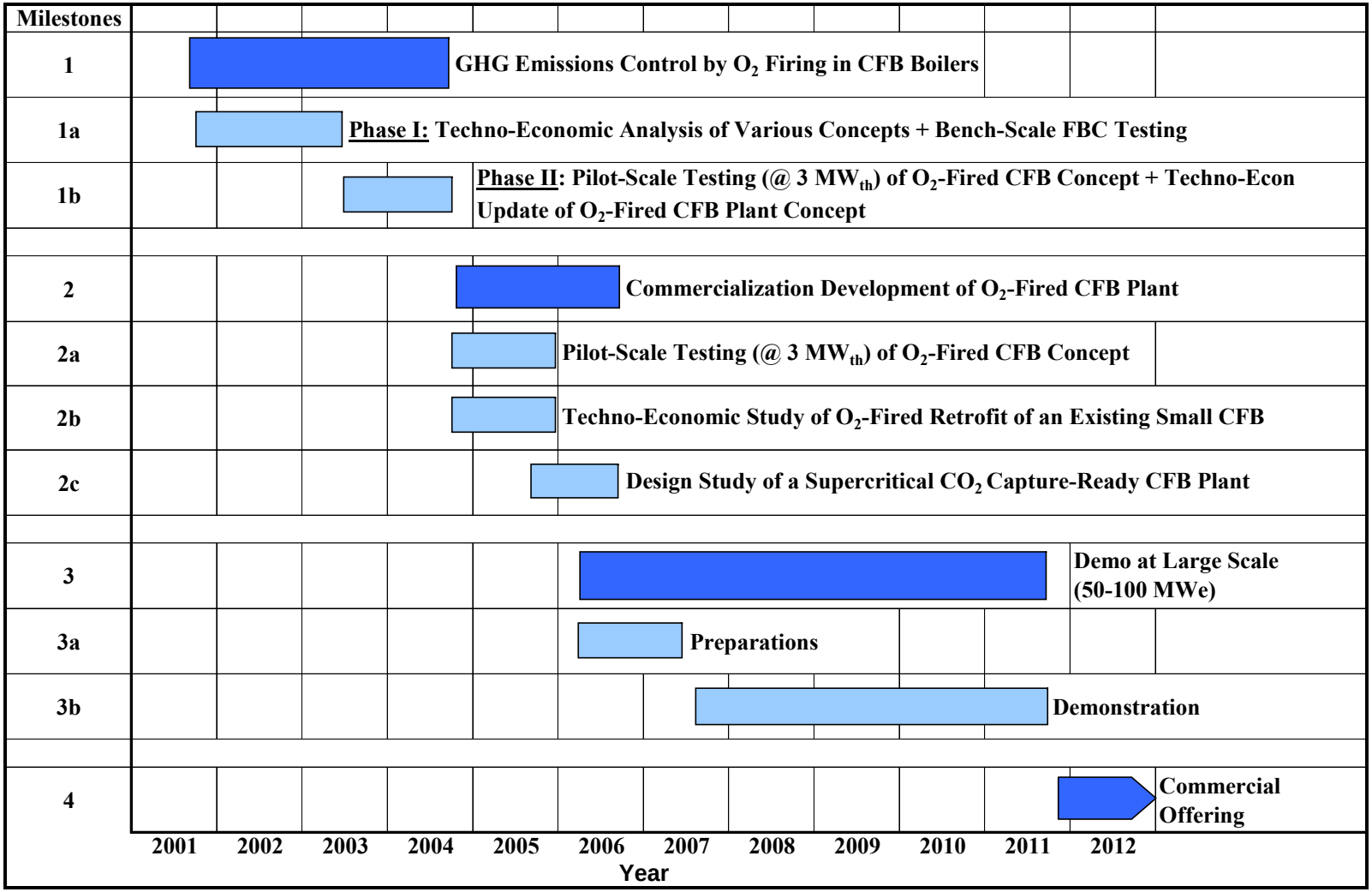

Figure 2.1: Oxygen-Fired CFB Technology Development Horizon

The roadmap steps are summarized as follows:

- Techno-economic analysis and Bench scale FBC testing (Milestone 1a)
  - Concept screening
    - □ Conceptual designs of various concepts
    - □ Performance analyses of various concepts
    - □ Cost estimates
    - □ CO_2 emissions
    - □ Economic analysis (levelized COE, Mitigation costs)
    - □ Results: Small boiler for Greenfield O_2 fired application → ~30% cost savings on Boiler Island as compared to air firing
  - Bench-Scale FBC Testing
    - □ Two coals and two petroleum coke samples
    - □ Two limestone samples
    - □ O_2/CO_2 mediums ranging from 21 to 70% O_2 globally
  - Selection of O_2 fired CFB as a near term development technology
    - □ Uses conventional commercial CFB technology
    - □ Uses commercially available enabling technologies (ASU to supply the O_2 to the combustion medium & GPS to upgrade the CO_2 concentrated flue gas into a CO_2 product, suitable for sequestration or use in EOR or EGR)
- O_2-Fired CFB Concept Evaluation (Milestone 1b)
  - Multi-use Test Facility (MTF) pilot-scale testing
    - □ One coal and one petroleum coke
    - □ Two limestone-types
    - □ O_2/CO_2 mediums ranging from 21 to & 70% O_2 locally & to 55% globally.
  - O_2-Fired CFB Plant Design, Performance, and Economic Analysis Refinement
- Comercialization Development of O_2 Fired CFB Plant (Milestone 2)
  - MTF testing (Milestone 2a)
    - □ One coal and one petroleum coke
    - □ Two limestone-types
    - □ O_2/CO_2 combustion medium of 30% O_2/70% CO_2
  - Study of a retrofit design of a 90-MWe air fired CFB to O_2 firing for CO_2 capture (Milestone 2b)
  - Design study of a CO_2 Capture Ready CFB Power Plant (supercritical steam conditions) (Milestone 2c)
- Remaining Technical Gaps
  - Limited number of fuel-types tested
  - Controls study (Startup/transition, trips, etc.)
  - Needs 50-100 MWe demonstration to show commercial readiness

- Next steps
  - Technology demonstration at a larger scale (50-100 MWe) (Milestone 3).
  - Commercial deployment (Milestone 4)
  - Future Advanced O_2 Production Technologies to improve the net plant efficiency and economics.

Each of the major steps on the roadmap is briefly described in the following sections.

2.1.2 Brief Project Descriptions

In 2001, ALSTOM began a two-phase program to investigate the feasibility of various carbon capture technologies. This program was sponsored under a Cooperative Agreement from the US Department of Energy's National Energy Technology Laboratory. Details of this work have been reported by Marion, et al., 2003.

Phase I Project Description

The Phase I workscope consisted of two major tasks, specifically:

- Task 1: Conceptual Technical and Economic Analyses of Thirteen Study Cases
- Task 2: Bench-Scale Fluidized Bed Combustion (FBC) Testing

ALSTOM was to make a recommendation to the DOE on next steps (i.e., whether or not to proceed to Phase II workscope), based on the results from the Phase I techno-economic analysis and bench-scale testing.

Task 1: Technical and Economic Analyses:
Work entailed a comprehensive study evaluating the technical feasibility and economics of alternate CO_2 capture technologies applied to Greenfield US coal-fired electric generation power plants. Thirteen cases, representing various levels of technology development, were evaluated. Seven cases represent coal combustion in CFB type equipment. Four cases represent Integrated Gasification Combined Cycle (IGCC) systems. Two cases represent advanced Chemical Looping systems. The key goals were to evaluate the impacts on the plant output, efficiency, and CO_2 emissions, resulting from the addition of various CO_2 capture systems to an array of CFB combustion based, IGCC based, and advanced Chemical Looping based power plants. Cost estimates were developed for these power plants and the impact of CO_2 capture on the levelized cost of electricity (COE) and on the mitigation cost for CO_2 ($/tonne of CO_2 avoided) were also evaluated. The thirteen study cases are briefly defined below.

Combustion Cases:

- Case-1: Air Fired Circulating Fluidized Bed (CFB) without CO_2 Capture (Base Case for Comparison to Case-2 through Case-7)
- Case-2: Oxygen Fired CFB with CO_2 Capture
- Case-3: Oxygen Fired CFB with CO_2 Capture (sequestration only option)
- Case-4: Oxygen Fired Circulating Moving Bed (CMB) with CO_2 Capture (advanced boiler concept)

- Case-5: Air Fired CMB with CO_2 Capture utilizing Regenerative Carbonate Process
- Case-6: Oxygen Fired CMB with Oxygen Transport Membrane (OTM) and CO_2 Capture
- Case-7: Indirect Combustion of Coal via Chemical Looping and CO_2 Capture

IGCC Cases:

- Case-8: Built and Operating Present Day IGCC without CO_2 Capture (Base Case for Comparison with Case-9)
- Case-9: Built and Operating Present Day IGCC with shift reaction and CO_2 Capture
- Case-10: Commercially Offered Future IGCC without CO_2 Capture (Base Case for Comparison with Case-11)
- Case-11: Commercially Offered Future IGCC with shift reaction and CO_2 Capture

Advanced Chemical Looping Cases:

- Case-12: Indirect Gasification of Coal via Chemical Looping (Base Case for comparison to Case-13)
- Case-13: Indirect Gasification of Coal and CO_2 Capture via Chemical Looping

Task 2: Bench-Scale Fluidized Bed Combustion (FBC) Testing:
The bench-scale FBC combustion testing supported the Task 1 case studies. The objective of Task 2 was to derive pertinent combustion performance and bed dynamic information under highly controlled operating conditions in a 102-mm (4-inch) inner diameter bubbling fluidized bed test facility. Results from oxy-fuel firing of three fuels, two coals and one delayed petroleum coke, were compared to those results obtained similarly from air firing.

Conclusion and Recommendation:

The results from the Phase I analysis led to the conclusion that further development work on the Oxygen-Fired CFB (Case-2) was justified. This recommendation was made to the DOE, based on the following rationale:

- This technology is the most near-term solution for CO_2 capture as it uses:
  - Commercial air-fired CFB technology
  - Commercially available CO_2 capture enabling technologies, specifically:
    - □ Oxygen production by cryogenic air separation
    - □ CO_2 capture, purification, compression, and liquefaction
- Oxygen firing produces a flue gas with high CO_2 concentration (>80%), which can be simply dried and compressed for sequestration or further processed into a high purity CO_2 product for varied uses, such as enhanced oil recovery (EOR) or enhanced gas recovery (EGR).

- The economics appear viable for a niche situation, such as enhanced oil recovery (EOR), whereby the CO_2 production cost is balanced by the revenue streams from the sale of electricity, CO_2 (for EOR) and N_2 (for oil reservoir pressure maintenance).

The DOE concurred with ALSTOM's recommendation of developing the O_2 fired CFB technology for capturing CO_2 and, hence, authorized the implementation of Phase-II workscope, as briefly described below.

Phase II Project Description

Phase II workscope consisted of pilot-scale testing followed by a refined performance and economic evaluation of the oxygen-fired CFB concept. As a part of this workscope, ALSTOM modified its 3.0 $_{MWth}$ (9.9 MMBtu/hr) Multiuse Test Facility (MTF) pilot plant to operate with O_2/CO_2 mixtures of up to 70 % O_2 by volume. Tests with coal and petroleum coke were conducted. The test objectives were to determine the impacts of oxygen firing on heat transfer, bed dynamics, potential agglomeration, and major gaseous (NO_x, N_2O, SO_2, and CO) and particulate emissions. The test data was used to refine the design, performance, costs, and economic models developed in Phase-I for an O_2-fired CFB with CO_2 capture (Case 2).

While carrying out the Phase II workscope, ALSTOM identified several items needing investigation in preparation for large-scale demonstration of the oxygen-fired CFB concept. They consisted of additional MTF pilot testing and a subsequent retrofit design study of oxygen firing and CO_2 capture on a relatively small existing air-fired CFB plant. Hence, ALSTOM responded to a DOE Solicitation to address the identified technical gaps. ALSTOM received a contract award from the DOE conduct a project entitled "Commercialization Development of Oxygen Fired CFB for Greenhouse Gas Control," under Cooperative Agreement DE-FC26-04NT42205, as briefly described in the following section

Commercialization Development of Oxygen-Fired CFB Plant

The objective of this work was to prepare the oxygen fired CFB technology for large scale demonstration, especially for an enhanced oil or gas recovery (EOR or EGR) application. This was accomplished through the performance of three major tasks:

MTF Testing
A pilot plant test of the oxygen-fired CFB concept was carried out in ALSTOM's (3.0 MW_{th} (9.9 MMBtu/hr) Multi-use Test Facility (MTF). The specifically targeted objectives of this testing include:

- Performance of the back-end flash dryer absorber (FDA) for sulfur capture under high CO_2 / high moisture flue gas environment using calcined limestone in the fly ash and using fresh commercial lime directly in the FDA.
- Operation and performance of the moving bed heat exchanger (MBHE) to avoid recarbonation ($CaO+CO_2 \rightarrow CaCO_3$) and also for cost savings compared to the standard fluidized bed heat exchanger (FBHE).
- Determination of the effect of recarbonation on fouling in the convective pass.

- Assessment of the impact of oxygen firing on the mercury, other trace elements, and volatile organic compound (VOC) emissions.

Commercial Design Implications
A conceptual retrofit design study to oxyfuel firing for CO_2 capture was carried out on an existing nominally 90-MWe CFB boiler. This study was developed on the basis of ALSTOM's commercial CFB design and performance rules as well as the technical information from previous and current MTF test campaigns. Results were used to calculate incremental costs required for retrofit and conduct economic analysis. This work sets the stage for developing a first of a kind demonstration of an oxygen-fired CFB project in North America.

CO_2 Capture-Ready Supercritical CFB Plant Design Study
An ongoing design study of a greenfield supercritical CFB plant with provisions for conversion to CO_2 capture at a later time.

2.1.3 Summary of Results

Results from Phases I and II have been reported elsewhere (Marion, et al., 2003; Nsakala, Liljedahl, and Turek, 2004). These reports define in detail the premises and assumptions used for technical and economic analyses of various power plant concepts evaluated, and test fuels, sorbents, and conditions used in the bench-scale FBC and pilot-scale MTF facilities. The results from these reports and from the present study are summarized comprehensively in Table 2.1 through Table 2.5. Key results:

- All the technologies evaluated would be capable of reducing CO_2 emissions by 90-99%
- Capturing CO_2 with any of these technologies would cause very significant impacts on power plant costs of electricity (COE) and CO_2 mitigation costs:
    - Incremental COE range: ~ 1.0 - 4.0 ¢/kWh over a respective reference power plant without CO_2 capture, equivalent to an increase of 20-80 %.
    - CO_2 mitigation costs range: 12- 47 $/tonne CO_2 avoided (11- 43 $/ton)
- Oxygen-fired CFB technology, which has been evaluated in more detail, indicates the following:
    - Cost competitiveness remains an important issue, as is the case with all other technologies, with incremental COE and CO_2 mitigation cost of about 3.4 ¢/kWh and 41 $/tonne (37 $/ton) CO_2 avoided, respectively
    - This technology is, nevertheless attractive for the following reasons:
        - It is the most near-term development technology, because it uses proven commercial air-fired CFB technology and commercially available CO_2 capture enabling technologies, such as oxygen production by cryogenic air separation (ASU), and gas processing (i.e., CO_2 cleanup, compression, and liquefaction)
        - Economic analysis looks viable for commercial EOR application, whereby electricity is sold to the power grid and CO_2 and N_2 (from the ASU) are sold to the oil field for stimulation and pressure maintenance, respectively.

    - Advancements in O_2 production technology promise to significantly reduce costs and improve efficiency and economics.
  - Testing of coal and petroleum coke in bench-scale O_2 fired FBC and pilot-scale CFB facilities indicate no technical barriers
    - CFB operation with oxidant streams containing high oxygen concentration (up to 70 % by volume) has been successfully demonstrated. This allows significant savings (~30%) on Greenfield CFB boiler investment costs
    - The tests also produced important data on heat transfer coefficients, combustion efficiency, emissions of major pollutants (carbon monoxide, sulfur dioxide, and nitrogen oxides), and trace emissions (volatile organic compounds, mercury, and other metals). This test data forms the design basis for scale-up of an oxyfuel fired CFB demonstration plant.
    - Test results indicate oxyfuel firing would have minimal impact on the boiler performance and emissions of major and trace pollutants (other than CO) were equal to or lower than with air firing.

- Oxygen-fired CFB technology is ready for large scale demonstration.

Table 2.1: Performance Analyses for Various Power Plant Concepts

Project	Study Case		Fuel Feed Rate		Oxygen Feed Rate			Net Plant Heat Rate		Net Plant Efficiency		Energy Penalty	Net Plant Output, kW
	#	Description	lbm/hr	Tonne/ Day	Source	lbm/hr	Tonne/ Day	Btu/kWh, HHV	kJ/kWh, HHV	% HHV	% LHV	%	kW
Greenhouse Gas (GHG) Phase I	Case 1	Air-fired CFB w/o CO2 Capture	167,509	1,824	Air	383,856	4,180	9,611	10,140	35.51	36.93	---	193,037
	Case 2	O2-Fired CFB w/ASU & CO2 Capture	163,085	1,776	ASU	328,546	3,578	13,546	14,291	25.20	26.21	29.0	134,514
	Case 3	O2-Fired CFB w/ASU & Flue Gas Sequestration	163,085	1,776	ASU	328,546	3,578	13,492	14,234	25.30	26.31	28.8	135,351
	Case 4	O2-Fired CMB w/ASU & CO2 Capture	164,349	1,790	ASU	329,930	3,593	13,894	14,658	24.56	25.55	30.8	132,168
	Case 5	Air-Fired CFB w/Carbonate Reg. Process & CO2 Capture	163,897	1,785	Air	384,361	4,185	11,307	11,929	30.18	31.39	15.0	161,184
	Case 6	O2-Fired CMB w/OTM & CO2 Capture	202,456	2,205	OTM	407,722	4,440	11,380	12,006	29.99	31.19	15.5	197,435
	Case 7	CMB Chemical Looping Combustion w/CO2 Capture	163,446	1,780	Air	373,240	4,064	11,051	11,659	30.88	32.12	13.0	164,484
	Case 8	Built & Operating IGCC w/o CO2 Capture	215,454	2,346	ASU	183,333	1,996	9,069	9,568	37.63	39.14	---	263,087
	Case 9	Built & Operating IGCC w/ CO2 Capture	238,694	2,599	ASU	204,167	2,223	11,467	12,098	29.76	30.95	20.9	230,515
	Case 10	Commercially Offered IGCC w/o CO2 Capture	210,010	2,287	ASU	174,309	1,898	9,884	10,428	34.53	35.91	---	235,294
	Case 11	Commercially Offered IGCC w/CO2 Capture	225,822	2,459	ASU	187,431	2,041	12,441	13,125	27.43	28.53	20.6	201,004
	Case 12	Chemical Looping Gasification w/o CO2 Capture	197,428	2,150	Air	150,935	1,644	8,248	8,702	41.38	43.03	---	265,146
	Case 13	Chemical Looping Gasification w/ CO2 Capture	213,582	2,326	Air	164,043	1,786	9,249	9,758	36.90	38.38	10.8	256,830
GHG Phase II	Case 2	O2 -Fired CFB w/ASU & CO2 Capture (updated from Phase I)	162,894	1,774	ASU	328,342	3,575	13,152	13,875	25.95	26.99	26.9	138,402
Commercialization Development of O_2-Fired CFB Plant (present study)	Case-1	Air fired CFB w/o CO2 Capture	75,111	818	Air	168,811	1,838	9,328	9,841	36.59	38.05	---	90,427
	Case-2	CFB Retrofit with O2 Firing and CO2 Capture	74,562	812	ASU	168,180	1,831	13,716	14,470	24.88	25.88	32.0	62,144

GHG Phase I: Greenfield plants; GHG Phase III: Update of Case 2 from Phase I; Present Study: Case-2 is a retrofit of existing plant Case-1.
Energy Penalty is relative to the appropriate base case.

Table 2.2: Cost Analyses for Various Power Plant Concepts

Project	Study Case		Net Plant Output	Total Investment Cost, EPC Basis		Operating & Maintenance (O&M) Costs					Total O&M
	#	Description	kW	k$	$/kW	Fixed		Variable @ 80% Capacity Factor		Total, k$	¢/kWh
						k$	$/kW	k$	$/kWh		
Greenhouse Gas (GHG) Phase I	Case 1	Air-fired CFB w/o CO2 Capture	193,037	251,804	1,304	5,658	29.31	5,587	0.0041	11,245	0.83
	Case 2	O2-Fired CFB w/ASU & CO2 Capture	134,514	328,589	2,443	7,854	58.39	8,820	0.0094	16,674	1.77
	Case 3	O2-Fired CFB w/ASU & Flue Gas Sequestration	135,351	320,638	2,369	8,061	59.55	8,654	0.0091	16,715	1.76
	Case 4	O2-Fired CMB w/ASU & CO2 Capture	132,168	337,402	2,553	7,899	59.77	8,889	0.0096	16,788	1.81
	Case 5	Air-Fired CFB w/Carbonate Reg. Process & CO2 Capture	161,184	270,232	1,677	5,799	35.98	8,264	0.0073	14,064	1.25
	Case 6	O2-Fired CMB w/OTM & CO2 Capture	197,435	468,919	2,375	6,538	33.11	10,134	0.0073	16,671	1.20
	Case 7	CMB Chemical Looping Combustion w/CO2 Capture	164,484	273,568	1,663	5,797	35.25	8,015	0.0070	13,812	1.20
	Case 8	Built & Operating IGCC w/o CO2 Capture	263,087	411,731	1,565	10,180	38.70	7,746	0.0042	17,926	0.97
	Case 9	Built & Operating IGCC w/ CO2 Capture	230,515	502,330	2,179	12,139	52.66	9,202	0.0057	21,341	1.32
	Case 10	Commercially Offered IGCC w/o CO2 Capture	235,294	341,468	1,451	9,344	39.71	6,900	0.0042	16,244	0.99
	Case 11	Commercially Offered IGCC w/CO2 Capture	201,004	412,377	2,052	11,068	55.06	9,111	0.0065	20,178	1.43
	Case 12	Chemical Looping Gasification w/o CO2 Capture	265,146	296,991	1,120	8,814	24.47	8,223	0.0044	12,478	0.92
	Case 13	Chemical Looping Gasification w/ CO2 Capture	256,830	355,132	1,383	9,920	30.82	11,812	0.0066	17,804	1.21
GHG Phase II	Case 2	O2 -Fired CFB w/ASU & CO2 Capture (updated from Phase I)	138,402	329,610	2,382	7,859	56.78	8,835	0.0091	16,694	0.99
Commercialization Development of O_2-Fired CFB Plant (present study)	Case-1	Air fired CFB w/o CO2 Capture	90,427	---	---	3,529	39.03	2,763	0.00436	6,293	0.99
	Case-2	CFB Retrofit with O2 Firing and CO2 Capture	62,144	96,024	1,545	5,330	85.77	6,115	0.01404	11,445	2.63

Cost Bases: GHG Phase I : 2003 Dollars; GHS Phase II: 2004 Dollars; Commercialization Devel. Of O2-Fired CFB Plant : 2005 Dollars
Present Study: Case-1 is an existing unit, no investment cost considered; Case-2 investment costs are for retrofit of the existing unit.

Table 2.3: Cost of Electricity and Avoided Cost for Various Power Plant Concepts

Project	Study Case		Net Plant Output	Levelized Cost of Electricity (Cents/kWh)						CO_2 Emissions		Avoided CO_2 Cost	
	#	Description	kW	Financial	Fixed O&M	Variable O&M	Fuel	Total	Incre-mental COE	lbm/ kWh	g/ kWh	$/ton	$/tonne
Greenhouse Gas (GHG) Phase I	Case 1	Air-fired CFB w/o CO2 Capture	193,037	2.49	0.42	0.41	1.20	4.53	---	2.00	907	---	---
	Case 2	O2-Fired CFB w/ASU & CO2 Capture	134,514	4.73	0.85	0.95	1.72	8.25	3.72	0.18	82	41	45
	Case 3	O2-Fired CFB w/ASU & Flue Gas Sequestration	135,351	4.53	0.85	0.91	1.69	7.98	3.45	0.02	9	35	38
	Case 4	O2-Fired CMB w/ASU & CO2 Capture	132,168	4.86	0.85	0.96	1.74	8.41	3.88	0.21	95	43	48
	Case 5	Air-Fired CFB w/Carbonate Reg. Process & CO2 Capture	161,184	3.29	0.51	0.73	1.41	5.95	1.42	0.01	5	14	16
	Case 6	O2-Fired CMB w/OTM & CO2 Capture	197,435	4.43	0.47	0.73	1.42	7.05	2.53	0.15	68	27	30
	Case 7	CMB Chemical Looping Combustion w/CO2 Capture	164,484	3.26	0.50	0.70	1.38	5.84	1.32	0.07	32	13	15
	Case 8	Built & Operating IGCC w/o CO2 Capture	263,087	3.20	0.55	0.42	1.13	5.30	---	1.81	821	---	---
	Case 9	Built & Operating IGCC w/ CO2 Capture	230,515	4.40	0.75	0.57	1.43	7.15	1.85	0.23	104	23	26
	Case 10	Commercially Offered IGCC w/o CO2 Capture	235,294	3.00	0.57	0.42	1.24	5.22	---	1.98	898	---	---
	Case 11	Commercially Offered IGCC w/CO2 Capture	201,004	4.19	0.79	0.65	1.56	7.18	1.95	0.15	68	23	25
	Case 12	Chemical Looping Gasification w/o CO2 Capture	265,146	2.34	0.47	0.44	1.03	4.28	---	1.71	776	---	---
	Case 13	Chemical Looping Gasification w/ CO2 Capture	256,830	2.85	0.55	0.66	1.16	5.22	0.93	0.09	41	11	12
GHG Phase II	Case 2	O2 -Fired CFB w/ASU & CO2 Capture (updated from Phase I)	138,402	4.5	0.8	0.9	1.6	7.9	3.4	.17	77	37	41
Commercialization Development of O_2-Fired CFB Plant (present study)	Case-1	Air fired CFB w/o CO2 Capture	90,427	---	---	---	---	---	---	1.94	880	---	---
	Case-2	CFB Retrofit with O2 Firing and CO2 Capture	62,144	2.86	0.67	0.97	0.57	3.12	3.12	0.17	77	35	39

Cost Bases: GHG Phase I : 2003 Dollars; GHS Phase II: 2004 Dollars; Commercialization Devel. Of O2-Fired CFB Plant : 2005 Dollars.
Phase I and Phase II: Incremental COE and CO_2 avoided costs are relative to the appropriate base case.
Present Study: All Case-2 COE components and CO_2 avoided cost are incremental relative to Case-1. Total COE includes a $15/ton credit for CO_2 product (equivalent to 1.95 ¢/kWh).

Table 2.4: Summary of Bench-Scale FBC Testing

Fuel	Test No.	Combustion Gas Medium	Gas Velocity		Stoich	Ca/S Mole Ratio	Bed Temperature		Gaseous Emissions						Fuel Combustion	Unburned Carbon in Fly Ash
									NOx		SO_2		CO			
			ft/sec	m/sec			°F	°C	lb/MMBtu	kg/GJ	lb/MMBtu	kg/GJ	lb/MMBtu	kg/GJ	%DAF Basis	% Dry Basis
Base Case CFB Coal	BCCa	Air	3.27	1.00	2.10	---	1676	913	1.06	0.46	2.26	0.97	0.12	0.05	88.0	25.8
	BCCa1	21% O_2/79% CO_2	3.18	0.97	2.02	---	1635	890	0.93	0.40	2.21	0.95	0.38	0.16	89.0	20.7
	BCCb	30% O_2/70% CO_2	1.77	0.54	2.11	---	1683	917	0.90	0.39	2.42	1.04	0.32	0.14	90.8	20.7
	BCCc	40% O_2/60% CO_2	2.77	0.84	2.95	---	1681	916	1.01	0.44	2.70	1.16	0.30	0.13	95.1	10.3
	BCCd	50% O_2/50% CO_2	2.69	0.82	2.59	---	1871	1022	0.84	0.36	2.73	1.17	0.21	0.09	---	---
	BCCd1	50% O_2/50% CO_2	2.74	0.83	2.57	---	1908	1042	0.83	0.36	2.78	1.19	0.23	0.10	95.0	12.2
	BCCe	70% O_2/30% CO_2	2.89	0.88	3.67	---	1805	985	0.82	0.35	2.96	1.27	0.48	0.21	95.3	10.3
	BCCf	Air	2.78	0.85	2.51	3.5	1669	909	1.32	0.57	0.42	0.18	0.21	0.09	91.0	20.6
	BCCg	30% O_2/70% CO_2	2.72	0.83	2.73	3.5	1708	931	1.27	0.55	1.61	0.69	0.35	0.15	90.7	21.1
Illinois #6 hvCb Coal	Ill#6a	Air	2.73	0.83	2.86	---	1632	889	1.42	0.61	5.96	2.56	0.23	0.10	98.9	5.7
	Ill#6b	30% O_2/70% CO_2	2.58	0.79	3.93	---	1591	866	1.63	0.70	5.59	2.40	0.48	0.21	99.1	5.8
	Ill#6b1	30% O_2/70% CO_3	2.68	0.82	2.85	---	1674	912	1.35	0.58	5.45	2.34	0.38	0.16	---	---
	Ill#6c	50% O_2/50% CO_2	2.69	0.82	4.74	--	1674	912	1.32	0.57	5.53	2.38	0.32	0.14	99.2	4.5
	Ill#6d	Air	2.80	0.85	3.14	3.5	1683	917	1.21	0.52	0.67	0.29	0.16	0.07	98.9	5.8
	Ill#6e	30% O_2/70% CO_2	2.70	0.82	2.80	3.5	1691	922	1.32	0.57	1.83	0.79	0.38	0.16	98.5	6.8
Delayed Petroleum Coke	DPCa	Air	2.77	0.84	2.80	---	1662	905	2.15	0.92	1.37	0.59	0.09	0.04	99.9	28.3
	DPCb	30% O_2/70% CO_3	2.79	0.85	2.70	---	1759	959	1.79	0.77	1.33	0.57	0.26	0.11	99.8	38.9
	DPCb1	30% O_2/70% CO_2	2.59	0.79	3.81	---	1603	873	1.86	0.80	1.26	0.54	0.33	0.14	---	---
	DPCc	Air	2.74	0.83	2.96	3.50	1657	903	1.75	0.75	0.56	0.24	0.08	0.04	99.8	39.9
	DPCd	30% O_2/70% CO_3	2.82	0.86	2.83	3.50	1784	973	1.33	0.57	0.55	0.24	0.25	0.11	99.9	34.9

(From Marion et al., 2003)

Table 2.5: Summary of Previous Pilot-Scale Test Results

Test Point	Fuel	Comb. Medium	Sorbent-Type	Global O_2	Local O_2	Fuel Firing Rate		Ca/S Mole Ratio	O_2	N_2	SO_2		CO		NO_x		N_2O		Sulfur Capture
				%	%	MMBtu/hr	GJ/hr		%	%	lb/MMBtu	kg/GJ	lb/MMBtu	kg/GJ	lb/MMBtu	kg/GJ	lb/MMBtu	kg/GJ	%
A1	Tri-Star mvb Coal	Air	Chemstone	21	21	3.96	4.18	2.0	3.9	80.0	0.07	0.03	0.09	0.04	0.32	0.15	--		98
B1	Tri-Star mvb Coal	O_2/CO_2 (Low Enrichment)	Chemstrone	21	26	4.07	4.29	2.0	3.2	8.0	0.58	0.28	0.10	0.05	0.14	0.07	--		82
B2				20	26	3.81	4.02	2.1	3.4	5.0	0.68	0.33	0.15	0.07	0.07	0.03	0.10	0.05	79
B3				27	40	2.24	2.36	2.1	7.9	15.0	0.17	0.08	0.12	0.06	0.10	0.05	0.06	0.03	95
B4				31	40	4.78	5.04	2.0	2.8	13.0	0.71	0.34	0.11	0.05	0.05	0.02	0.07	0.03	78
B5				30	40	3.94	4.16	2.0	4.3	13.0	0.36	0.17	0.08	0.04	0.06	0.03	0.05	0.03	89
C1	Tri-Star mvb Coal	O_2/CO_2 (High Enrichment)	Aragonite	36	49	4.24	4.47	1.6	9.3	16.7	1.07	0.51	0.18	0.09	0.14	0.07	--		66
C2				37	50	5.69	6.00	2.0	4.2	16.5	0.52	0.25	0.37	0.18	0.05	0.02	--		84
C3				43	60	6.57	6.93	2.0	3.5	13.0	0.42	0.20	0.18	0.09	0.06	0.03	--		87
C4				49	67	7.87	8.30	2.0	3.4	11.0	0.44	0.21	0.15	0.07	0.05	0.02	0.05	0.02	86
C5				50	70	7.57	7.99	2.1	4.9	19.0	0.36	0.17	0.15	0.07	0.09	0.04	0.07	0.03	89
C6				50	70	7.56	7.98	2.1	3.9	17.0	0.79	0.38	0.16	0.08	0.06	0.03	0.04	0.02	75
C7				50	70	7.57	7.99	2.1	4.4	17.3	0.91	0.44	0.22	0.11	0.05	0.02	0.05	0.02	71
D1	Delayed Pet. Coke	O_2/CO_2 (High Enrichment)	Aragonite	43	61	6.28	6.63	2.0	2.9	17.4	0.38	0.18	0.09	0.04	0.07	0.04	0.04	0.02	94.7
D2				49	70	7.08	7.47	1.9	3.1	17.4	0.05	0.02	0.04	0.02	0.11	0.05	0.02	0.01	99.3
D3				49	70	7.92	8.36	1.7	3.3	17.4	0.30	0.14	0.05	0.02	0.08	0.04	0.01	0.00	95.9
D4				49	70	7.92	8.36	1.7	2.9	17.4	0.44	0.21	0.05	0.02	0.07	0.03	0.00	0.00	93.8
D5				49	70	7.62	8.04	1.8	2.7	12.0	0.08	0.04	0.05	0.02	0.09	0.04	0.01	0.00	98.8

(From Nsakala, Liljedahl, Turek, 2004)

2.2 O_2 Fired Pulverized Fuel Technology Development

Other research teams are also making considerable progress on oxy-combustion technology development for CO_2 capture. Based on information in the open literature, it appears that ALSTOM is the only one developing this technology for both pulverized coal (PC) and circulating fluidized bed (CFB) boiler applications. Others are developing this technology solely for PC application. Below is a brief summary of the advances that have been made over the years in the areas of techno-economic analysis, combustion testing, and pilot-scale demonstration.

2.2.1 Techno-Economic Analysis

Table 2.6 summarizes recent results by IEA Greenhouse Gas R&D Program on CO_2 capture from an advanced supercritical PC plant (Dillon, et al., 2005). This study shows the following techno-economic impacts for capturing 90% of the CO_2 from this Oxy-combustion plant, compared to a reference air-fired plant without CO_2.

- Energy penalty: 8.9 % point, is equivalent to 20%
- Incremental cost of electricity (COE): 2.3 ¢/kWh, is equivalent to 46%
- CO_2 mitigation cost: 40 $/tonne of CO_2 avoided (36 $/ton)

The International Flame Research Foundation (IFRF) also recently published a report summarizing the results of a literature survey on the subject of oxy-combustion with recycled flue gas (Tan, et al., 2005). The objective of the study was to provide an overview of the current state-of-the art technology from a techno-economic standpoint.

It appears that the only common thread to the studies reported by IFRF is that everyone used a cryogenic air separation unit (ASU) as a means of supplying oxygen to the boiler. Virtually all other parameters (plant size, fuel-type, steam conditions, etc.) are different. Hence, it is difficult to draw conclusions based on consistent comparison criteria. Suffice it to say that the techno-economic impact values reported by IEA are within the ranges reported here (see Table 2.6), namely:

- Significant CO_2 reductions (80-100%) are achievable
- Energy penalty ranges from about 15 - 31% compared to respective reference plant without CO_2 capture.
- CO_2 mitigation costs range from about 21 to more than 44 $/tonne of CO_2 avoided (40 $/ton)

The cryogenic air separation process bears a major responsibility in the energy penalty and high cost associated with the oxy-combustion process. It is anticipated that advanced oxygen production technologies such as oxygen transport membrane will be helpful in the future in reducing the energy penalty and the specific cost of oxygen production.

Table 2.6: Techno-Economic Analysis Results of Oxy Combustion of Coal for CO_2 Capture (from Dillon, et al., 2005)

Parameter	Physical Units	ASC PC Air Fired Power Pant Without CO_2 Capture	ASC PC Oxy-Combustion Power Plant With CO_2 Capture
Steam Cycle	bara/°C/°C	290/600/620	290/600/620
Fuel Input	kg/s	59.19	58.09
Fuel Heating Value	MJ/kg (LHV)	25.86	25.86
Fuel Heat Input	MW_{th} (LHV)	1530.8	1502.2
O_2 Input	tonne/day	---	10373
Gross Power Output	MWe	740	737
ASU Power	MWe	---	87
CO_2 Compression & Purification	MWe	---	65
Power Plant Auxiliaries	MWe	63	54
Net Power Output	MWe	677	532
Gross Efficiency	% LHV	48.3	49.1
Net Efficiency	% LHV	44.3	35.4
CO_2 Capture Energy Penalty	% points	---	8.9
Specific Investment Costs	US$/kWe (net)	1513	2342
Fuel Cost	US$/GJ	1.5	1.5
Cost of Electricity, COE	US¢/kWh	4.98	7.28
CO_2 Emissions	t/h	489	45
CO_2 Captured	g/kWh	---	831
CO_2 Mitigation Cost	US$/tonne	---	36

Table 2.7: Summary of Techno-Economic Studies of Coal Power Plant (From Tan, et al, 2005)

Author(s)	Description	Economic Analysis Results	Plant Efficiency (%)	Efficiency Relative to Base Case	Relative CO_2 Reduction
McPhail et al. (1997)	660 MW power plant retrofitted with different heat integration configurations: net output reduced to 446 – 513 MW	Optimal cost of power is 55% higher than in base case; capital cost increases by 50%	28.5 – 32.7	0.692 – 0.794	95 – 100%
Okawa et al. (1997)	1000 MW power plant with power from ASU and CO_2 capture supplied by original plant	Retrofit cost is 3.8 billion yen per year	29.1	0.735	--
Nsakala et al. (2001)	433 MW baseline plant with power for ASU and CO_2 capture supplied by original plant; net power after retrofit is 280 MW.	CO_2 capture cost of US$42 per ton	24.1	0.657	82.3%
Simbeck (2001)	300 MW power plant fired with sub-bituminous coal; power for ASU and CO_2 capture supplied by auxiliary NGCC plant.	Total cost relative to baseline plant is 2.98; CO_2 capture cost is US$28 per ton.	29.2	0.807	87.2%
Andersson and Maksinen (2002)	865 MW lignite-fired baseline plant with power ASU and CO_2 capture supplied by original plant; net power after retrofit is 623 – 697 MW.	Total cost relative to baseline plant is 0.96	30.7 – 34.3	0.721 – 0.805	--
Singh et al. (2003)	400 MW power plant fired with sub-bituminous coal; power for ASU and CO_2 capture supplied by auxiliary NGCC plant.	Retrofit cost is US$76.4 million, resulting in a 20% increase in power cost. CO_2 capture cost is US$35 per ton	---	---	---
Kakaras et al. (2004)	280 MW baseline power plant; net output after retrofit 184 MW	---	23.8	0.649	79%
Varagani et al. (2004)	500 MW baseline power plant; net power after retrofit 405 – 409 MW	Power cost 33% higher than baseline; CO_2 capture cost is US$19 – 21 per ton	29.9 – 31.4	0.808 – 0.849	99%

2.2.2 Combustion Testing in Pilot-Scale and Demonstration Plant

Table 2.8 and Table 2.9 list the major test work carried out by various research organizations in O_2 fired pilot-scale and demonstration plants (Wall, et al. 2004). The studies focused on pulverized fuel (PC) firing in oxygen with recycled flue gas. The

pilot-scale facilities ranged in firing rate from 0.3 to 3.0 $_{MWth}$; the demonstration plant was an 88 MW_{th} facility. A variety of combustion performance issues were evaluated including heat transfer, gaseous emissions (NO_x, SO_2), particulate emissions, etc. In summary:

- ***Flue Gas Recycle Ratio (R)***, defined as: $\boldsymbol{R} = \dfrac{Mrfg}{Mrfg + Mpfg}$,
  - where ***M*** is flue gas mass flow rate
  - ***rfg:*** recycled flue gas
  - ***pfg:*** product flue gas

This parameter is important to optimize, because it influences adiabatic flame temperature and heat transfer.

Table 2.8: List of Pilot-Scale Studies (from Tan, et al., 2005; Wall, et al., 2004)

Organization	Furnace used	Focus of Study
EERC and ANL	10 million BTU/hr. (~3.0 MW_{th}) tower furnace with internal square furnace cross section of 1x1 m and 6 m long – using a single swirl burner	• Demonstrating the technical feasibility of the CO_2 recycle boiler • Demonstrating the ratio of recycle gas to O_2 for achieving similar performance to air fired system • Quantifying the observable operational changes in flame stability, pollution emissions and burnout • Providing as basis for scaling experimental results to commercial scale
IFRF	IFRF Furnace #1: 2.5 MWth horizontal furnace with internal square cross section of 2x2 m and 6.25 m long – using an air staged swirl burner	• Optimizing O_2 - RFG firing conditions to yield similar heat transfer performance to air fired system • Evaluating the impact of O_2-RFG process on furnace performance, including flame ignition and stability, heat transfer, combustion efficiency and pollutant emissions as compared to air fired system
IHI	IHI's 1.2 MWth combustion test furnace: a horizontal cylinder furnace with 1.3 m inner diameter and 7.5 m in length – using a swirl burner	• Combustion characteristic of pulverized coal O_2/CO_2 mixture • Evaluation of the effect of wet or dry recycled flue gas on the combustion process
Air Liquide and B&W	1.5 MWth pilot scale boiler with air staged combustion system	• Demonstrating the technical feasibility of conversion from air firing to O2-RFG firing for large scale boiler • Highlighting the impact of O2-RFG process on emissions and boiler efficiency
CANMET	Vertical Combustor Research Facility (0.3 MWth): A cylindrical down-fired and adiabatic vertical combustor with an inner diameter of 0.60 m and a length of 6.7m - using a swirl burner	• Pulverized coal combustion behavior in various O2-RFG mixtures compared with air fired system • Demonstrating the technical factors on the combustion performance

Table 2.9: Demonstration Plant Studies (from Tan, et al., 2005; Wall, et al., 2004)

Organization	Furnace Used	Focus of Study
Rolls Royce International Combustion Ltd.	88 MWth Combustion test rig with 5.5. m^2 x 21 m long using a conventional 35MWth low NO_x burner	• To assess the feasibility of adopting flue gas recirculation and oxygen injection on an existing coal fired thermal power plant • To gain experience in the operation of oxy-coal with RFG burner

Wet or Dry flue Gas Recycle: Wet flue gas recycle was found to be more advantageous than dry flue gas recycle from the standpoints of capital investment and operating cost.

NO_x Emissions: NO_x emissions were found to be much lower in oxy-combustion as compared to air firing (see Table 2.10). This is due primarily to:

- Elimination of thermal NO_x
- Conversion of some of the NO_x in the recycle leg to molecular nitrogen (N_2)

SO_2 Emissions: There is a substantial reduction of SO_2 formation in oxy-combustion compared to air firing, presumably due to some sulfur retention in the fly ash/particulates (see Table 2.11).

Table 2.10: Summary of NO_x Emissions Results (From Tan, et al., 2005)

Author(s)	Emission (mg/MJ)	Conversion Ratio	Conclusion
Croiset and Thambimuthu (2001)	Air: 340 RFG (28% O_2): 100 RFG (42% O_2): 210	Air: 35%[1] RFG (28% O_2): 10% RFG(42% O_2): 22%	High NO_x concentration inside the furnace but lower NO_x emissions in flue gas than baseline case
Chui et al. (2003)	Air: 110 RFG: 140 – 150	Air: 14% RFG: 18 –19%	NO_x production strongly dependent on swirl number. RFG mode can produce the same or even higher amount of NO_x within the combustor than in baseline case. The observed reduction of NO_x in exhaust gas is due primarily to the fraction of NO_x removed with the recycle stream.
Kiga et al. (1997)	Air: 75 – 370 RFG: <53	Air: 7 – 35% RFG: <5%	The conversion ratio of fuel nitrogen into NO_x is much higher in baseline case than with oxy-coal FRG combustion.
Nozsaki et al. (1997)	---	---	The recycled NO_x is rapidly reduced to HCN or NH_3 in the combustion zone and NO_x formation for O_2/CO_2 combustion is lower than for air combustion
Kimura et al. (1995)	Air: 340 RFG: <90	Air: 30 – 33% RFG: <8%	NO_x conversion ratio in O_2/CO_2 combustion is very much lower than that in normal air combustion because of the higher reduction in the combustion zone.
Hu et al. (2000)	---	Air: 28%[2] Oxy-coal: 14%	NO_x emission is strongly dependent on the O_2 concentration. Peak value of NO_x emission in air combustion is double the value in O_2+CO_2 combustion.
Woycenko et al. (1994)	Air: 320 RFG: 50 – 150	Air: 30%[3] RFG: 5 – 14%	NO_x formation is much lower in oxy-coal with RFG combustion than in baseline case.
Zheng and Furimsky (2003)	---	Air: RFG: up to 2%	NO_x formation in O_2/CO_2 atmosphere predicted to be reduced by a factor of at least 15 relative to air combustion based on chemical equilibrium calculations.
Liu and Okazaki (2003)	---	Air: 30% ARFG: 4 – 8%	Very high flue gas recycle ratios are possible through heat recirculation. Stable flames at 15% O_2 allows reduction in fuel-N conversion by a factor of 7.
Chatel-Pelage et al. (2003)	Air: 120 – 190 RFG: 35 – 90	---	1.5 MAW Pilot-scale demonstration of potential for drastic NO_x reduction.

[1] Conversion made using coal HHV.

[2] Both values are at 1273K temperature and at the stoichiometric point. The oxy-coal value is with 80% CO_2 in inlet gas.

[3] Conversion made using coal LCV

Table 2.11: Summary of SO_2 Emissions Results (From Tan, et al., 2005)

Author(s)	Conversion (%)		Experimental Conditions
	Air Combustion	Oxy-Fuel Combustion	
Woycenko et al. (1994)	96	60 – 75	Experimental results using Göttelborn coal with 1.02% sulfur.
Kiga et al. (1997)	70 – 78	37 – 41	Experimental results using 3 different bituminous coals with 0.38 – 0.96% sulfur.
Hu et al. (2000)	6 – 12*	5 – 12*	20 – 100% O_2 mixed with N_2 or CO_2 at temperature of 1123 – 1573 K and equivalence ratios 0.4 – 1.4.
Croiset and Thambimuthu (2001)	91	56 – 66	Experimental results using US eastern bituminous coal with 0.96% sulfur; 28 – 42% oxygen in O_2/RFG mixture using oxygen feed of 90 – 100% purity.
Zheng and Furimsky (2003)	91 – 100	90 – 100	Computations based on chemical equilibrium using F*A*C*T

* In mg SO_2 (as S) per g coal

2.2.3 Vattenfall Demonstration Project

German electricity company Vattenfall Europe, a subsidiary of a Swedish electricity group Vattenfall, has proposed to build a first of a kind 30 $_{MWth}$ pilot plant next to the Schwarze Pumpe coal-fired power station in Brandeburg, Germany. This facility, which will burn German lignite, will be oxyfuel fired. In this case, pulverized fuel will be burned in pure oxygen plus recirculated flue gas (mainly carbon dioxide). The carbon dioxide formed in the combustion process can be easily separated and sequestered in rock formations, leading to zero-emissions into the atmosphere. The primary objective of the 30 MWth Vattenfall project is to demonstrate the oxyfuel process for carbon dioxide capture. ALSTOM has supported Vattenfall in the development of the oxyfuel concept, depicted in Figure 2.2.

The next step will be to design and build a 250 MWe demonstration power plant for commercial operation by 2015. Vattenfall estimates that this demonstration plant will cost ~ € 40 million and will take three years to build, with commissioning in 2008. ALSTOM has been selected to supply the boiler for this demonstration project.

More details are given on the following Webpage:
(http://www.thelocal.se/article.php?ID=1459&date=20050519).

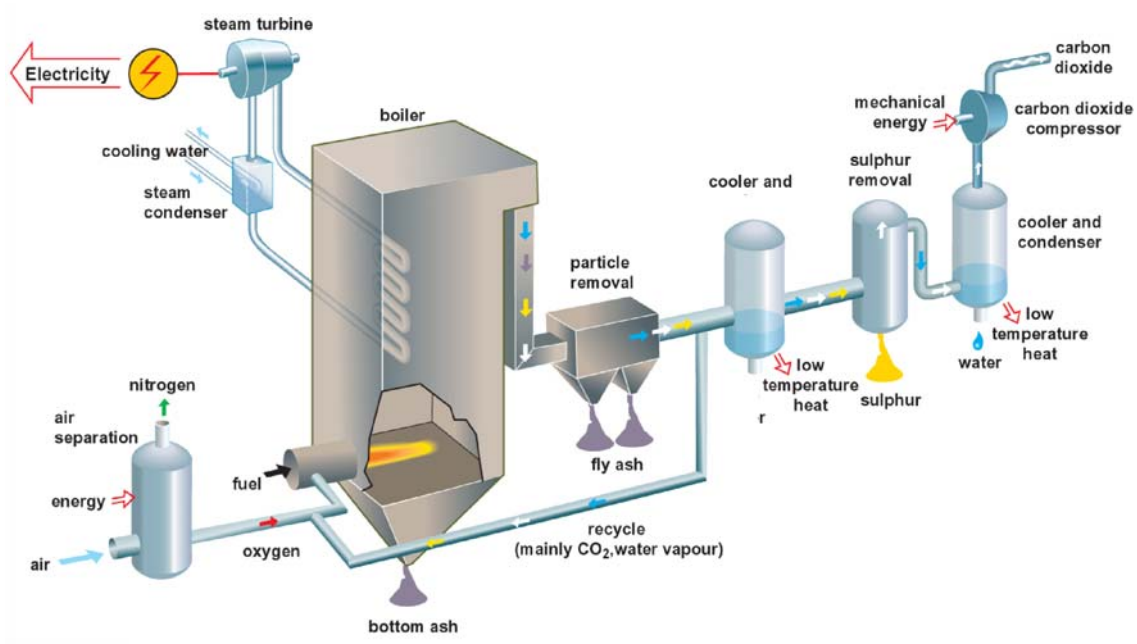

Figure 2.2: Schematic of Vattenfall's Oxyfuel Demonstration Pilot Plant

2.3 Concluding Remarks

Oxyfuel combustion is one of the promising clean coal technologies being developed by the power industry. Firing coal with pure oxygen plus recycled flue gas (which is mainly CO_2) produces a product flue gas, which is highly CO_2-concentrated. This product flue gas can be simply dried and compressed for sequestration, leading to a near zero emissions power plant, or further processed into a high purity CO_2 product for various uses, such as enhanced oil recovery (EOR) or enhanced gas recovery (EGR).

Results by ALSTOM and others indicate that this is an attractive option for coal combustion, because:

- It uses proven and reliable commercially available pulverized coal (PC) or circulating fluidized bed (CFB) boiler technology
- It uses commercially available CO_2 capture enabling technologies:
  - Oxygen production by cryogenic air separation
  - CO_2 purification, compression, and liquefaction
- There appear to be no show-stoppers in terms of:
  - Furnace operation
  - Heat transfer
  - Emissions of major gas species and trace elements

The development of this technology has proceeded to a level where it is now ready for large scale demonstration, after which commercial offerings would be possible.

3 PILOT SCALE TEST RESULTS AND DATA ANALYSIS

The objective of the pilot-scale testing was to generate detailed technical data needed to establish advanced CFB design requirements and performance when firing coal and delayed petroleum coke in O_2/CO_2 mixtures. Pilot-scale testing was performed at ALSTOM's Multi-use Test Facility (MTF), located in Windsor, Connecticut.

Results from the test data analysis will be available for the design of systems to retrofit existing CFB units for oxygen firing and for the design of new oxygen-fired CFB boilers. Test data analysis results were also used in this project for the plant retrofit task. The results of the retrofit task are discussed in Section 4 of this report where the retrofit design, performance calculations, costs and economic impacts are shown for Case 2 (CFB retrofit to O_2-firing with CO_2 Capture, Purification, Compression, and Liquefaction).

3.1 Background and Objectives

A major task of the Phase II program was to conduct a pilot plant test in ALSTOM's 3.0 MW_{th} (9.9 MMBtu/hr) pilot plant. The objective of the pilot testing was to simulate an oxygen-fired commercial plant and demonstrate successful operation. The testing also generated data on the following aspects of oxygen-fired combustion.

- Flue Gas Quality
- Bed Dynamics
- Heat Transfer (Waterwalls, Convection Pass Sections, Bubbling Bed Sections, and Moving Bed Sections)
- Flue Gas Desulfurization
- NO_x Emissions Reduction
- Other Pollutants' Emissions (N_2O, CO, VOC, Hg, and other trace elements)
- Bed and Ash Characteristics (e.g., Potential Bed Agglomeration)

This information was used for the retrofit design study of commercial sized units

3.1.1 MTF Pilot Tests Conducted in Year 2004

Phase II workscope consisted of pilot-scale testing followed by a refined performance and economic evaluation of the oxygen-fired CFB concept. As a part of this workscope, ALSTOM modified its 3.0 MWth (9.9 MMBtu/hr) Multiuse Test Facility (MTF) pilot plant to operate with O_2/CO_2 mixtures of up to 70 % O_2 by volume. Tests with coal and petroleum coke were conducted in two phases totaling approximately two hundred (200) hours. The test objectives were to determine the impacts of oxygen firing on heat transfer, bed dynamics, potential agglomeration, and major gaseous (NOx, N_2O, SO_2, and CO) and particulate emissions. The test data was used to refine the design, performance, costs, and economic models developed in Phase-I for an O_2-fired CFB with CO_2 capture (Case-2).

While carrying out the Phase II workscope, ALSTOM identified several items needing investigation in preparation for large-scale demonstration of the oxygen-fired CFB

concept. They consisted of additional MTF pilot testing and a subsequent retrofit design study of oxygen firing and CO_2 capture on a relatively small existing air-fired CFB plant. Hence, ALSTOM responded to a DOE Solicitation to address the identified technical gaps. ALSTOM received a contract award from the DOE to conduct a project entitled "Commercialization Development of Oxygen Fired CFB for Greenhouse Gas Control," under Cooperative Agreement DE-FC26-04NT42205, as briefly described in the following section.

3.1.2 Objectives of the 2005 MTF Pilot Tests

The specifically targeted objectives for testing the oxygen-fired CFB concept the MTF included:

- Back-end sulfur capture. That is, demonstration of SO_2 polishing, specifically ALSTOM's Flash Dryer Absorber (FDA) process for reducing SO_2 emissions from the flue gas, which is concentrated to high CO_2, H_2O, and SO_2 levels due to oxygen firing (i.e., no nitrogen dilution);
- Demonstration of the suitability and performance of a Moving Bed Heat Exchanger in place of a Fluidized Bed Heat Exchanger.
- Determination of the effect of combustion staging and ammonia injection on NO_x emissions reduction
- Assessment of volatile organic compounds (VOC's), mercury, and other trace elements emission potentials
- Determination of back-pass convection section heat transfer performance

These issues are briefly discussed in the following sub-sections.

3.1.3 Backend Sulfur Capture

One of the major benefits of fluidized bed combustion is the ability to capture SO_2 from the flue gas by the addition of limestone to the combustor. The sulfur capture occurs in two steps:

1. The calcium carbonate in the limestone is calcined to calcium oxide.
   Calcination: $CaCO_3 + \text{heat} \rightarrow CaO + CO_2$ [1]

2. The calcium oxide reacts with SO_2 to form calcium sulfate.
   Sulfation: $CaO + SO_2 + 1/2\ O_2 \rightarrow CaSO_4$ [2]

Calcination occurs when the limestone is heated to above the calcination temperature, which depends on the CO_2 content of the surrounding gas - see Figure 3.1.

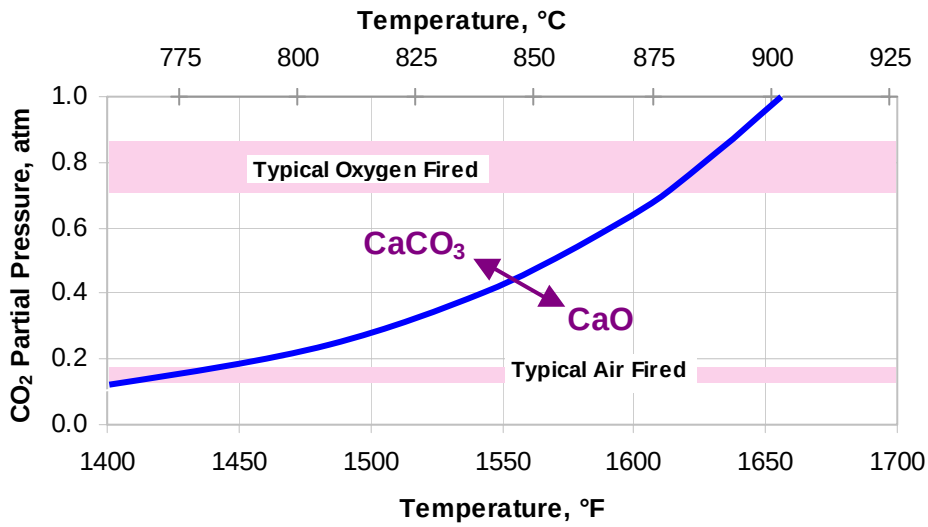

Figure 3.1: Equilibrium Temperature for Calcination

With air firing, the CO_2 content of the flue gas is under 20%. Limestone will calcine at about 760 °C (1400 °F), which is well below the typical CFB operating temperature of 815 to 900 °C (1500 to 1650°F).

With oxygen firing, however, the CO_2 content is above 70%. This requires a temperature above 885 °C (1625 °F) for calcination to occur. There are two consequences of this:

1. The combustor needs to operate at a high temperature to ensure calcination. This can generally be designed for - anthracites and petroleum cokes are typically combusted at above 885 °C (1,625 °F) in CFB combustors. For some fuels, there may be concerns for ash fusion and sulfur capture in the furnace may suffer at high temperature, as shown previously (Nsakala, et al. 2004)
2. Where the ash cools to below the calcination temperature while exposed to the high CO_2 content, recarbonation (the reverse of calcination) may occur.

Recarbonation: $CaO + CO_2 \rightarrow CaCO_3 + heat$ [3]

Recarbonation is a concern in those locations where the temperature drops below the calcination temperature: fluidized bed or moving bed heat exchanger and the convective pass.

Table 3.1: Typical Flue Gas Composition - Air *vs.* Oxygen Fired

Constituent	Air	**A.** 30% O_2/Recycled Flue Gas (Retrofit Scenario)	**B.** 70% O_2/Recycled Flue Gas (Greenfield Scenario)
N_2 (%)	74.78	0.81	0.74
CO_2 (%)	14.49	82.78	74.91
H_2O (%)	7.40	13.05	20.97
O_2 (%)	3.31	3.31	3.31
SO_2, ppmv	199	469	764

Hence, two options were evaluated during the test campaign for dealing with the issues of sulfur capture and recarbonation:

1. *Backend Sulfur Capture with FDA/Lime.* This test entailed using a sand bed instead of injecting limestone in the furnace, and injecting commercially prepared lime (CaO) into the FDA to capture SO_2. Testing was conducted while firing the medium volatile bituminous coal in both air and O_2/CO_2 mixture (Case A in Table 3-1). This scenario implies that in commercial operation, the FBHE can be fluidized with recycled flue gas (mainly CO_2) without the danger of recarbonation.
2. *Limestone Injection in the Furnace with a Backend Polishing System (FDA).* This test entailed using the FDA in a classical manner. That is, limestone was fed to the furnace, and the FDA was used as a secondary SO_2 polishing system. Testing was also conducted while firing the medium volatile bituminous coal in both air and O_2/CO_2 mixture (Case A in Table 3.1). This scenario implies that in commercial operation, the FBHE should be fluidized with air or inert gas (e.g., N_2 from the ASU) in order to avoid recarbonation. Under this scenario, the fluidizing gas would have to be vented off into a heat recovery system before it is exhausted to the atmosphere.

3.1.4 MBHE Demonstration

The MBHE, which was demonstrated in this testing, is located in a parallel solids stream with the fluid bed heat exchanger (FBHE), as shown in Figure 3.3. This device was tested while firing the medium volatile bituminous coal in air and in an O_2/CO_2 mixture (Case A in Table 3.1) and petcoke in the same O_2/CO_2 mixture.

The moving bed external heat exchanger design provides several advantages over a bubbling fluidized bed. One significant advantage of the moving bed is that a higher temperature differential is obtained between the bed material and the steam cycle working fluid. This reduces the surface area and weight requirements for the heat exchanger pressure parts. The higher temperature differential occurs because the moving bed can be designed as a counterflow heat exchanger. The bubbling fluid bed on the other hand is more of a “stirred” heat exchanger where the bed material is at a “stirred temperature”. The “stirred temperature” is much lower than the inlet solids temperature in the moving bed. Additionally, the moving bed does not require any fluidizing medium, fluidizing blower, fluidizing nozzles, and fluidizing gas piping thus providing a

much simpler system. With these advantages, the moving bed allows for a much more compact and less expensive design than a bubbling bed design.

The savings of MBHE design are further magnified for O_2 firing due to the greater external heat exchanger duty. Figure 3.2 shows the distribution of the heat duty between the combustor, convective pass, and external heat exchanger when firing coal in air and an O_2/CO_2 medium (Nsakala, Liljedahl, and Turek, 2004).

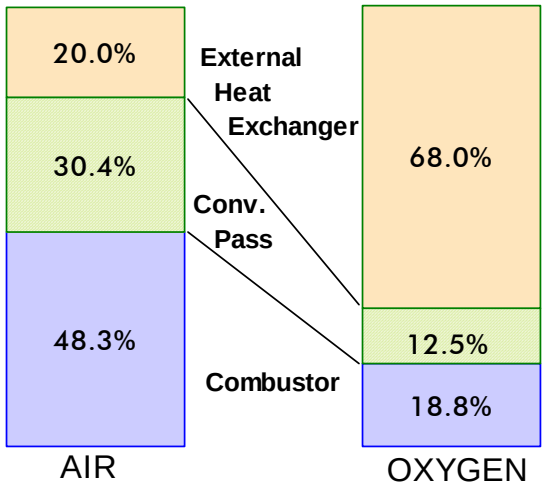

Figure 3.2: Boiler Heat Absorption Comparison – Air and 70% O_2 Firing

The ability of the MBHE to operate without fluidizing media is very significant for O_2 firing, as the potential for recarbonation is avoided altogether.

3.1.5 NO_x Emissions

NO_x emissions with oxygen firing are lower than with air firing due to the elimination of nitrogen from the air. This was the case in the 2004 pilot testing. In the 2005 tests, ammonia was injected to investigate the potential for further reduction by selective non-catalytic reduction (SNCR).

3.1.6 Mercury and Trace Elements Analysis

Mercury and other trace elements were not reported in previous studies. The present study addressed this issue.

3.1.7 Convective Pass Fouling and Heat Transfer

In a conventional CFB, the flue gas leaving the cyclone is cooled in the convective pass followed by an air preheater. In the convective pass, fly ash typically deposits on the tube banks. If necessary, steam soot blowers periodically clean the tubes. As the gas cools to below about 760 °C (1400°F) (see Figure 3.1), there is the potential for CO_2 in the flue gas to recombine with calcium oxide in the deposits to form calcium carbonate (per Eq. 3 above). This can increase the hardness of the deposits, making them difficult to remove. With oxygen firing, the CO_2 content is higher, so the recarbonation occurs in a broader temperature range and at a higher rate.

Two convective tubes were installed downstream of the MTF cyclone (Figure 3.3) to

investigate the effect of oxygen firing on both tube fouling and heart transfer

3.2 MTF Pilot Plant

ALSTOM Power Inc.'s "Multi-Use Combustion Test Facility" (MTF) was developed by its US Power Plant Laboratories to support the Power Generation Businesses strategic development needs. This facility (Figure 3.3) provides the flexibility to perform pilot-scale testing with conventional pulverized-coal firing, fluidized bed combustion, and gasification firing conditions. The test facility is located in ALSTOM Power Inc.'s Combustion Research Complex at its US Power Plant Laboratories facilities in Windsor, Connecticut, USA.

The MTF also allows testing with both circulating and bubbling fluidized bed conditions, as well as various other conditions being considered for advanced processes. Capabilities for testing under FBC modes provide detailed data on heat transfer, hydrodynamics, combustion, sulfur capture and process control.

Investigations can be conducted with test fuels including coal, oil, and gas as well as various alternative fuels such as petroleum coke and biomass. Complete solid fuel and sorbent handling systems, a flue gas scrubbing system and a Fabric Filter Test Facility are also incorporated into the MTF.

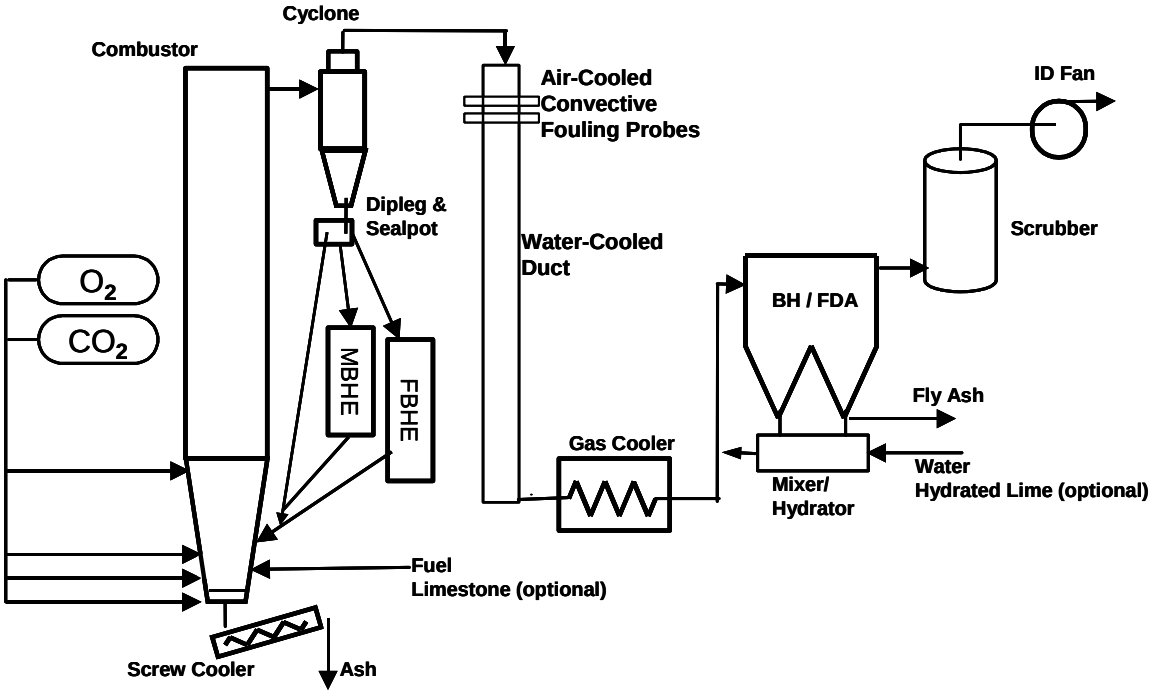

Figure 3.3: Schematic of the Multi-use Test Facility (MFT)

3.2.1 General Facility Description

This section gives a description on the MTF in its basic CFB configuration. The modifications made for the oxygen-fired testing are also described in this section

The MTF can be operated under atmospheric conditions at firing capacities up to 3.0 MW_{th} (9.9 million Btu per hour). The combustor has an overall height of more than 18 m

(60 feet m). The inside diameter is 1 m (40 inches) in the upper furnace; in the bottom nine feet it tapers to 0.66 m (26 inches) diameter. The area of the fluidizing grid is 42% of the upper furnace area ($26^2/40^2$x100). The furnace is equipped with extensive instrumentation and control systems and is housed in an enclosed building with supporting ancillary equipment.

Combustion air is supplied through a Spencer forced draft fan. The combustion air stream is split into underbed and overfire air streams. The underbed air passes through an electric heater, where it can be preheated up to 540°C (1000 °F). The underbed air then enters a plenum, before passing through the air distributor.

Overfire air is injected into the furnace at one or more locations. A large number of ports are available for evaluating the effect of overfire air location. The overfire air is connected to the combustor ports with high temperature flexible tubing, which makes the relocation of overfire air locations a rapid and easy process.

The combustor is made of several modular sections. The upper combustor sections are lined with 254-mm (10-inch) thick refractory. This refractory liner consists of a composite of three layers: 102-mm (4-inch) of refractory brick on the interior surface followed by 102 mm (4 inches) of low density insulating refractory and 51 mm (2 inches) of mineral wool board against the facility housing.

At two elevations along the combustor, there are 305 mm (1 foot) wide by 1,730 mm (68 inches) tall openings to accommodate water-wall test sections for heat transfer measurements. When the water-wall panels are not used, the openings are fitted with flat water-cooled panels with a thin refractory covering.

Additional heat transfer surface can also be installed in the upper furnace if desired - e.g., horizontal tube bundles or vertical wing walls.

The hot combustion gases and solids exit the top of the combustor and enter a refractory-lined cyclone, where the circulating solids are separated from the hot gases. The separated solids drop through a dipleg into a sealpot. The dipleg can be water-cooled, steam cooled, or uncooled. When the dipleg is cooled, the solids recirculation rate through the combustor can be estimated from a heat balance across the dipleg. The hot solids in the sealpot either return directly to the combustor through an insulated stainless steel solids return pipe, or a portion of the solids may be diverted to one of two water-cooled heat exchangers before returning back to the combustor. The main heat exchanger is a fluid bed heat exchanger, similar to that used in current commercial designs. The second heat exchanger has at different times been configured as a fluid bed heat exchanger, a moving bed heat exchanger, and a falling solids heat exchanger. The heat exchangers are used to cool the recirculating solids and thus control the combustor bed temperature. They provide the test facility with a great deal of flexibility in operating the combustor over a wide range of process conditions.

Circulating ash can be drained from the FBHE into 55-gallon drums as needed to help control furnace inventory. This ash can be added back into the furnace if necessary to increase inventory. Otherwise it may be saved as startup material for future tests.

The hot flue gas leaving the cyclone flows through a water-cooled heat exchanger. The cooled gases then flows though a fabric filter and a wet caustic scrubber for final SO_2 and

particulate control. The baghouse can be bypassed if desired - e.g., during warm-up. The induced draft fan and the stack follow the wet scrubber.

The baghouse has been modified into a Flash Dry Absorber (FDA) test system. The FDA system is a dry process based on the reaction between SO_2 and $Ca(OH)_2$ in humid conditions. Additional equipment for the FDA test system include a FDA mixer/hydrator, additive feed system, FDA reaction duct, modification of the flue gas ducting, and additional gas analyzers, instrumentation, and controls systems. The fly ash collected in the baghouse is discharged through a screw into 55-gallon drums, which are weighed then saved or disposed of as required.

The combustor is warmed up with a natural gas igniter, which is sized for a maximum heat input of 3.0 MW_{th} (9.9 million Btu/hour). The igniter is located 1,372 mm (4.5 feet) above the air distributor, with the flame directed downward toward the bed at a 55° angle. Crushed coal and sized limestone are supplied to the combustor through the fuel feed system. Coal and limestone are metered from the storage silos by gravimetric feeders and are then lifted up to the feed inlet chute by a drag chain conveyor. The fuel and sorbent drop through a rotary valve either directly into the furnace at one of two elevations or into the return pipe that carries the hot recycle solids back to the fluidized bed.

A drain port is located on the opposite side of the bed for removing large rocks and for maintaining bed level. The hot ash removed in the bed drain system passes through a water-cooled screw into 55-gallon drums, which are weighed then saved or disposed of.

The Multi-Use Combustion Test Facility uses an ABB Advant 460 distributed control system for the process control and data acquisition needs of this facility, and for the other major combustion facilities in the Combustion System Development Complex. The MTF is very well instrumented, with over 500 temperature, pressure, and flow measurements throughout the facility.

Figure 3.4 is a simplified Process and Instrumentation Diagram (P&ID) for the main furnace system as set up for the oxygen-fired tests in 2004. The only significant differences between

Figure 3.4 and how the MTF was set up for these tests in 2005 are (1) the cooling coil shown at the top of the furnace was not installed and (2) the MBHE (not shown) was used in parallel with the FBHE as shown in Figure 3.3.

A LabView data acquisition system is used to collect these measurements and process calculations from the Advant system. The LabView program provides on-line trend analysis, data archival, and data analysis.

Ports are located at 16 different elevations along the height and around the circumference of the combustor. They provide a great deal of flexibility for detailed in-furnace measurements, overfire air location, and observation ports. Test probes are used to measure process conditions both radially and axially within the furnace. Typical test measurements across the combustor profile can include solids loading and composition,

local solid fluxes, gas composition and temperature, and local heat flux. The gas analysis system allows measurement of important species, including O_2, CO, CO_2, SO_2, NO_x, N_2O, and THC (total hydrocarbons). Gas samples can also be collected for more detailed species analysis in a gas chromatograph

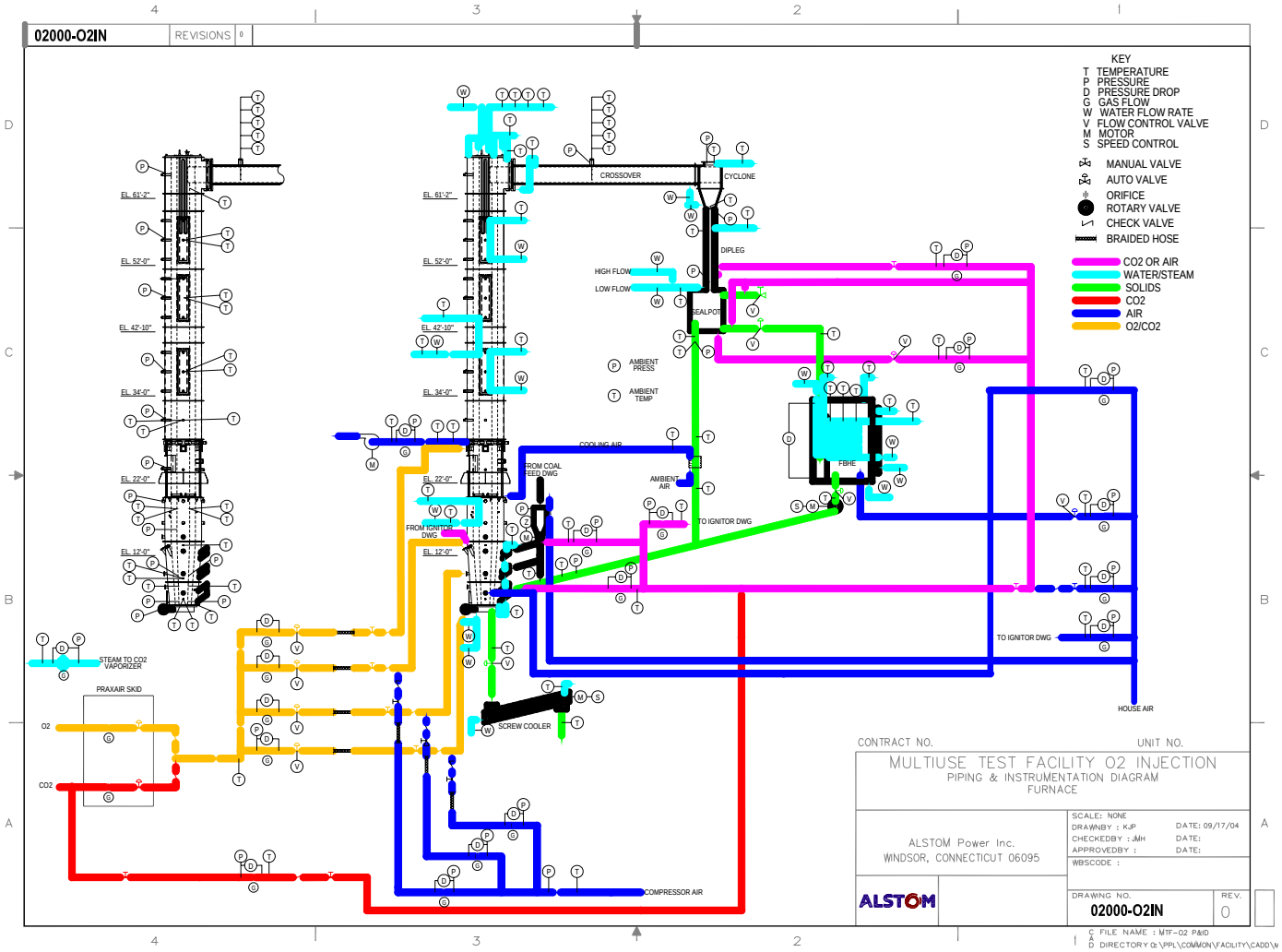

Figure 3.4: MTF Process & Instrumentation Diagram

Logged Data

Hundreds of data points are monitored and logged by the Advant and LabView systems.

- Over 150 Type-K thermocouples are installed on the MTF to measure air, flue gas, water, combustor, and refractory temperatures.
- Over 40 pressure cells are installed on the furnace and gas ducts.
- Water flows are measured with turbine flow meters.
- Coal and limestone belt feeder rates are logged. These feeders are calibrated before each test and may be checked periodically during each test by collecting material off the belt for ½ to 2 minutes.
- Additional pressure differential cells are used (along with pressure and temperature) to calculate air, natural gas, and steam flows.
- An in-situ Rosemount O_2 analyzer, located downstream of the heat exchanger, measures the wet oxygen content of the flue gas.
- At the same point, a gas sample is extracted, filtered, drawn through a heated sample line to the control room, and dried. Analyzers measure O_2, CO_2, CO, NO, NO_2, N_2O, NO_x, total hydrocarbons (THC), and SO_2. The analyzers usually operate continuously with purges every hour or so as the filter pressure drop increases. The analyzers are calibrated twice per day.
- The gas analyzers in the control room can be switched over to analyze in-furnace gas samples, which are extracted and filtered using a water-cooled gas-sampling probe.
- After the baghouse, a gas sample is extracted, filtered, drawn through a heated sample line to a control room, and dried. Analyzers measure O_2, CO_2, CO, NO_x, and SO_2. The analyzers usually operate continuously with purges every hour or so as the filter pressure drop increases. The analyzers are calibrated twice per day.
- Waterwall panels or single tubes can be installed in the furnace to obtain heat transfer data. Two single-tube test sections were installed for this test.
- Water-cooled heat transfer probes can be used for measuring local total and radiation heat flux throughout the furnace. This data is not logged to the normal data system. These probes were not used in these tests.

Solids Samples

Solids samples are taken at several locations.

- Coal and limestone samples are taken off the feed belts periodically and mixed together for a composite each 8 or 12-hour shift.
- Bed drain material from the water-cooled screw outlet is regularly sampled.
- FBHE drain material is usually taken for analysis of the circulating material. There are also ports in the heat exchanger box for directly withdrawing samples.

- Samples of fly ash are collected from the baghouse drain.
- There are several water-cooled solids probes for collecting samples from the furnace. These probes can also measure the local solids flux. There were no in-furnace solids samples taken during these tests.
- Crossover solids at the cyclone inlet are sampled at the calculated average isokinetic conditions with the water-cooled solids probe to determine the rate of solids circulation and the size distribution of the solids entering the cyclone. This sampling can be done at different locations horizontally and vertically across the cyclone inlet. The solid loading is higher at the top and lower at the bottom of the duct. The profile is roughly linear so a single sample at the midpoint can be used to estimate the solids loading.
- Isokinetic dust load can be measured according to EPA Method 5 in the down flow water-cooled duct after the cyclone. No Method 5 sampling was done during these tests by ALSTOM; TRC Environmental Corporation (TRC) did Method 5 sampling of particulate as described below.
- A High Volume technique is used to collect a larger fly ash sample at the calculated average isokinetic conditions of the duct at 4 points along one axis. The original purpose of this method was to get a reasonably unbiased sample for size and composition analysis. It turns out that the measured dust load is often quite accurate and compares favorably with Method 5 measurements.

Selected solids samples are analyzed as required. Samples not analyzed are retained for future use as needed.

Additional Sampling for these MTF Tests

- TRC sampled at the cyclone outlet and the baghouse inlet at three test conditions - EPA Method 5 for particulate and EPA Method 29 for metals.

3.2.2 Facility Modification for Oxygen Firing

The O_2/CO_2 supply and control infrastructure and other modifications made to the MTF furnace and ancillary equipment are discussed below.

Oxygen and Carbon Dioxide Supply Infrastructure. In the commercial design for oxygen-fired boilers, pure oxygen is delivered to the plant and is mixed with recirculated dried flue gas in order to achieve the desired oxygen content of the net oxidant. For the pilot plant testing, mixtures of oxygen and pure carbon dioxide were used, with each supplied by purchased liquefied gases. This approach is more cost effective for the short term testing and allows additional flexibility of control not afforded by recirculating flue gas.

An O_2/CO_2 supply and control infrastructure, designed and supplied by Praxair, Inc. was integrated into the MTF facility to enable the combustion of fuels in various O_2/CO_2 mixtures (Figure 3.5). An oil-fired steam boiler was rented to supply steam to the CO_2 vaporizer.

Discussion of Global and Local O_2 Enrichments.

Oxygen and carbon dioxide are blended to simulate the mixture of pure oxygen and recirculated flue gas used for the oxidant in the combustor. In addition, some pure CO_2 bypasses the mixing skid to be used for various purposes where high oxygen mixtures were not desired, e. g.,

- coal assist "air"
- igniter cooling "air"

There is also air introduced into the system through leakage as well as air used to fluidize the sealpot. Figure 3.6 indicates the various flows.

As a result, there are several definitions of the oxygen content of the oxidant.

Global O_2 - The concentration of O_2 in the overall O_2/CO_2 mixture from the tanks, which includes the bypass CO_2. There is no actual gas mixture at this concentration. This mixture represents the overall ratio of O_2 and CO_2 entering the system and is used for normalizing the emissions, and other analyses.

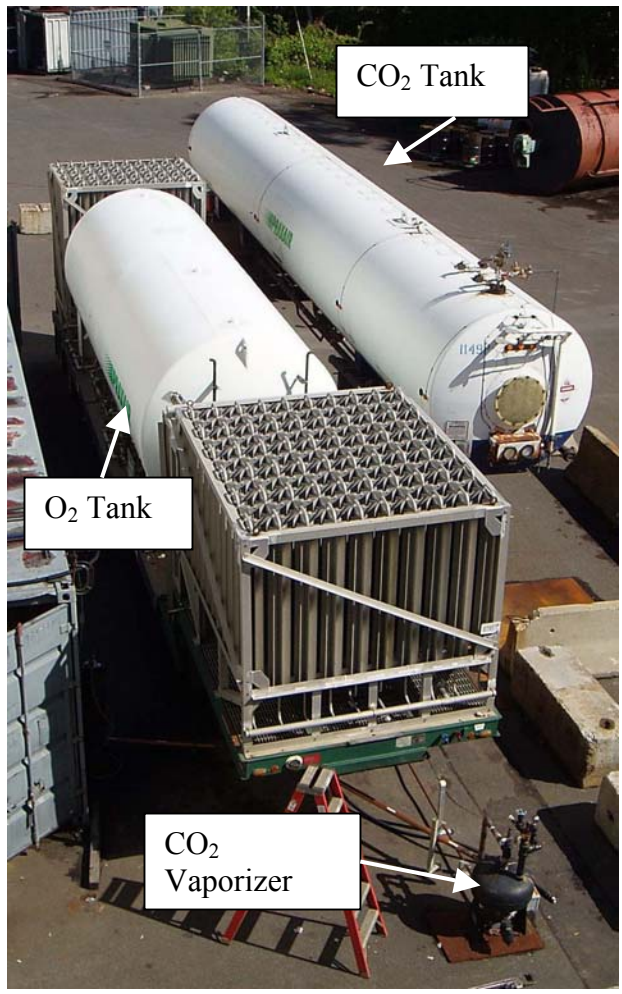

Figure 3.5: O_2 and CO_2 Supply Tanks

Local O_2 - The actual combustion mixture of O_2/CO_2 as it comes from the mixing skid. This has a higher O_2 content than the global mixture. This is the oxidant mixture which enters at the bottom of the furnace and first sees the coal in the fluid bed. This is the relevant mixture for materials of construction of the fluidizing nozzles and for concerns regarding high oxygen concentrations resulting in elevated combustion temperatures at the coal surface, which might lead to agglomeration.

Overall O_2 - The oxygen concentration of the overall oxidant, including the air leakage. This value is not used much in the analysis of the results.

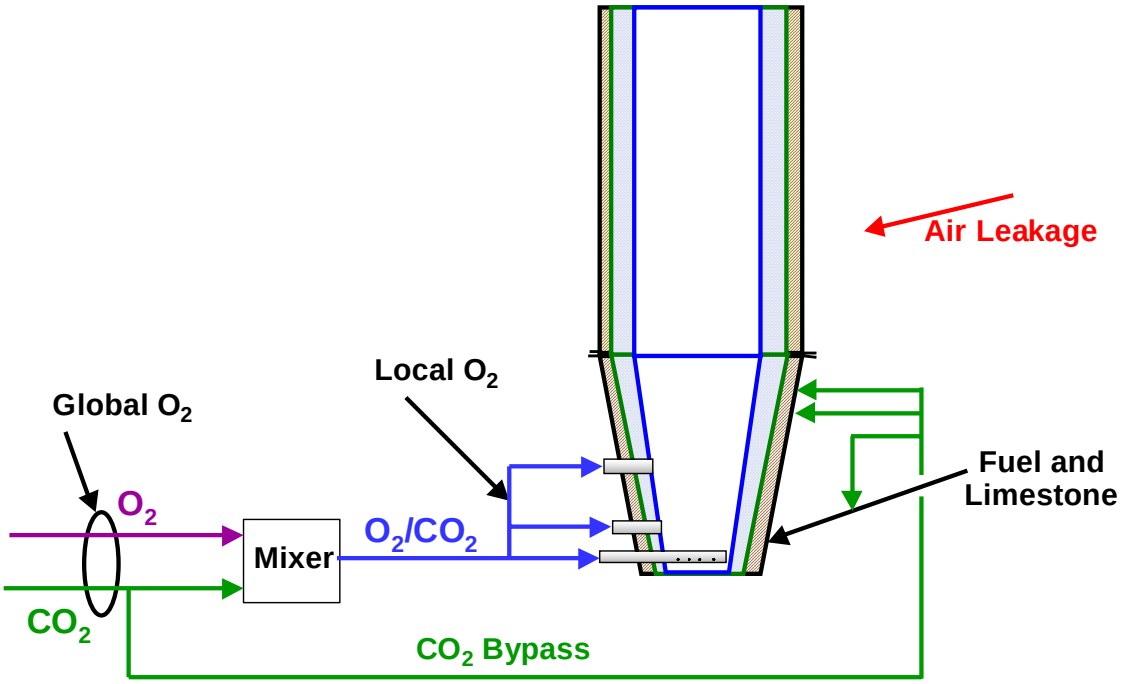

Figure 3.6: Schematic of Oxygen and Carbon Dioxide Flows to the MTF

The same definitions can apply to a commercial unit, which would use recirculated flue gas in place of the pure CO_2. Because of the small scale of the pilot plant, the bypass CO_2 requirements and the amount of air leakage are relatively large, so the differences between the three mixture definitions are larger than they would be in a full-scale commercial unit.

Venting of the FBHE

In order to avoid recarbonation, the MTF's fluidized bed heat exchanger (FBHE) was fluidized with air. The FBHE was modified as shown in Figure 3.7 such that the fluidizing air was vented off to the I.D. Fan. In this manner, the cooled solids could be recirculated into the furnace with only a small entrainment of air.

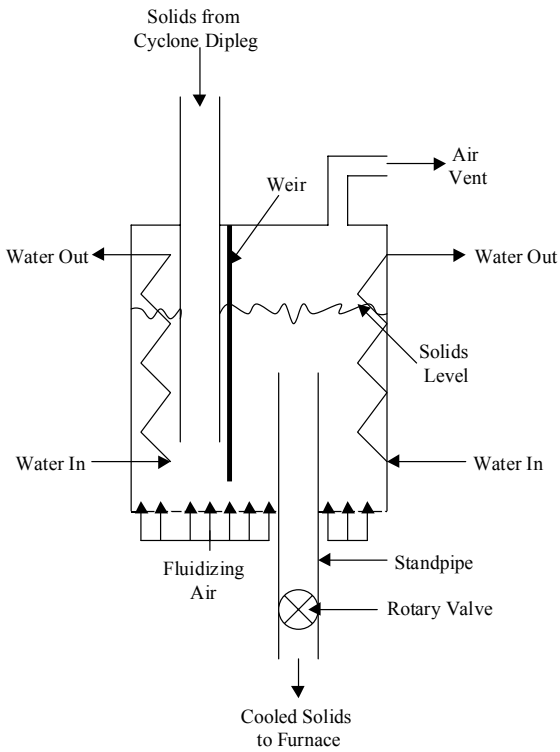

Figure 3.7: Modified Fluidized Bed Heat Exchanger Showing Air Vent

Instrumentation and Control System

The materials and instrumentation for the oxygen supply and distribution were specified for service in high oxygen environment. Most of the existing instrumentation on the facility was suitable for the oxygen testing, since the combustion reduces the oxygen content in the furnace to the typical range of 3 - 4%.

A furnace of this size burning gas and coal - even with air - does have some risks. The control system has been programmed to handle such situations as loss of fuel and temperature or pressure excursions.

With oxygen firing, there is the additional concern of avoiding high O_2 concentrations where they aren't wanted. If the fuel trips or plugs while firing high oxygen mixture, the furnace and backend systems would see the high O_2 levels. If the CO_2 supply should stop, pure oxygen would enter the furnace, which would be highly undesirable.

The MTF control system logic was modified to detect and respond to these situations.

3.2.3 Differences Between 2004 and 2005 Pilot Plant Modifications

Reduced Furnace Diameter.

For the 2004 MTF tests, the diameter of the upper furnace was reduced from 1 m (40 inches) to 530 mm (21 inches) by adding a refractory liner. The liner reduced the diameter at the bottom of the furnace from 660 mm (26 inches) to 360 mm (14 inches). This was done to maintain a high fluidizing velocity in the furnace even at global oxygen enrichments of up to 70% while keeping the firing rate below the MTF's operating permit level of 3.0 MW_{th} (9.9 MMBtu/hr). After last year's tests, the refractory liner was removed.

For this 2005 test series, no liner was used. In the air-fired tests, the firing rate and velocities were as they normally are. For the oxygen-fired tests, the global O_2 content was 30%, which resulted in lower velocities in the furnace (see Figure 3.8).

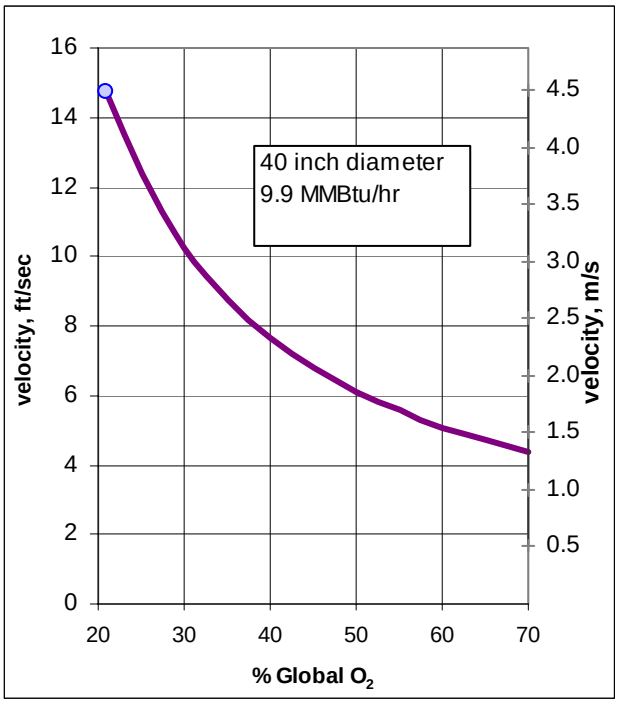

Figure 3.8: Fluidizing Velocity *vs.* O_2 Enrichment

Grid Plate

With the reduced furnace diameter in 2004, the normal grid plate was replaced with a smaller design using spargers for air/oxidant at the furnace bottom. In 2005 tests, a normal, full-size grid plate with fluidizing nozzles was used (shown in Figure 3.9).

Air Firing

In 2004, compressed air was used for the air fired test conditions. In 2005, because of the higher firing rate on air and the lower pressure drop through the nozzles, the normal forced draft fan was used.

Cyclone

The water-cooled cyclone and inlet duct used in 2004 were replaced with uncooled sections. There is now (in 2005) less of a temperature drop for solids and gas through the cyclone.

Sealpot

To avoid unnecessary air leakage, it is desirable to fluidize the sealpot with CO_2. But in the pilot plant, the sealpot temperature can be below the recarbonation temperature, so in 2004 the sealpot was re-plumbed to allow fluidization with CO_2, air, or a mixture of the two. In 2005, the sealpot was simply fluidized with air.

Figure 3.9: Water-Cooled Gridplate

3.2.4 Differences Between Pilot Plant and Commercial Unit

The MTF pilot plant is a good model of a commercial CFB boiler - it comprises most of the components of the commercial system and is large enough to simulate the process without gross distortions due to scale. There are, however, several differences, which must be kept in mind when evaluating the test results.

The most obvious is the difference in scale, especially the smaller cross sectional area.

This has several impacts. One is that everything is much more uniform across the cross section. The MTF has an inner diameter of 1.0 m (40 inches). A large commercial unit may, for example, have dimensions of 7.6m x 24m (25' x 80'). Even smaller commercial units have shown strong maldistributions: for example, a plume of nearly zero oxygen may extend up the entire furnace height above the fuel feed locations, while at the opposite wall the oxygen content may be 10%. We have seen maldistributions in the MTF, but they are much less severe and do not extend the whole height of the unit. As a consequence, pilot plants in general have lower CO and SO_2 emissions, which benefit from improved mixing. On the other hand, NO_x emissions tend to be higher in a pilot plant, since the better mixing reduces the beneficial effect of horizontally staged combustion.

Another consequence of the reduced scale is the much greater surface-to-volume ratio in the pilot plant. If the pilot furnace were of waterwall construction, the heat removal would be much too large to sustain coal combustion conditions. The pilot plant is refractory lined with the possibility for some heat transfer sections along the height of the furnace. The heat removal profile along the height is therefore different. The large internal refluxing of solids along the height of the furnace does tend to smooth out the temperature profile, but it is not perfectly uniform in either the pilot or commercial units.

A typical commercial unit has a furnace height of over 30 m (100 ft) while the MTF furnace is about 19 m (62 ft) tall. This affects the gas residence time in the furnace. This impact is somewhat lessened by the fact that the furnace operates with a superficial velocity slightly lower than current commercial designs ~ 4.5 vs. 5.5 m/s (15 ft/sec vs. 18 ft/sec) or higher.

There are other features of the small-scale pilot that may matter. For example, as a practical matter, the sealpot is proportionally large compared to the scale of the furnace, so the fluidizing airflow to the seal pot is relatively large.

The dipleg can operate water-cooled, steam cooled, or uncooled. This cooling of the dipleg reduces the temperature of the solids in the sealpot, possibly to below the recarbonation temperature. This was especially relevant to this oxygen fired test program, since the sealpot operated below the calcination temperature. In 2004, the sealpot could not operate with CO_2 fluidizing only (the calcium oxide in the ash reacted with the CO_2 to form $CaCO_3$, leaving no fluidizing gas). For these tests, the sealpot was fluidized with air, which introduced additional air leakage into the system.

Another difference relevant to the oxygen-fired tests was the use of pure CO_2 for mixing with the oxygen, rather than recirculated flue gas. Table 3.2 shows an example of the differences in flue gas composition leaving the combustor between firing with pure O_2/CO_2 mixtures and with recirculated flue gas (FGR).

When firing with recirculated flue gas, sulfur and moisture are returned back to the combustor resulting in higher concentrations in the flue gas (recirculation loop). The consequence of using pure CO_2 is a higher CO_2 content in the flue gas with other components somewhat lowered. Compared to the major difference in gas composition going from air-fired to oxygen-fired, the changes due to using pure CO_2 were not considered significant for these tests.

Table 3.2: Flue Gas Recirculation *vs.* Pure CO_2

	Air Firing	30% Oxygen	
		FGR	Pure CO_2
N_2 (%)	74.78	0.81	0.22
CO_2 (%)	14.49	82.78	88.2
H_2O (%)	7.40	13.05	8.24
O_2 (%)	3.31	3.31	3.31
SO_2, ppmv	199	469	302
SO_2, dry	215	540	329

Based on Bituminous coal with 2.3%S fired to a constant excess oxygen
90% S Capture in Boiler, 80% in backend for 98% total capture
Flue Gas dried to 7% H_2O Before Flue Gas Recirculation

3.3 Fuels and Limestones

This section describes the fuels and limestones that were consumed during the MTF testing.

3.3.1 Fuels

One coal and one petroleum coke were burned in these tests. The coal is a medium volatile bituminous (mvb) coal obtained from Tri-Star Mining, Inc. This coal (referred to as Tri-Star coal) is a 50/50 weight % blend of Big Vein and Morantown coal seams from Garrett County in Maryland. The shot petroleum coke was acquired from ConocoPhillips VENCO plant in Moundsville, West Virginia. Tri-Star mvb coal and ConocoPhillips petcoke were sampled from the MTF belt feeder throughout the testing. The proximate and ultimate analyses and higher heating values along with the screen size distributions for selected fuel samples are given in Table 3.3. The analyses of the mvb coal and petcoke are consistent with the analyses obtained from the samples studied in 2004 (Nsakala, Liljedahl, and Turek, 2004). The fuel size distributions are plotted Figure 3.10.

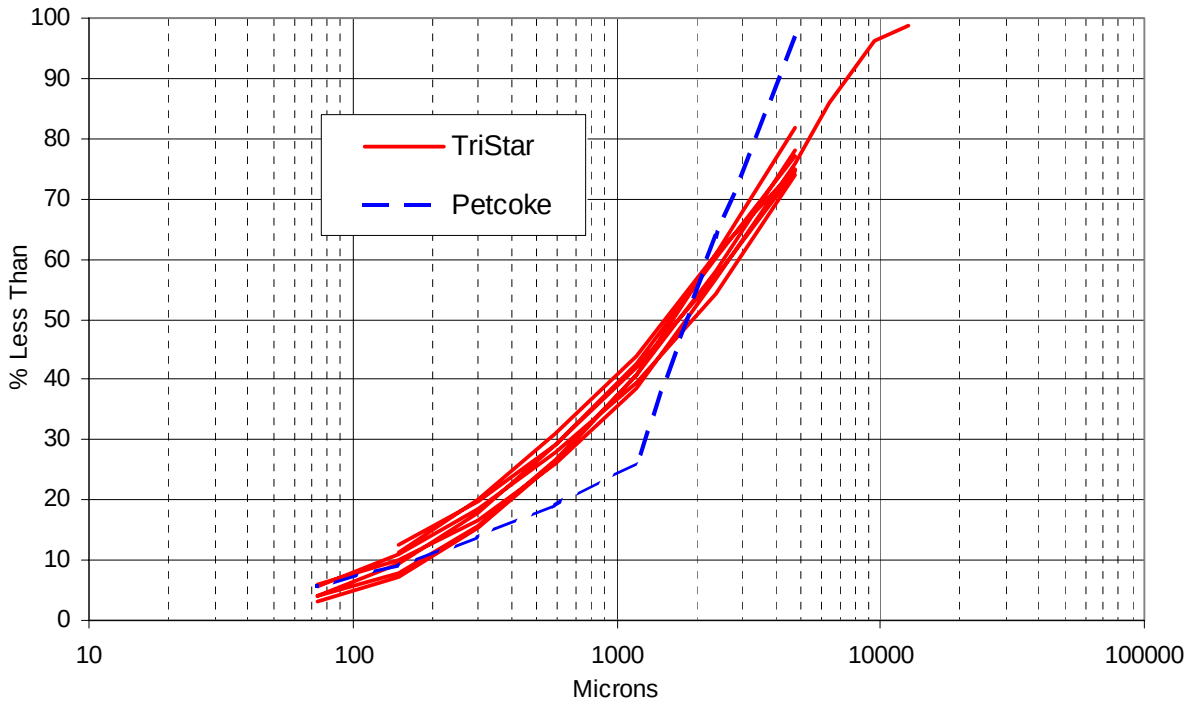

Figure 3.10: Fuel Size Distribution

Table 3.3: Analysis and Size Distribution of Fuel Samples

PPL Sample No.	5-2840-C	5-3059-C	5-3060-C	5-3061-C	5-3062-C	5-3063-C	5-3064-C	5-3065-C
Sample	TriStar Coal from Bunker	TriStar Coal from feeder	TriStar Coal from feeder	TriStar Coal from feeder	TriStar Coal from feeder	TriStar Coal from feeder	TriStar Coal from feeder	Petcoke from feeder
Sample Start	25-May-05	6/14/05 9:45	6/15/05 0:00	6/16/05 19:30	6/17/05 20:00	6/18/05 21:00	6/19/05 21:00	6/20/05 22:00
Sample End		6/15/05 0:00	6/16/05 19:30	6/17/05 20:00	6/18/05 21:00	6/19/05 21:00	6/20/05 22:00	-------
As-Received Basis								
% Total Moisture	6.46	3.00	4.18	3.74	4.72	4.93	4.34	2.40
% Volatile Matter	15.43	16.05	15.94	16.34	16.28	16.24	16.19	9.25
% Fixed Carbon	60.51	60.99	60.58	61.72	60.29	60.54	62.28	87.45
% Ash	17.60	19.96	19.31	18.20	18.71	18.30	17.19	0.91
HHV Btu/lb	11650	11814	11696	11992	11736	11800	12056	14749
HHV, MJ/kg	27.1	27.5	27.3	27.9	27.4	27.5	28.1	34.4
% Moisture	6.46	3.00	4.18	3.74	4.72	4.93	4.34	2.40
% Hydrogen	3.74	3.47	3.45	3.54	3.46	3.47	3.53	2.79
% Carbon	66.50	67.26	66.61	68.19	66.77	67.00	68.73	86.22
% Sulfur	2.07	2.12	2.16	2.09	2.14	2.19	2.27	5.31
% Nitrogen	1.47	1.50	1.49	1.50	1.51	1.48	1.52	1.67
% Oxygen (diff)	2.16	2.68	2.80	2.75	2.69	2.64	2.42	0.70
% Ash	17.60	19.96	19.31	18.20	18.71	18.30	17.19	0.91
% Total	100.00	100.00	100.00	100.00	100.00	100.00	100.00	100.00
% Cl (Dry basis)	0.005					0.008		0.040
Wppm Hg (Dry basis)						0.34		<0.02
% Retained on Screen								
12. 70 mm (1/2 inch)	1.20							
9.525 mm (3/8 inch)	2.52							
6.35 mm (1/4 inch)	10.43							
4.75 mm (4 mesh	9.89	25.26	25.17	26.05	22.79	22.00	18.04	3.54
2.36 mm (8 mesh)	19.14	17.84	14.04	19.81	17.07	20.00	21.05	32.94
1.18 mm (16 mesh)	18.12	14.96	16.86	14.56	17.48	17.29	20.02	37.63
600 µm (30 mesh)	12.70	12.73	12.88	11.83	13.58	14.23	14.15	6.73
300 µm (50 mesh)	9.39	9.46	11.14	9.28	11.16	11.01	11.00	5.50
150 µm (100 mesh)	6.69	7.22	8.61	7.62	8.58	8.25	7.81	4.55
75 µm (200 mesh)	3.96			5.34	5.33	4.03	3.74	3.45
Pan	5.96	12.53	11.30	5.51	4.01	3.19	4.19	5.66

The ash composition of the Tri-Star Coal and the metals content of the coal and pet coke are presented in Table 3.4.

Table 3.4: Fuel Ash and Metals Analyses

Coal Ash Composition weight % (as oxide) in ash	Coal 5-3063-C
SiO2	53.86
Al2O3	24.13
Fe2O3	11.44
CaO	2.26
MgO	0.86
Na2O	0.24
K2O	2.37
TiO2	1.18
P2O5	0.48
SO3	2.43
MnO	0.06
BaO	0.12
SrO	0.07
Total	99.50

Minor/Trace Elements weight ppm (as element) in dry coal)	Coal 5-3063-C	Pet Coke 5-3065-C
Arsenic	8.2	0.9
Barium	207	7.8
Beryllium	2.3	0.1
Cadmium	0.3	0.0
Chromium	32.3	4.4
Cobalt	7.4	1.1
Copper	12.4	3.1
Iron	15397	744
Lead	10.0	0.7
Manganese	56.2	7.1
Mercury	0.34	< 0.02
Molybdenum	6.8	36.7
Nickel	25.9	236
Strontium	114	5.1
Titanium	1361	32.8
Vanadium	53.6	653
Zinc	27.7	6.8

3.3.2 Sorbents

Three sorbents were used in the MTF tests:

Hydrated Lime A hydrated lime was fed directly to the FDA/baghouse for backend sulfur capture without limestone injection into the furnace. This is attractive because it avoids the recarbonation issues in the furnace and heat exchangers altogether.

ATF40 Limestones The ATF40 limestone, from Specialty Minerals in North Adams, MA, was fed into the furnace for combined furnace/FDA sulfur capture. This limestone was selected because it was conveniently available in a fine size, which was expected to circulate well in the combustor even at the reduced velocity of the O_2-fired test conditions. This limestone has very low sulfation reactivity; lower even than Chemstone, which was used in 2004 (see Figure 3.13).

Aragonite To see the impact of the limestone reactivity, we switched from ATF40 limestone to high-reactivity Aragonite during oxygen firing with the Tri-Star coal and continued with Aragonite for the oxygen firing with pet coke.

The chemical analyses of the sorbents are given in Table 3.5 along with the size distribution of the limestones.

Table 3.5: PSD and Chemical Analysis of Lime and Limestones

PPL Sample No.	5-3066-L	5-2730-LS	5-3067-LS	5-3068-LS	5-3069-LS
Sample I.D.	Hydrated Lime from Feeder	ATF 40 from Bunker	ATF 40 from Feeder	ATF 40 from Feeder	Aragonite from Feeder
Sample Start	6/16/05 19:30	4/28/05	6/18/05 11:45	6/19/05 21:00	6/20/05 16:00
Sample End	6/18/05 11:45		6/19/05 21:00	6/20/05 16:00	------
% Total Moisture	1.34	0.01	0.14	0.07	0.58
Dry Basis					
% as $CaCO_3$	9.5	94.4	92.9	93.9	95.0
% as $MgCO_3$	1.8	1.5	1.2	1.2	0.7
% Inerts (difference)	4.9	4.1	5.9	4.9	4.3
Active Lime as $Ca(OH)_2$	83.9				
Wt % Retained on					
1.18 mm (16 Mesh)			0	0.15	0.81
600 µm (30 Mesh)		0.06	0.06	0.59	8.92
300 µm (50 Mesh)		11.21	11.42	13.60	27.23
212 µm (70 Mesh)		21.03			
150 µm (100 Mesh)		26.24	47.59	48.23	52.87
75 µm (200 Mesh)			28.70	25.43	9.00
Pan		41.46	12.23	12.00	1.17

The limestone sizes are plotted in Figure 3.11. The lime size distribution according to CiLas laser measurement is shown in Figure 3.12.

The results of thermo-gravimetric analysis (TGA) tests of limestone reactivity are shown in Figure 3.13 for ATF40, Aragonite, and Chemstone (used in 2004).

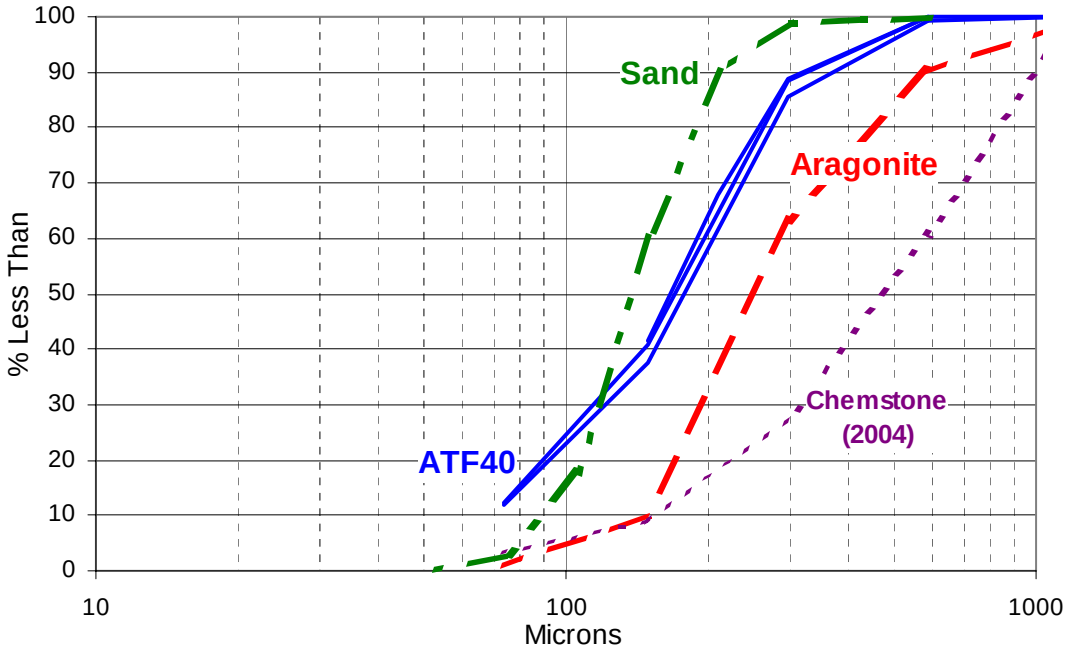

Figure 3.11: Limestone and Sand Screen Size Distribution

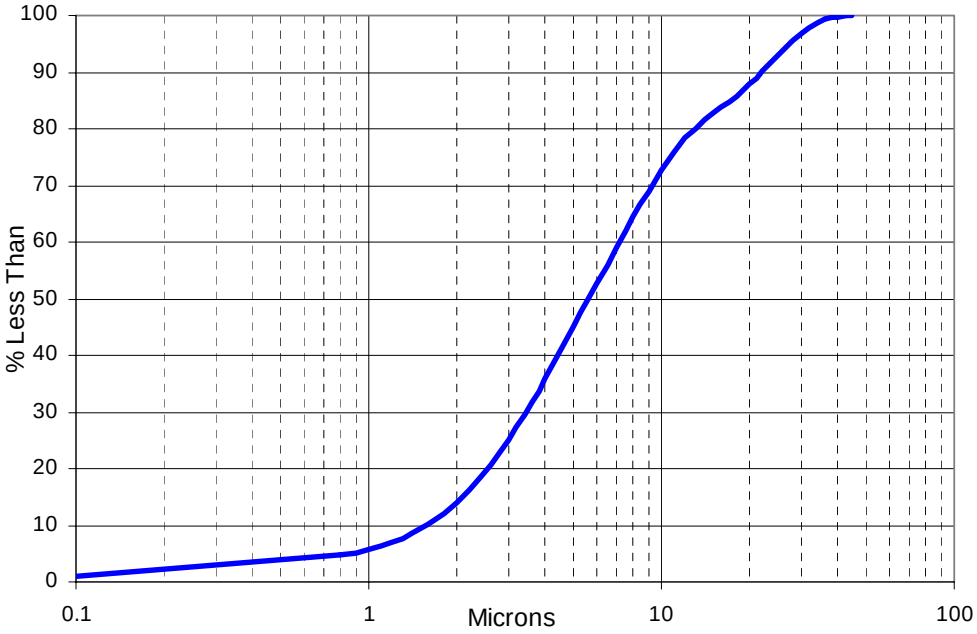

Figure 3.12: Lime CILAS Size Distribution

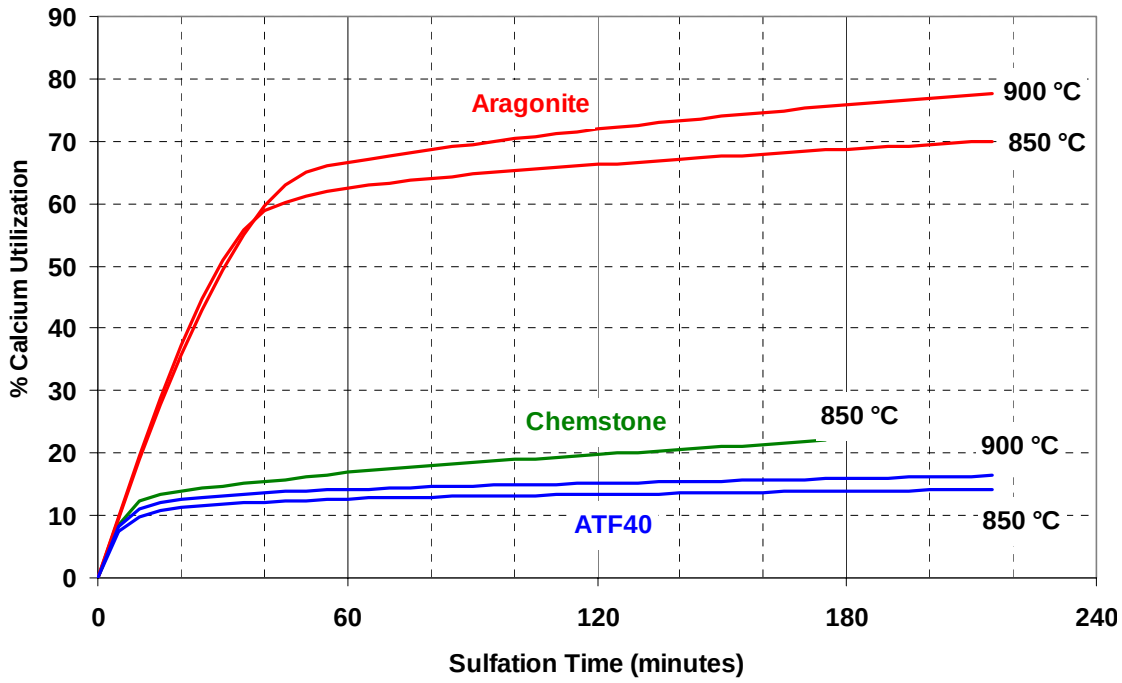

Figure 3.13: Limestone TGA Results

3.3.3 Sand

The starting material for the combustor was an inert silica sand, supplied by U. S. Silica. The typical size distribution of the F-95 sand from the product data sheet was shown in Figure 3.11. The sand is reported to be 99.8 % SiO_2.

3.4 Test Description and Conditions

3.4.1 Test Matrix and Objectives.

The objectives for the test week (Figure 3.14) were

- Run with the Tri-Star coal air-fired, with hydrated lime fed to the backend FDA
- Run with the Tri-Star coal on 30% O_2 in CO_2 balance, with hydrated lime fed to the backend FDA
- Run with the Tri-Star coal air-fired with limestone to the furnace and backend FDA capture with fly ash.
- Run with the Tri-Star coal on 30% O_2 in CO_2 balance, with limestone to the furnace and backend FDA capture with fly ash.
- Run with the petcoke on 30% O_2 in CO_2 balance, with limestone to the furnace and backend FDA capture with fly ash.

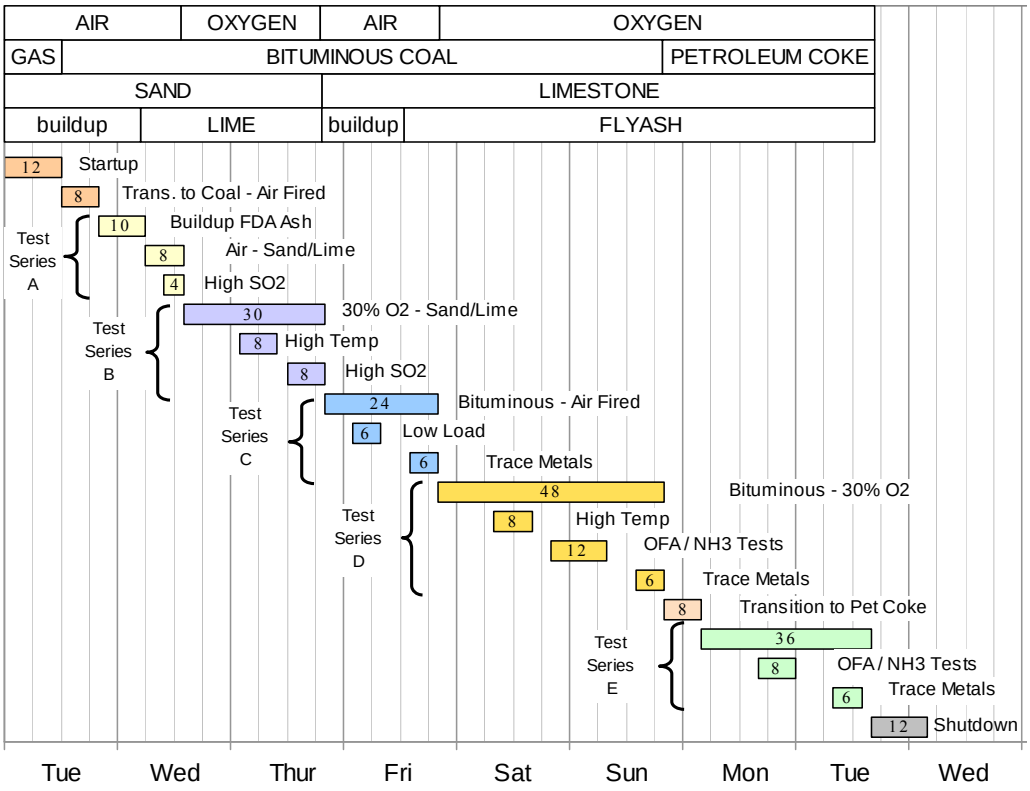

Figure 3.14: MTF Test Matrix

Test Points

From the nine days testing, several test points have been defined when the furnace was at certain specified conditions – see Table 3.6 and Figure 3.15. The time duration for these test points ranges between 33 minutes and eight hours. They are not necessarily considered to be steady state points.

A brief discussion of each test point follows. The test week started on Monday, June 13, 2005 with air firing. The furnace and external heat exchangers were initially charged with sand. The baghouse was empty. The facility reached full coal firing on Tuesday morning, June 14. Most of Tuesday was used to accumulate fly ash inventory in the baghouse in preparation for lime fed to the baghouse.

Test Point A1 - A six-hour period with air firing after achieving full temperature. This is before lime feed to the baghouse.

Test Point A2 - At 22:00 on June 14 we began lime feed to the baghouse. Point A2 is the final 4 hours of this condition.

Test Point A3 - At 06:00 on June 15 we added sulfur to the furnace and increased the lime flow to the baghouse proportionally. This was to match the SO_2 concentration of the oxygen-fired tests.

At 11:30 on June 15 we transitioned to oxygen firing, but were forced to shut down 3 hours later due to a bearing failure in the I.D. fan.

Table 3.6: Selected Test Points

Test Point	Testing Time			Fuel	Sorbent Injection		Combustion Medium	Special Measurements	Relative Humidity in FDA (%)	Firing Rate	
	Start	End	Duration		Lime into FDA (Ca/S)	Limestone into Furnace (Ca/S)				MW_{th}	MMBtu/hr
A1	6/14 16:00	6/14 22:00	6:00	Tri-Star mvb Coal	0.1	None	Air		0	2.80	9.57
A2	6/15 02:00	6/15 06:00	4:00		1.3					2.79	9.55
A3	6/15 08:30	6/15 10:30	2:00		1.3					2.85	9.71
B1	6/16 22:00	6/17 02:00	4:00	Tri- Star mvb Coal	1.0	None	30% O_2/70% CO_2			2.78	9.51
B2	6/17 12:00	6/17 14:00	2:00		0.0					2.85	9.74
B3	6/17 12:00	6/17 17:30	1:30		1.3				30	2.86	9.75
B4	6/17 19:00	6/17 21:00	2:00		1.4				50	2.86	9.75
B5	6/17 21:30	6/17 23:30	1:30		1.1				70	2.85	9.74
B6	6/17 23:45	6/18 01:20	1:35		1.4				70	2.85	9.74
C1	6/18 06:00	6/18 08:00	2:00	Tri-Star mvb Coal	None	ATF40 Ca/S = 1.8	Air		0	2.82	9.63
C2	6/18 10:00	6/18 13:00	3:00			ATF40 Ca/S = 2.00			50	2.82	9.64
C3	6/18 16:00	6/18 17:30	1:30						70	2.83	9.65
C4	6/18 18:30	6/18 23:00	4:30					Hg & Other Trace Elements	50	2.82	9.64
C5	6/19 00:00	6/19 22:15	5:00						50	2.22	7.58
D1	6/19 09:00	6/19 15:00	6:00	Tri-Star mvb Coal	None	ATF40 Ca/S = 2.00	30% O_2/70% CO_2		55	2.84	9.70
D2	6/18 18:00	6/19 20:00	2:00						75	2.85	9.71
D3	6/20 08:00	6/20 16:00	8:00					Hg & Other Trace Elements; NH_3 Injection	70	2.84	9.70
D4	6/20 20:00	6/20 22:01	2:00			Aragonite Ca/S = 2.0			70	2.85	9.71
E1	6/21 06:00	6/21 11:00	5:00	Petroleum Coke	None	Aragonite Ca/S = 1.4	30% O_2/70% CO_2	Hg & Other Trace Elements; NH_3 Injection	70	2.92	9.98
E2	6/21 16:50	6/21 19:40	2:50			Aragonite Ca/S = 1.3			70	2.93	10.01
E3	6/21 20:40	6/21 21:13	0:33			Aragonite Ca/S = 1.4			50	2.93	10.01

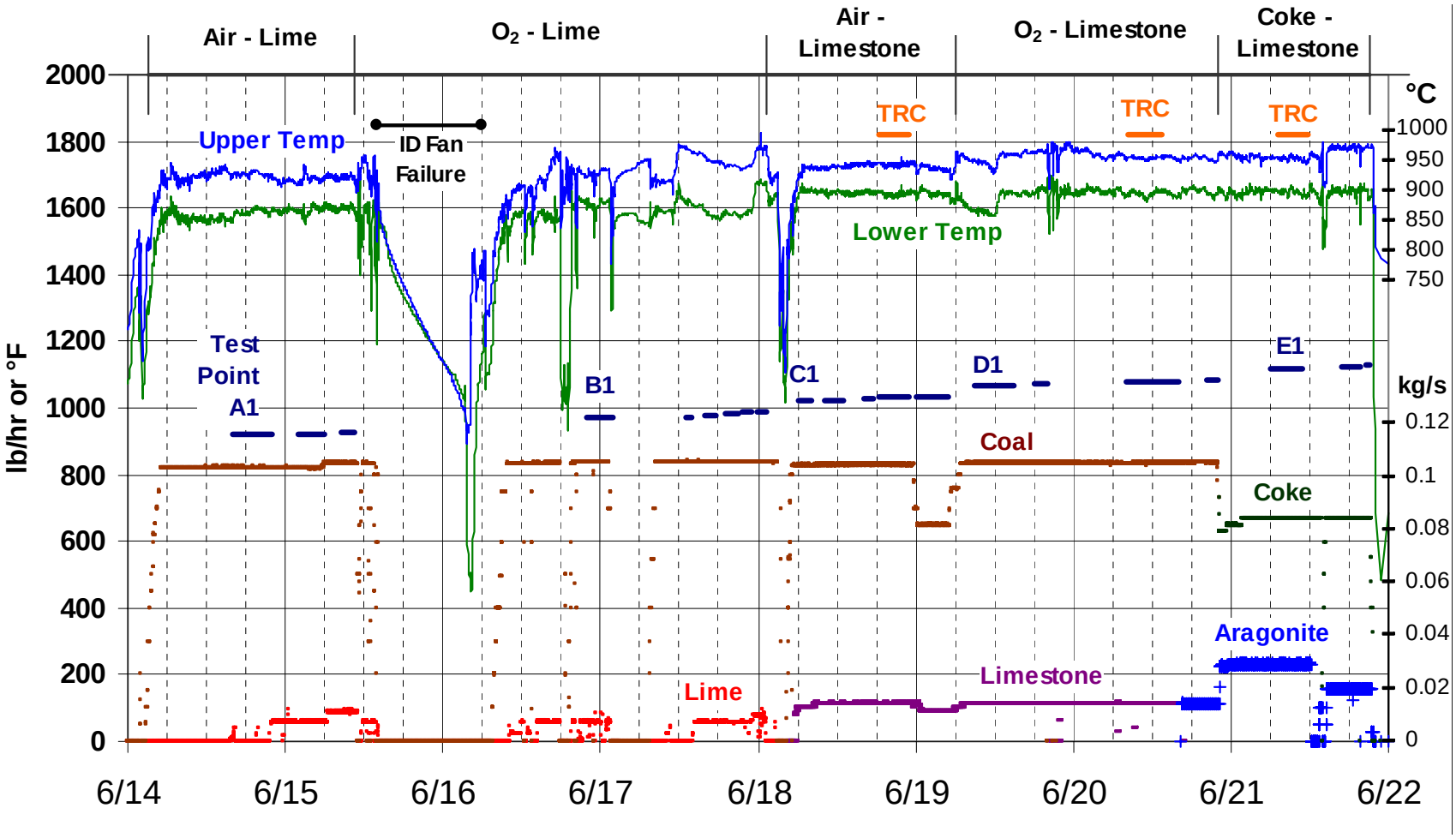

Note: The bars for Test Points, ID Fan Failure, and TRC Testing indicate times only; their "y-axis" values are arbitrary

Figure 3.15: MTF Test Summary Figure

Test Point B1 - At about 22:00 on June 16 we were at full coal with oxygen firing - 30% Global O_2. At 02:00 the next morning we ran out of CO_2 due to delivery problems. We switched to air firing through the night.

Test Point B2 - At midday on June 17 we were back at base conditions with 30% O_2 firing with no limestone to the furnace and no lime to the baghouse.

Test Point B3 - At about 15:00 we started lime feed to the baghouse and water to bring the relative humidity to about 30%.

Test Point B4 - Increased the relative humidity out of the baghouse to about 50%.

Test Point B5 - Increased the relative humidity out of the baghouse to about 70%.

Test Point B6 - Increased the furnace temperature.

Again overnight delivery problems caused us to run out of CO_2, so we ended Test B and moved on to the air-fired Test C. We shut off lime and water flow to the baghouse and began feeding the ATF40 limestone to the furnace.

Test Point C1 - Air-fired test point with limestone to the furnace and no lime to the baghouse as the fly ash inventory starts to turn over.

Test Point C2 - Increased the limestone flow to the furnace to a Calcium-to-Sulfur ratio (Ca/S) of 2.0 and began water flow to the baghouse for backend sulfur capture at a relative humidity of 50%.

Test Point C3 - Increased relative humidity to 70%.

Test Point C4 - Returned to 50% relative humidity. Increased the overfire (and total) airflow slightly. During this test period, TRC took duplicate samples at the baghouse inlet and outlet.

Test Point C5 - Reduced the load from 9.6 to 7.4 MMBtu/hr. Reduced the overfire air to maintain the fluidizing velocity at the grid.

At about 06:00 on June 19 we ended the air-fired test and switched to oxygen firing with 30% global O_2.

Test Point D1 - The initial test period with ATF40 limestone and oxygen firing. The relative humidity at the baghouse outlet is about 55%.

Test Point D2 - A short test period with the relative humidity increased to about 75%.

At this point we began some high temperature tests, but the control logic repeatedly tripped the unit at the higher temperatures. These test points were abandoned.

Test Point D3 - A longer steady test period at about 70% relative humidity. During this test period, TRC took duplicate samples at the baghouse inlet and outlet.

Test Point D4 - At about 16:30 on June 20, we switched from the low reactivity ATF40 limestone to the high reactivity aragonite. The SO_2 emission from the furnace quickly dropped due to the more reactive sorbent. This short test point was at the end of the bituminous firing.

Test Point E1 - At about 22:00 on June 20 we switched to petroleum coke firing. The aragonite feed rate was increased to maintain a Ca/S ratio of 2.0. During this initial test period, TRC took duplicate samples at the baghouse inlet and outlet.

Test Point E2 - At about noon on June 21 we shut off the limestone for an hour then re-established at a reduced Ca/S ratio of about 1.35.

Test Point E3 - The water flow to the baghouse was reduced to drop the relative humidity from 70% to about 50%.

After a very short test point E3, a solids leak in the rotary valve below the FBHE became worse, at which point we terminated the test.

3.5 Test Results and Analysis

This section provides test data analysis results for the testing described previously in Section 3.4.

3.5.1 Operability

Throughout the test week, there were no operational problems attributable to the oxygen firing. In the 2004 tests, there was operational evidence of recarbonation problems in the sealpot and in the cyclone hopper (with pet coke). In 2005, the sealpot was fluidized with air to avoid operational problems (with the tradeoff of higher N_2 in the flue gas). Also the cyclone temperature was maintained above the recarbonation temperature. One way to avoid recarbonation problems commercially is to add no limestone to the furnace - as tested here in Test Series A and B (see Figure 3.14). Even with limestone added to the furnace, the cyclone and sealpot stay hotter in a commercial plant than the smaller MTF pilot, so recarbonation will be less of an issue.

3.5.2 Approaches to Steady State

Some things can change and respond to changes rapidly in a CFB. For example, NO_x emissions will quickly respond to a change in air staging and a change in furnace temperature will quickly affect the CO emissions. Changes in ash composition can take much longer - the solids inventory is large compared to the feed rate. SO_2 emissions, for example, will change quickly if the limestone feedrate is changed, but there is a longer term effect as the composition of the bed inventory reaches a new steady state value.

Figure 3.16 shows one measure of bed ash composition - the mass ratio of calcium to inert (Ca:I) in the ash. Figure 3.16 shows the value for selected samples of different ashes as well as the calculated steady state value based on the feed rates and compositions of the fuel and limestone.

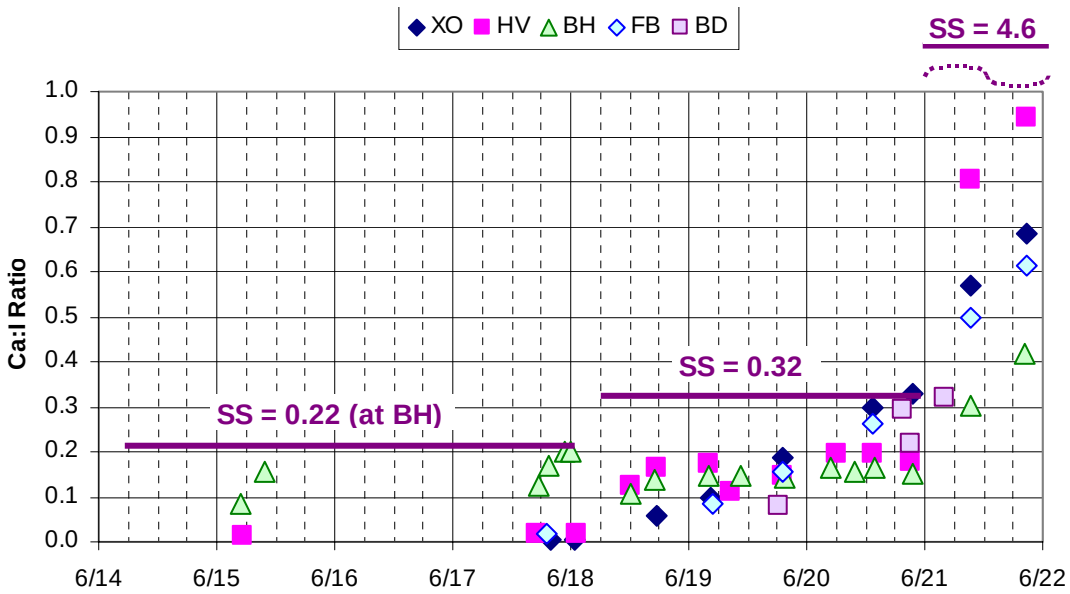

Figure 3.16: Calcium-to-Inert Ratio of Ash Samples

For the first four days of testing, the Ca:I ratio in the furnace is about zero, since no limestone was added. At the baghouse (where lime was added) the calculated ratio is 0.22. The baghouse samples (BH) approached this value.

For the next three days, with bituminous coal and limestone at a Ca:S ratio of about 2:1, the calculated overall Ca:I ratio is about 0.32. The samples of bed drain (BD) and circulating material (XO and FB) reached this value at the end of the three days. The fly ash ratio more quickly approached a steady value that is lower (HV and BH). It is often the case that the ash in the coal is finer than the added limestone (i.e., not a lot of rocks in the coal). In this case, the fly ash will reach a steady Ca:I ratio lower than the calculated overall value; the bed drain should have a higher ratio to maintain the mass balance.

For the last day with pet coke, the calculated Ca:I ratio is about 4.6; much higher due to the very low fuel ash and high sulfur. The measured values jumped markedly, but did not approach steady state in the one day of pet coke firing. Note that the fly ash at the baghouse drain (BH) changed more slowly than fly ash at the furnace outlet (HV). This is expected, due to the additional inventory in the baghouse.

3.5.3 Furnace Temperature and Pressure Profiles

Temperature profiles along the furnace height and pressure profiles along the primary recirculation loop are useful indications of the furnace conditions. Figure 3.17 gives a key to the temperature and pressure locations in the MTF.

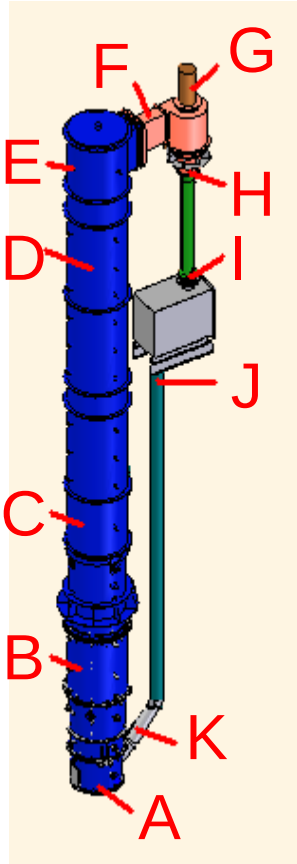

Figure 3.17: Key for Temperature and Pressure Locations

Average data from these temperature and pressure profiles are summarized in Table 3.7. The furnace temperatures are averaged at four elevations and the pressure drop is split into two sections. This summary data is plotted in Figure 3.18 and Figure 3.19.

Table 3.7: Summary of Temperature and Pressure Profiles

Test Point	Temperatures										Pressures								Velocities			
	Bottom		Mid 1		Mid 2		Upper		Sealpot		Total		Upper		Lower		Grid		Grid		Upper	
	°C	°F	°C	°F	°C	°F	°C	°F	°C	°F	cm.w.g	in.w.g.	cm.w.g	in.w.g.	cm.w.g	in.w.g.	cm.w.g	in.w.g.	m/s	ft/sec	m/s	ft/sec
A1	871	1600	900	1651	917	1682	928	1702	892	1637	34.2	13.5	12.9	5.1	21.4	8.4	95.1	37.4	5.2	17.0	4.3	14.2
A2	868	1594	894	1641	909	1668	920	1689	881	1618	52.0	20.5	12.6	5.0	39.3	15.5	91.7	36.1	5.1	16.8	4.4	14.5
A3	873	1603	897	1647	912	1674	924	1696	882	1620	61.2	24.1	11.0	4.3	50.5	19.9	89.3	35.2	5.1	16.7	4.4	14.5
B1	877	1611	892	1638	914	1678	929	1704	853	1567	119.0	46.8	9.4	3.7	109.9	43.3	41.9	16.5	4.5	14.6	3.2	10.4
B2	882	1620	913	1675	950	1742	969	1777	845	1553	73.0	28.8	3.7	1.4	70.1	27.6	57.3	22.6	4.5	14.8	3.3	10.7
B3	861	1581	889	1633	927	1701	949	1739	850	1561	87.2	34.3	4.8	1.9	82.2	32.3	51.6	20.3	4.5	14.7	3.2	10.5
B4	863	1586	887	1628	920	1687	940	1724	844	1552	102.4	40.3	5.5	2.2	97.4	38.3	43.2	17.0	4.5	14.7	3.2	10.4
B5	865	1590	886	1627	917	1683	937	1719	843	1550	103.5	40.8	5.9	2.3	98.0	38.6	43.2	17.0	4.6	15.0	3.2	10.4
B6	914	1677	932	1709	957	1755	973	1783	870	1598	101.9	40.1	6.4	2.5	95.0	37.4	46.0	18.1	4.8	15.7	3.3	10.7
C1	902	1656	917	1683	927	1700	936	1717	901	1653	59.6	23.5	20.4	8.0	39.8	15.7	100.7	39.6	5.1	16.9	4.3	14.0
C2	899	1651	919	1686	930	1707	940	1724	903	1658	51.6	20.3	17.3	6.8	34.5	13.6	101.4	39.9	5.1	16.8	4.2	13.8
C3	900	1652	922	1692	935	1715	945	1734	909	1668	43.0	16.9	15.9	6.3	27.0	10.6	108.4	42.7	5.2	17.2	4.3	14.1
C4	897	1646	920	1688	934	1713	944	1732	908	1666	39.5	15.6	14.7	5.8	24.4	9.6	110.1	43.4	5.3	17.2	4.4	14.5
C5	897	1646	915	1679	927	1701	939	1721	869	1596	59.6	23.5	9.3	3.7	50.4	19.8	105.3	41.5	5.1	16.9	3.6	11.9
D1	878	1612	899	1651	930	1706	950	1741	843	1549	102.7	40.4	4.8	1.9	98.3	38.7	43.7	17.2	4.5	14.7	3.2	10.5
D2	903	1657	922	1692	950	1741	966	1771	880	1616	76.6	30.1	6.8	2.7	70.0	27.6	50.2	19.8	4.6	15.1	3.2	10.6
D3	898	1648	915	1679	939	1722	955	1751	878	1613	104.0	40.9	8.2	3.2	95.9	37.7	42.0	16.5	4.5	14.9	3.2	10.6
D4	898	1648	914	1678	937	1718	952	1746	880	1616	107.6	42.3	7.7	3.0	99.4	39.1	40.1	15.8	4.5	14.8	3.2	10.6
E1	901	1654	917	1682	941	1725	956	1752	881	1618	102.3	40.3	9.6	3.8	92.6	36.4	44.1	17.4	4.7	15.3	3.2	10.5
E2	901	1653	925	1697	959	1757	975	1787	873	1603	80.0	31.5	5.1	2.0	74.8	29.5	53.2	20.9	4.6	14.9	3.2	10.5
E3	892	1637	919	1686	956	1753	976	1788	885	1625	92.7	36.5		1.8	88.0	34.7	47.8	18.8	4.5	14.6	3.1	10.3

Key - refer to Figure 3-17
Bottom - average of bottom 6 temperatures at 3 elevations
Mid 1 - average of three temperatures at location B
Mid 2 - average of three temperatures at location C and next level up
Upper - average of three temperatures at location D and next level down
Sealpot - temperature leaving the sealpot
Total Pressure Drop - Point A to Point E
Lower Pressure Drop - Point A to Point B
Upper Pressure Drop - Point B to Point E

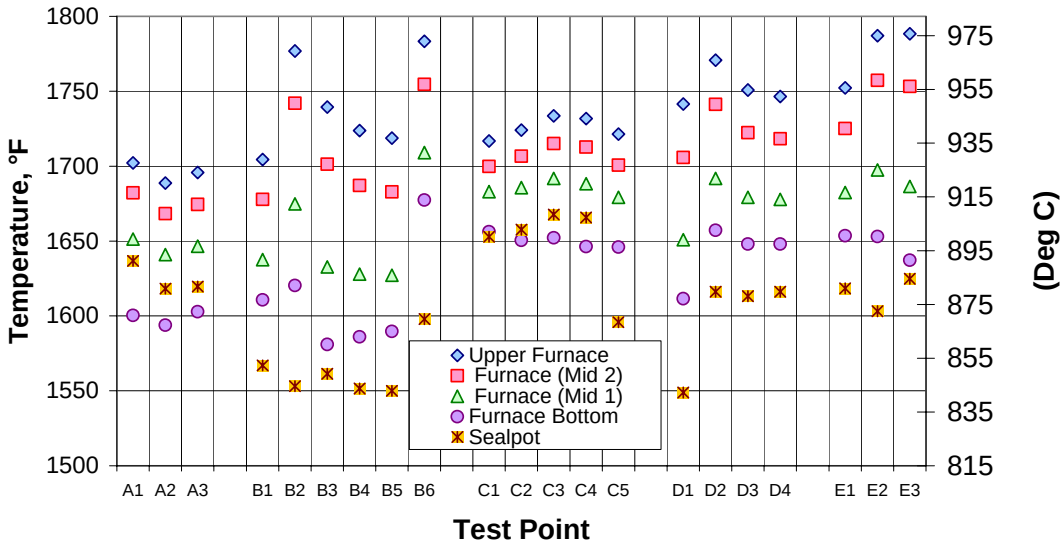

Figure 3.18: Summary of Temperature Profiles

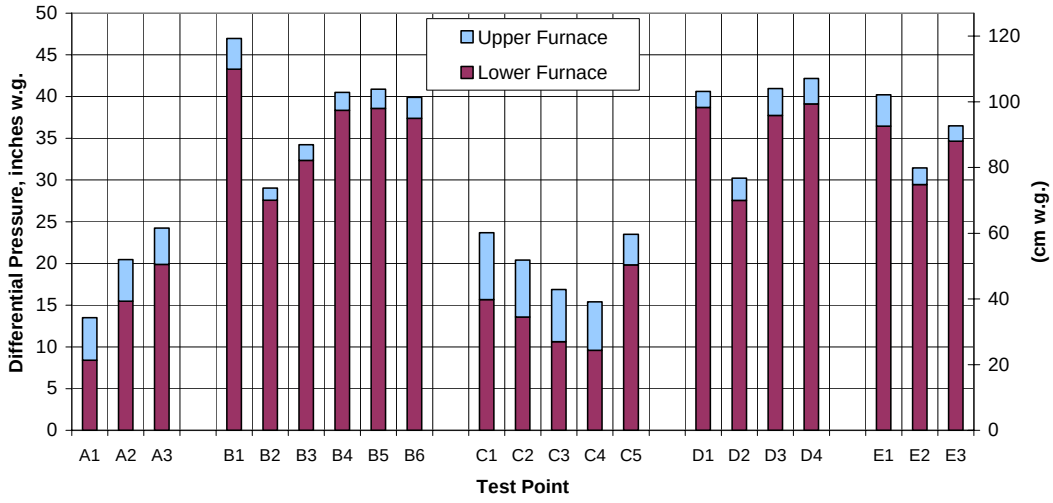

Figure 3.19: Summary of Furnace Pressure Drop

The calculated velocities in the upper furnace and at the grid are plotted in Figure 3.20.

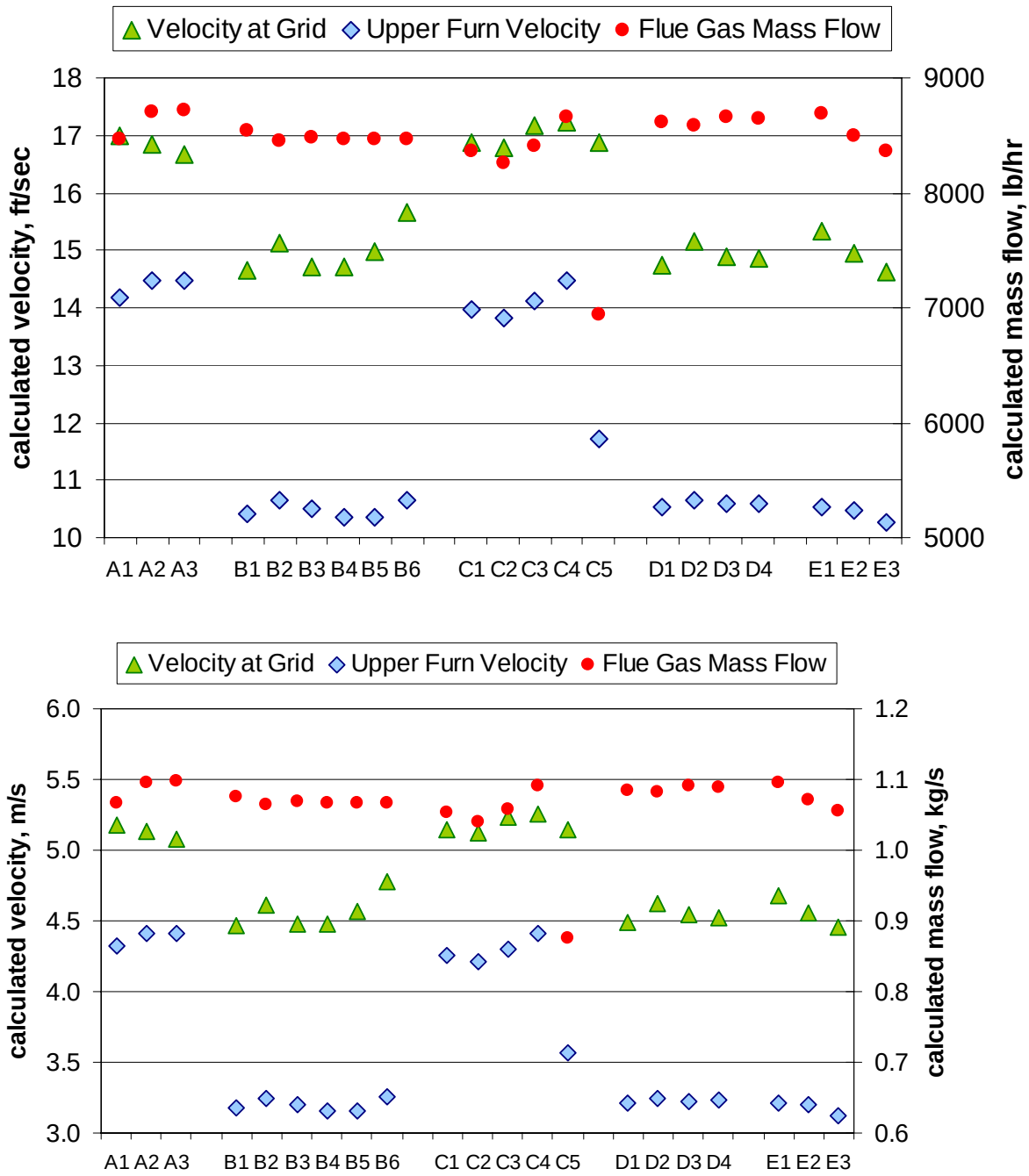

Figure 3.20: Calculated Velocities and Gas Flow Rates

The velocity at the grid plate is calculated based on the primary oxidant flow through the grid plate. The velocity in the upper furnace is based on the calculated flue gas flow rate which includes all the oxidant plus the gaseous products of coal combustion. The flue gas flow is also plotted in Figure 3.20. At the 30% global oxygen content of the oxidant, the mass flow rate of flue gas is similar to that of air firing. The velocity is lower with oxygen firing because the molecular weight of CO_2 is greater than N_2.

3.5.4 Solids Samples

A list of all the solid samples taken during the test is given in Table 3.8. The sample types given in Table 3.8 through Table 3.10 have the following key:

hv - hi volume pseudo-isokinetic sample taken at the cyclone outlet

xo - pseudo-isokinetic sample taken at the crossover duct (cyclone inlet)

bd - sample of bed drain material

bh - sample of baghouse fly ash

fb - sample drained from fluid bed heat exchanger

fp - deposit from convective heat transfer / fouling probes

The results of chemical analyses of selected solids samples are given in Table 3.9 through Table 3.11

Table 3.8: List of Solids Samples Taken

Test	Date Time	Sample	Test	Date Time	Sample	Test	Date Time	Sample	Test	Date Time	Sample	Test	Date Time	Sample	Test	Date Time	Sample	Test	Date Time	Sample
	6/14 10:30	hv		6/16 15:43	bh		6/18 04:05	bh	C4	6/18 22:33	bh		6/19 17:00	bh	D3	6/20 13:45	bh		6/21 04:10	bh
	6/14 14:10	bh		6/16 16:45	bh		6/18 05:20	bh		6/18 23:35	bh	D2	6/19 18:07	bh	D3	6/20 15:04	bh		6/21 04:10	bh
	6/14 14:25	bh		6/16 17:50	bh	C1	6/18 06:49	bh	C5	6/19 01:00	bh	D2	6/19 18:35	bh		6/20 16:30	bh		6/21 04:30	hv
	6/14 22:30	bh		6/16 19:45	bh	C1	6/18 07:40	fb	C5	6/19 02:15	hv	D2	6/19 19:00	bd		6/20 16:40	bh		6/21 04:50	xo
	6/15 00:00	bh		6/16 21:40	bh	C1	6/18 07:40	xo	C5	6/19 02:15	xo	D2	6/19 19:00	fb		6/20 17:44	bd	E1	6/21 06:14	bd
	6/15 01:00	bh	B1	6/16 22:50	bh	C1	6/18 07:40	xo	C5	6/19 02:30	bh	D2	6/19 19:00	hv		6/20 19:45	xo	E1	6/21 07:20	bh
	6/15 01:45	bh	B1	6/17 00:00	bh		6/18 08:03	bh	C5	6/19 02:40	fb	D2	6/19 19:00	xo		6/20 19:47	bh	E1	6/21 08:50	bd
A2	6/15 03:20	bh	B2	6/17 12:58	bh		6/18 09:09	bh	C5	6/19 04:15	bh	D2	6/19 19:43	bh		6/20 19:43	bd	E1	6/21 09:10	fb
A2	6/15 04:20	bh		6/17 14:33	bh	C2	6/18 10:00	hv	C5	6/19 04:15	bh		6/19 21:23	bh	D4	6/20 20:00	fb	E1	6/21 09:10	hv
A2	6/15 05:00	bh		6/17 15:25	bh	C2	6/18 10:00	xo	C5	6/19 04:46	fb		6/19 22:00	bd	D4	6/20 20:00	hv	E1	6/21 09:10	xo
A2	6/15 05:20	hv	B3	6/17 16:15	bh	C2	6/18 10:00	bh	C5	6/19 04:46	hv		6/19 23:40	bh	D4	6/20 21:15	bd	E1	6/21 09:10	bh
	6/15 06:15	bh	B3	6/17 17:00	hv	C2	6/18 11:05	bh	C5	6/19 04:46	xo		6/20 01:40	bh	D4	6/20 21:20	hv		6/21 12:00	fb
	6/15 06:57	bh	B3	6/17 17:19	bh	C2	6/18 12:05	bh		6/19 06:00	bh		6/20 02:30	hv	D4	6/20 21:15	bh		6/21 12:00	hv
	6/15 07:29	bh		6/17 18:24	bh	C2	6/18 12:15	hv		6/19 07:57	bh		6/20 02:45	fb	D4	6/20 21:30	xo		6/21 12:00	xo
	6/15 08:12	bh	B4	6/17 19:06	fb	C2	6/18 12:30	xo		6/19 08:34	fb		6/20 03:20	bh	D4	6/20 21:40	bh		6/21 13:45	bd
A3	6/15 08:57	bh	B4	6/17 19:29	bh		6/18 13:05	bh		6/19 08:30	hv		6/20 04:50	bh		6/20 23:00	bd		6/21 16:39	bh
A3	6/15 09:43	bh	B4	6/17 19:45	xo		6/18 13:17	bh		6/19 08:34	xo		6/20 06:00	xo		6/21 00:40	bd	E2	6/21 18:00	fb
A3	6/15 10:28	bh	B4	6/17 20:30	bh		6/18 14:35	xo	D1	6/19 10:30	bh		6/20 06:10	hv		6/21 00:40	fb	E2	6/21 18:10	hv
	6/15 11:10	bh	B5	6/17 21:41	bh		6/18 14:36	bh	D1	6/19 12:28	bh		6/20 06:45	bh		6/21 00:40	bh	E2	6/21 18:10	bh
	6/15 11:54	bh	B5	6/17 22:55	bh		6/18 14:40	hv	D1	6/19 12:41	bd	D3	6/20 08:12	bh		6/21 00:40	bh	E2	6/21 18:40	fb
	6/15 12:44	bh		6/17 23:30	hv		6/18 15:40	bh	D1	6/19 12:50	fb	D3	6/20 09:34	bh		6/21 01:00	hv	E2	6/21 18:40	xo
	6/15 13:32	bh		6/17 23:30	xo	C3	6/18 17:06	bh	D1	6/19 12:50	hv	D3	6/20 10:49	bh		6/21 01:15	xo		6/21 20:30	bh
	6/15 14:20	bh	B6	6/17 23:55	bh	C3	6/18 17:20	hv	D1	6/19 12:50	xo	D3	6/20 12:15	bh		6/21 02:45	bh	E3	6/21 20:45	fb
	6/16 12:10	bh	B6	6/18 01:10	hv	C3	6/18 17:25	xo	D1	6/19 13:40	bh	D3	6/20 13:30	fb		6/21 02:45	bh	E3	6/21 20:45	hv
	6/16 13:00	bh	B6	6/18 01:10	xo	C4	6/18 19:46	bh	D1	6/19 14:58	bh	D3	6/20 13:30	hv		6/21 04:10	bd	E3	6/21 20:45	xo
	6/16 13:50	bh		6/18 02:10	bh	C4	6/18 21:08	bh		6/19 16:45	bd	D3	6/20 13:30	xo		6/21 04:10	fb		6/21 21:32	bh
	6/16 14:42	bh		6/18 03:00	bh														post-test	fp

Table 3.9: Analyses of Fly Ash Solids Samples

Test Point	Date Time	Sample	Lab #	% Ca	% Mg	% Carbonate as CO_2	% Total Carbon	% Total Sulfur	% Sulfite as S	% Active Lime as CaO	% CO_2 as $CaCO_3$	% $CaSO_3$	% $CaSO_4$	Remaining Ca as CaO	% Mg as MgO	% Unburned C	% Inerts (diff)	Ca:S mole ratio	% Recarb	Ca:I
A2	6/15/05 05:20	hv	5-3085-A	1.19	0.28	0.31	17.67	0.57			0.71		2.42	0.27	0.46	17.59	78.55	1.67	23.7	0.0151
B3	6/17/05 17:00	hv	5-3086-A	1.19	0.32	0.26	21.42	0.69			0.59		2.93	0.13	0.53	21.35	74.47	1.38	19.9	0.0160
B6	6/18/05 01:10	hv	5-3087-A	1.19	0.32	0.45	19.80	0.74			1.02		3.14	-0.20	0.53	19.68	75.83	1.29	34.5	0.0157
C2	6/18/05 12:15	hv	5-3088-A	8.80	0.25	1.08	11.95	1.96			2.46		8.32	7.51	0.41	11.66	69.64	3.59	11.2	0.1264
C3	6/18/05 17:20	hv	5-3089-A	10.75	0.28	1.62	11.53	2.34			3.68		9.94	8.88	0.46	11.09	65.94	3.67	13.7	0.1630
C5	6/19/05 04:15	hv	5-3090-A	10.63	0.38	1.79	15.62	2.74			4.07		11.63	7.80	0.63	15.13	60.73	3.10	15.3	0.1750
	6/19/05 08:30	hv	5-3091-A	7.27	0.43		19.70	2.10					8.92	6.50	0.71	19.70	64.17	2.77		0.1133
D2	6/19/05 19:00	hv	5-3092-A	9.15	0.39	1.28	16.60	2.77			2.91		11.76	6.33	0.65	16.25	62.10	2.64	12.7	0.1473
	6/20/05 06:10	hv	5-3093-A	11.93	0.39		13.10	3.49		7.45			14.82	10.59	0.65	13.10	60.85	2.73		0.1961
D3	6/20/05 13:30	hv	5-3094-A	11.59	0.40	1.09	14.12	3.50			2.48		14.86	8.71	0.66	13.82	59.47	2.65	8.6	0.1949
D4	6/20/05 21:20	hv	5-3095-A	10.89	0.37	1.35	13.55	3.16		5.22	3.07		13.42	7.99	0.61	13.18	61.73	2.76	11.3	0.1764
E1	6/21/05 09:10	hv	5-3096-A	25.01	0.28	3.74	8.84	8.78			8.51		37.28	14.87	0.46	7.82	31.06	2.28	13.6	0.8052
E3	6/21/05 20:45	hv	5-3097-A	21.24	0.22	2.29	22.02	9.47			5.21		40.21	10.24	0.36	21.40	22.59	1.79	9.8	0.9404
A2	6/15/05 05:00	bh	5-3098-A	5.73	0.29	1.10	16.15	2.38			2.50		10.11	2.45	0.48	15.85	68.61	1.93	17.5	0.0835
A3	6/15/05 09:43	bh	5-3099-A	9.33	0.30	1.56	16.19	3.63			3.55		15.41	4.72	0.50	15.76	60.06	2.06	15.2	0.1553
B3	6/17/05 17:19	bh	5-3100-A	7.93	0.29	1.66	15.82	2.95			3.78		12.53	3.82	0.48	15.37	64.03	2.15	19.1	0.1238
B4	6/17/05 19:34	bh	5-3101-A	10.23	0.31		15.66	4.12	2.19	5.46		8.21	8.19	7.11	0.51	15.66	60.32	1.99		0.1696
B5	6/17/05 22:55	bh	5-3102-A	10.91	0.33	3.07	14.99	4.78			6.98		20.30	2.99	0.55	14.15	55.03	1.83	25.6	0.1983
B6	6/17/05 23:55	bh	5-3103-A	11.08	0.33	2.89	14.81	4.61			6.57		19.57	3.76	0.55	14.02	55.53	1.92	23.8	0.1995
C2	6/18/05 12:05	bh	5-3104-A	7.64	0.25	1.28	11.03	2.38			2.91		10.11	4.90	0.41	10.68	70.99	2.57	15.3	0.1076
C3	6/18/05 17:06	bh	5-3105-A	9.23	0.27	1.33	11.73	2.68			3.02		11.38	6.53	0.45	11.37	67.25	2.75	13.1	0.1373
C5	6/19/05 04:15	bh	5-3106-A	9.83	0.29	1.24	11.38	2.95			2.82		12.53	7.01	0.48	11.04	66.12	2.67	11.5	0.1487
D1	6/19/05 10:30	bh	5-3107-A	9.22	0.34		16.59	3.12					13.25	7.44	0.56	16.59	62.16	2.36		0.1483
D2	6/19/05 19:43	bh	5-3108-A	8.83	0.37	1.17	16.04	3.27			2.66		13.88	5.14	0.61	15.72	61.98	2.16	12.1	0.1425
	6/20/05 04:50	bh	5-3109-A	10.11	0.39		14.32	3.55					15.07	7.94	0.65	14.32	62.02	2.28		0.1630
D3	6/20/05 09:34	bh	5-3110-A	9.67	0.35		14.44	3.55	0.11	4.41		0.41	14.61	7.32	0.58	14.44	62.64	2.18		0.1544
D3	6/20/05 13:45	bh	5-3111-A	10.12	0.36	0.95	13.76	3.66			2.16		15.54	6.55	0.60	13.50	61.65	2.21	8.6	0.1641
D4	6/20/05 21:40	bh	5-3112-A	9.66	0.35	0.96	13.27	3.46			2.18		14.69	6.24	0.58	13.01	63.30	2.23	9.1	0.1526
E1	6/21/05 09:10	bh	5-3113-A	15.68	0.31	2.12	8.60	6.08			4.82		25.82	8.60	0.51	8.02	52.22	2.06	12.3	0.3002
	6/21/05 20:30	bh	5-3114-A	18.91	0.24	2.63	7.31	7.48	0.43	8.12	5.98	1.61	29.93	10.03	0.40	6.59	45.46	2.02	12.7	0.4160
	post-test	fp	5-3278-A	2.13	0.50	0.36	0.15	2.14			0.82		9.09	-1.22	0.88	0.05	90.44	0.80	15.4	0.0236

Table 3.10: Analyses of Bed Solids Samples

Test Point	DateTime	Sample Location	PPL #	% Ca	% Mg	% Carbonate as CO_2	% Total Carbon	% Total Sulfur	% Sulfite as S	Active Lime % CaO	% CO_2 as $CaCO_3$	% $CaSO_3$	% $CaSO_4$	Remaining Ca as CaO	% as MgO	% Unburned C	% Inerts (diff)	Ca:S mole ratio	%Recarb Ca Basis	Ca:I
B4	6/17/05 19:45	xo	5-3076-A	0.43	0.04	0.11	0.19	0.13			0.25		0.55	0.23	0.07	0.16	98.74	2.65	23.3	0.0044
B6	6/18/05 01:00	xo	5-3077-A	0.46	0.04	0.06	0.23	0.14			0.14		0.59	0.32	0.07	0.21	98.67	2.63	11.9	0.0047
C3	6/18/05 17:25	xo	5-3078-A	5.05	0.08	0.14	0.30	0.85			0.32		3.61	5.40	0.13	0.26	90.28	4.75	2.5	0.0559
C5	6/19/05 04:40	xo	5-3079-A	8.25	0.11	0.15	0.17	1.63			0.34		6.92	8.50	0.18	0.13	83.93	4.05	1.7	0.0983
D2	6/19/05 19:00	xo	5-3080-A	13.45	0.18	0.39	0.31	3.17			0.89		13.46	12.78	0.30	0.20	72.37	3.39	2.6	0.1858
D3	6/20/05 13:30	xo	5-3081-A	18.29	0.22	0.28	0.28	4.81			0.64		20.42	16.82	0.36	0.20	61.55	3.04	1.4	0.2972
D4	6/20/05 21:30	xo	5-3082-A	19.43	0.22		0.33	5.08					21.57	18.30	0.36	0.33	59.43	3.06		0.3269
E1	6/21/05 09:10	xo	5-3083-A	25.44	0.22	0.69	0.45	7.42			1.57		31.50	21.74	0.36	0.26	44.56	2.74	2.5	0.5709
E3	6/21/05 20:45	xo	5-3084-A	26	0.19		0.49	9.95					42.25	18.98	0.32	0.49	37.97	2.09		0.6847
B4	6/17/05 19:06	fb	5-3115-A	1.74	0.11		0.15	0.34					1.44	1.84	0.17	0.15	96.39	4.09		0.0181
C5	6/19/05 04:46	fb	5-3116-A	7.42	0.09		0.16	1.38					5.86	7.97	0.15	0.16	85.86	4.30		0.0864
D2	6/19/05 19:00	fb	5-3117-A	11.90	0.13	0.51	0.25	2.63			1.16		11.17	11.40	0.22	0.11	75.94	3.62	3.9	0.1567
D3	6/20/05 13:30	fb	5-3118-A	17.06	0.19	0.44	0.22	4.19			1.00		17.79	15.98	0.31	0.10	64.82	3.26	2.3	0.2632
E1	6/21/05 09:15	fb	5-3119-A	23.66	0.19	0.34	0.65	7.26			0.77		30.83	19.97	0.31	0.56	47.56	2.61	1.3	0.4975
E3	6/21/05 20:45	fb	5-3120-A	25.00	0.18		0.43	9.43					40.04	18.49	0.30	0.43	40.74	2.12		0.6136
D2	6/19/05 18:30	bd	5-3121-A	6.71	0.09		0.80	1.38					5.86	6.98	0.15	0.80	86.22	3.89		0.0778
	6/20/05 19:43	bd	5-3275-A	18.01	0.20	1.29	0.43	4.67			2.93		19.83	15.39	0.33	0.08	61.44	3.08	6.5	0.2931
D4	6/20/05 21:15	bd	5-3122-A	14.70	0.15	1.25	0.71	3.76			2.84		15.96	12.40	0.25	0.37	68.18	3.13	7.7	0.2156
	6/21/05 04:10	bd	5-3276-A	18.28	0.17	1.21	1.74	5.85			2.75		24.84	13.80	0.28	1.41	56.91	2.50	6.0	.3212

Table 3.11: Key for Solids Analyses

Test Point	
Date Time	When Sample Taken
Sample	Type of sample
Lab #	ALSTOM Lab ID #
% Ca	Measured Calcium
% Mg	Measured Magnesium
% Carbonate as CO_2	Measured CO_2 released from Carbonate
% Total Carbon	Measured Total Carbon
% Total Sulfur	Measured Total Sulfur
% Sulfite as S	Measured Sulfite
% Active Lime as CaO	Measurement of "Lime Reactivity"

% CO_2 as $CaCO_3$	Calculated Assuming all CO_2 is as $CaCO_3$
% $CaSO_3$	Calculated Assuming all Sulfite is as $CaSO_3$
% $CaSO_4$	Calculated Assuming Remaining Sulfur is as $CaSO_4$
Remaining Ca as CaO	Calculated Assuming Remaining Calcium is as CaO
% Mg as MgO	Calculated Assuming all Magnesium is as MgO
% Unburned C	Calculated From Total Carbon minus CO_2
% Inerts (diff)	Calculated by Difference
Ca:S mole ratio	Calculated From Total Calcium and Total Sulfur
% Recarb	Calculated $CaCO_3$ as % of Total Calcium (mole basis)
Ca:I	Mass Ratio of Calcium (as Ca) to Inert

3.5.5 Gaseous Emissions

Summary of Emissions

The average emission levels for each defined test period are given in Table 3.12. The flue gas concentrations into and out of the baghouse are shown in

Figure 3.21. With oxy-firing there is some air in-leakage, which brings the N_2 content to about 10% leaving the furnace. It is higher leaving the baghouse since there is additional air introduced there.

Table 3.12: Gaseous Emissions

Test Point	O2	O2 bh	SO2	SO2 bh	CO	NOx	N2O	THC	SO2	SO2 bh	CO	NOx	N2O	THC	SO2	SO2 bh	CO	NOx	N2O	THC
	% dry		ppm dry						lb/MMBtu						gm/GJ					
A1	3.45	6.72	1816	1333	72	70	39	3	3.53	3.18	0.061	0.098	0.051	0.0012	1517	1368	26	42	22	0.5
A2	4.47	7.75	1656	140	77	80	73	2	3.41	0.36	0.069	0.119	0.100	0.0013	1468	156	30	51	43	0.5
A3	4.15	7.69	2569	634	91	82	50	7	5.19	1.63	0.081	0.121	0.068	0.0035	2230	700	35	52	29	1.5
B1	4.37	8.73	2347	892	173	18	21	7	3.34	1.74	0.113	0.028	0.026	0.0042	1437	747	49	12	11	1.8
B2	4.54	9.14	2350	1633	123	25	0	2	3.23	3.22	0.074	0.025	0.000	0.0006	1387	1383	32	11	0	0.3
B3	4.24	8.90	2316	527	145	17	0	1	3.17	1.03	0.087	0.017	0.000	0.0004	1363	442	37	7	0	0.2
B4	3.98	9.00	2376	372	168	14	1	1	3.21	0.74	0.099	0.014	0.001	0.0005	1380	317	43	6	0	0.2
B5	3.85	8.91	2426	257	173	14	2	1	3.27	0.51	0.102	0.014	0.002	0.0004	1405	217	44	6	1	0.2
B6	4.02	9.08	2461	278	149	24	0	2	3.34	0.55	0.088	0.024	0.000	0.0006	1438	238	38	10	0	0.3
C1	3.48	7.46	1060	785	79	110	58	2	2.06	1.98	0.067	0.155	0.075	0.0009	887	850	29	67	32	0.4
C2	3.12	7.37	900	517	75	113	55	2	1.72	1.29	0.063	0.155	0.069	0.0008	738	556	27	67	30	0.3
C3	2.60	7.33	811	458	75	120	37	2	1.50	1.14	0.061	0.161	0.045	0.0007	644	490	26	69	20	0.3
C4	3.24	7.68	713	430	71	130	38	2	1.37	1.10	0.063	0.222	0.047	0.0011	589	472	27	95	20	0.5
C5	3.79	8.61	664	367	63	107	37	1	1.31	1.01	0.055	0.153	0.049	0.0005	565	434	24	66	21	0.2
D1	3.60	9.11	756	377	138	26	12	2	1.02	0.75	0.081	0.026	0.011	0.0006	437	323	35	11	5	0.3
D2	3.46	8.80	775	422	115	46	0	1	1.03	0.82	0.067	0.044	0.000	0.0005	444	352	29	19	0	0.2
D3	3.56	8.72	536	293	113	50	16	1	0.72	0.56	0.067	0.048	0.014	0.0004	310	242	29	21	6	0.2
D4	4.02	8.48	112	31	125	92	25	1	0.15	0.06	0.075	0.091	0.022	0.0004	66	25	32	39	10	0.2
E1	4.23	8.58	107	6	57	104	19	2	0.15	0.01	0.036	0.105	0.017	0.0007	64	5	15	45	7	0.3
E2	4.34	8.59	416	130	0	60	0	1	0.58	0.25	0.000	0.061	0.000	0.0004	251	108	0	26	0	0.2
E3	2.54	7.29	536	245	1	23	0	1	0.74	0.45	0.000	0.022	0.000	0.0004	316	194	0	10	0	0.2

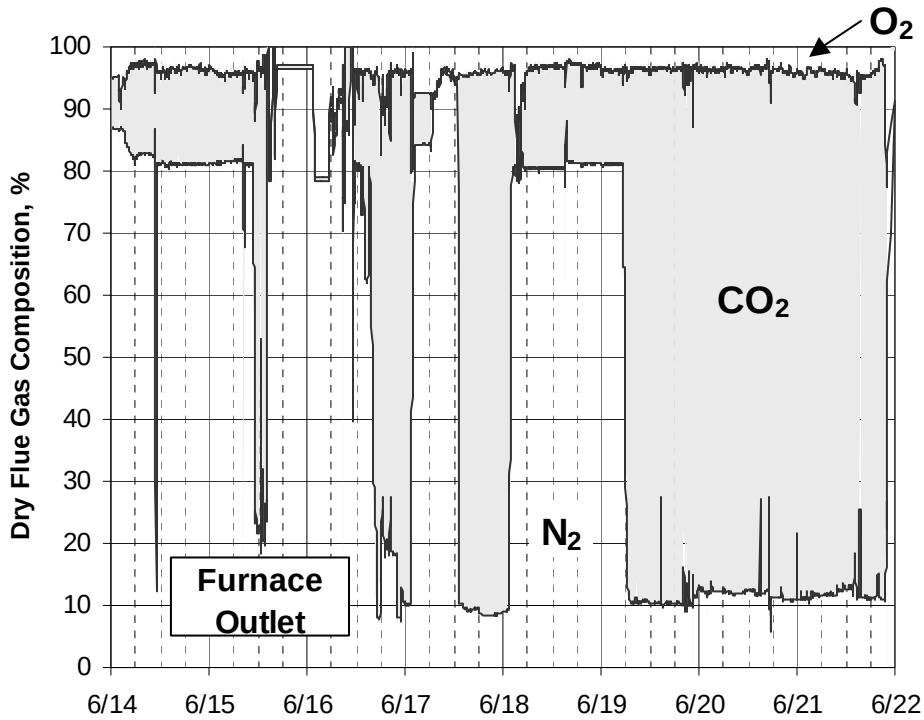

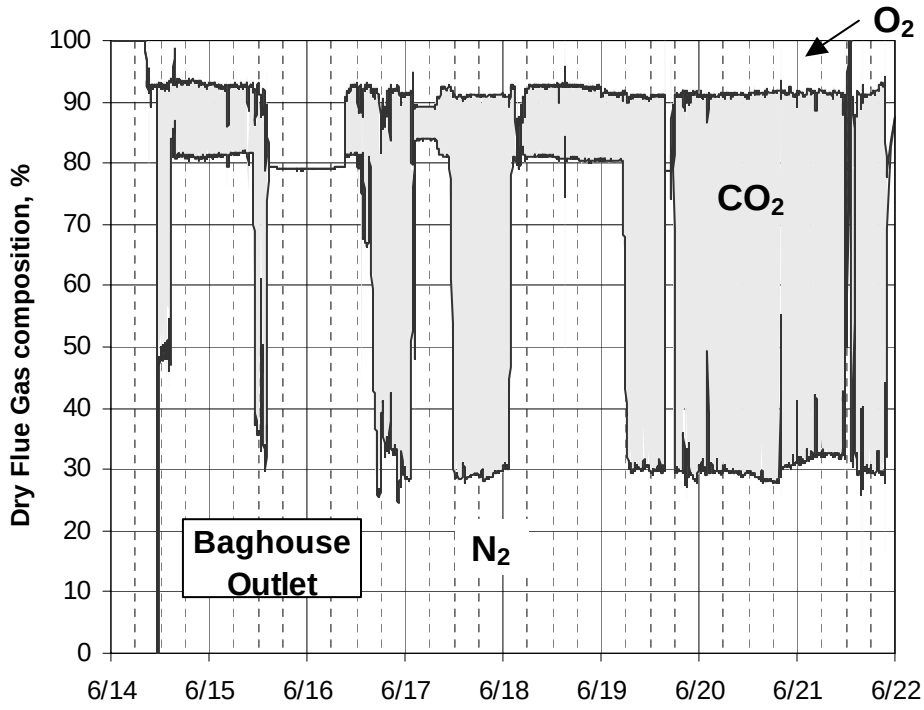

Figure 3.21: Flue Gas Composition at Furnace and Baghouse Outlets

Correcting for Excess Oxygen and Air Leakage

The gaseous pollutants SO_2, CO, NO_x, N_2O, and THC are measured as volume (or molar) concentration in a dried flue gas. Obviously the concentration depends upon any change in the volume of the flue gas due to excess combustion air or air in-leakage. It is common to normalize the measured concentration to a fixed level of excess air - that is, a fixed level of oxygen in the flue gas. It is typical in the U.S. to express the concentration as parts per million (ppmv) at 3% oxygen in the flue gas on a dry basis. The conversion factor is based on the fact that the excess air contains 21% oxygen:

ppmv @ 3% O_2 = ppmv measured * (21 - 3) / (21 - %O_2 measured)

For example, if we measure 100 ppmv CO at 5% O_2 in the flue gas, the value normalized to 3% O_2 is 100 * (18) / (21 - 5) = 112.5 ppmv. Other common bases are 6% O_2 and 15% O_2 - the latter used for gas turbines which operate with high excess air.

It is sometimes useful to relate the emission level to the energy content of the fuel - e.g., the pounds of pollutant emitted per million Btu of fuel heating value fired (lb/MMBtu). The conversion to this unit is a two step process:

3. Normalize the concentration value to zero percent oxygen - stoichiometric combustion with no excess air,
4. Convert to lb/MMBtu using the calculated volume of stoichiometric flue gas generated per MMBtu fired.

The stoichiometric flue gas per MMBtu can be calculated from the fuel analysis or standard values may be used.

The situation with oxygen firing is more complicated. Excess oxygen, which is in the flue gas, may have come from excess oxidant (pure oxygen or a mixture of O_2 and CO_2) or it may have come from air in-leakage. Since the two sources have different oxygen contents, there are two different normalizations needed. It is necessary to know how much of each source there is.

This was done by determining the nitrogen content of the flue gas. In 2004, the N_2 was measured with a gas chromatograph. These results confirmed a good match with nitrogen calculated as %N_2 = 100 - %CO_2 - %O_2, so no gas chromatograph was used in these tests. The fuel burned in O_2/CO_2 with no excess oxidant and no air leakage will have a small expected nitrogen content from the fuel nitrogen. Any additional N_2 in the flue gas is assumed to come from air leakage. Knowing the air leakage and its oxygen content (21%) allows us to determine how much additional oxygen is in the flue gas from excess O_2/CO_2 oxidant.

Table 3.12 includes the conversion to lb/MMBtu for the average of each test condition and the similar conversion for gm/GJ. Per customary usage, MMBtu is based on a higher heating value and GJ on lower heating value.

To compare emission rates with air and oxygen firing, the heat input bases are most useful - lb/MMBtu or g/GJ. This may be especially relevant for non-condensables such as CO and NO_x, which may be vented from the high-CO_2 gas produced. In the case of SO_2, which may be retained in the CO_2 product, the product specification may in fact be in ppmv.

3.5.6 Sulfur Emissions and Backend Capture

The level of sulfur capture and the resultant emissions depend on many factors, including

- **fuel** - sulfur content, ash content, calcium in the ash, and fuel rank/reactivity.
- **sorbent** - feed rate (Ca:S ratio), reactivity, and size.
- **furnace design and operating conditions** - especially temperature, solids inventory, and extent of "air" staging.

The SO_2 emissions seen in the pilot plant or in a commercial unit do respond quickly to changes in any of these parameters. The composition of the furnace solids inventory is also important; this changes much more slowly so it can take many hours to reach a new steady state point after a change. None of the results from these short pilot tests can be assumed to quantitatively apply to long-term commercial operation.

Figure 3.22 shows the ppmv SO_2 into and out of the baghouse, along with the sorbent being fed.

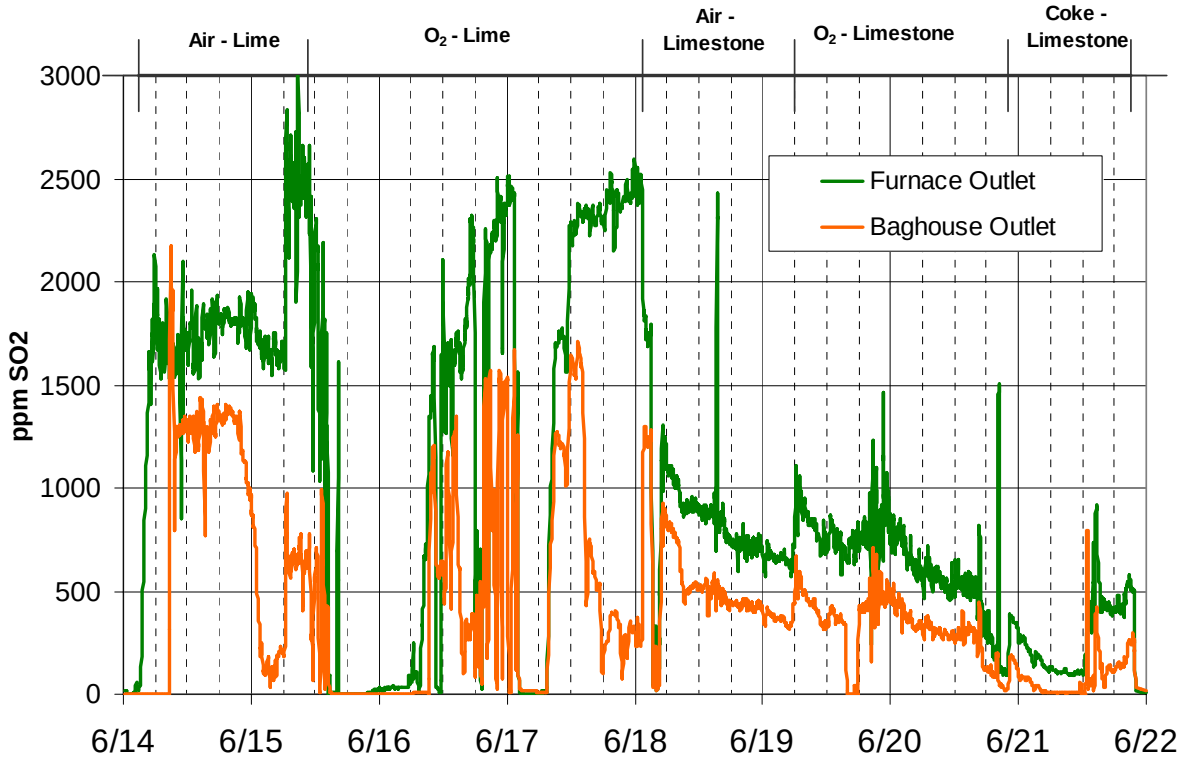

Figure 3.22: SO_2 Emissions in ppmv

As discussed in the preceding section, the ppmv changes when oxygen firing. For example, at 6:00 AM on 6/19 we switched from air to oxy-firing. The ppmv SO_2 jumped up. Not because of more sulfur emitted, but rather because of less dilution (30% O_2 in CO_2 vs 21% O_2 in N_2). Figure 3.23, which shows the emissions in lb/MMBtu, eliminates this effect.

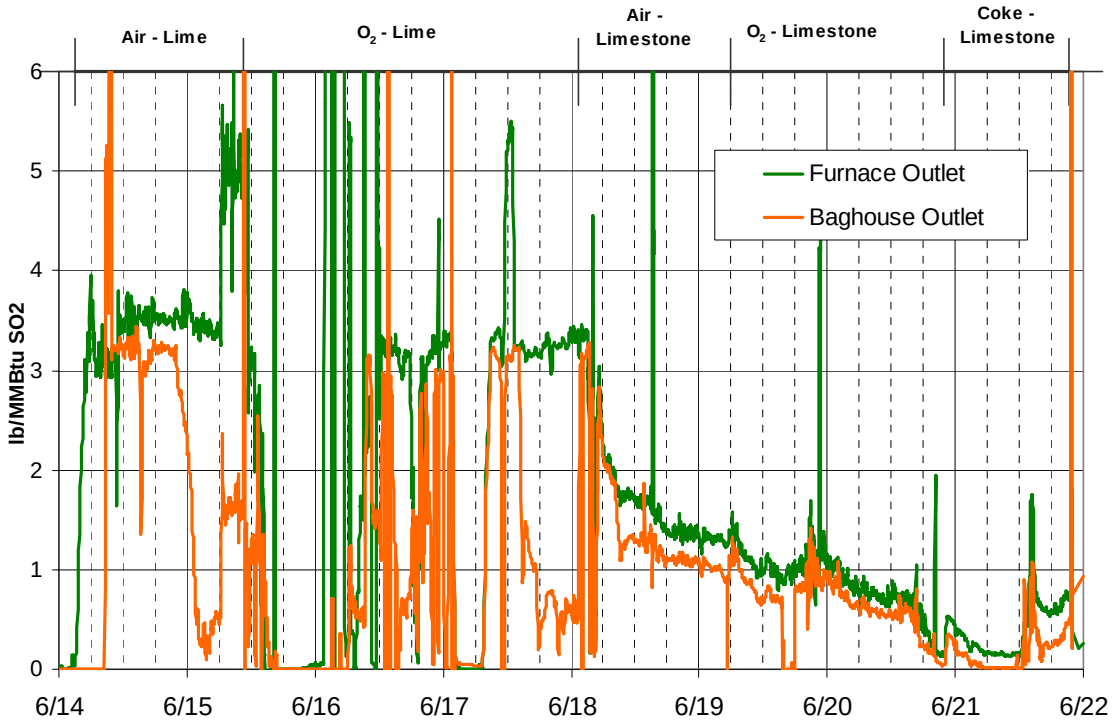

Figure 3.23: SO_2 Emissions in lb/MMBtu

Figure 3.24 gives a summary of the SO_2 emissions from the furnace and the baghouse for each defined test point.

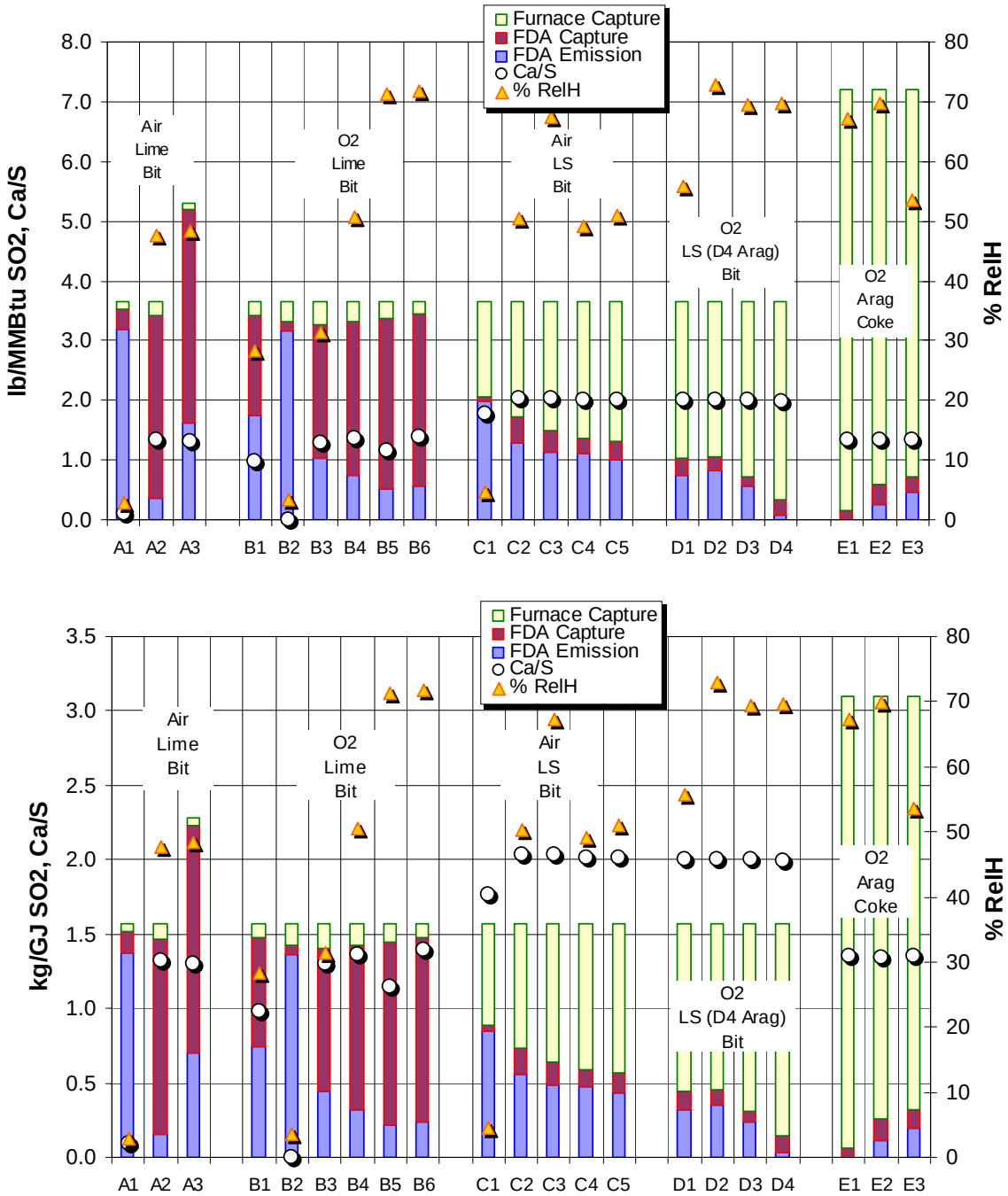

Figure 3.24: Summary of SO_2 Emissions

The overall height of each bar is the uncontrolled SO_2 emissions (based on the sulfur in the fuel). The top, yellow, bar represents the sulfur capture in the furnace; the middle, red, bar is the sulfur capture in the FDA.

Test Points A1-A3 were obtained while firing Tri-Star medium volatile bituminous coal in air. No limestone was fed to the furnace, hydrated lime was injected into the FDA at the Ca/S molar ratios of 1.0 to 1.4. Test Points B1-B6 were obtained similarly to Test

Points A1-A-3, except that the combustion medium was O_2/CO_2, instead of air. The purpose of these two test series was to capture sulfur only in the baghouse/FDA. Results from these two test series indicate the following (see Figure 3.25):

- In-furnace sulfur captures were very low (about 2% to 13%). The inherent Ca/S mole ratio of the bituminous coal is roughly 0.1, which may acccount for some sulfur capture by the coal ash in the furnace.
- In Test Series B, the sulfur capture in the FDA increased as the relative humidity increased from 30 to 50 to 70%.
- Comparing Test Point A2 and B4, which were at approximately the same relative humidity in the FDA, one sees that overall sulfur capture was better for air firing than for O_2/CO_2 firing (90% vs. 80%), respectively. However, increasing the relative humidity from about 50% to 70% yielded sulfur capture of almost 90% for O_2/CO_2 firing.

Test Points C1-C5 were obtained while firing Tri-Star medium volatile bituminous coal in air. ATF40 limestone was injected into the furnace at a Ca/S mole ratio of 1.8-2.0, and the FDA was operated in a classical manner (i.e., water was injected into it to set the relative humidity at a given value). Test Points D1-D3 were obtained similarly to Test Points C1-C5, except that the combustion medium was O_2/CO_2, instead of air. Test Point D4 was run consistent with Test Points D1-D3, but with Aragonite, instead of ATF40 limestone. The purpose of these two test series was to evaluate sulfur capture in-furnace and across the FDA. Figure 3.25 shows:

- In-furnace sulfur capture was better for O_2/CO_2 firing than for air firing. This may be partly due to the lower velocity - thus longer gas residence time - with oxy-firing (see Figure 3.20). It may also be a continuation of the trend of increasing sulfur capture as calcium accumulates in the bed inventory.
- Sulfur capture across the baghouse/FDA for O_2/CO_2 firing was similar to that for air firing. Because of the better capture in the furnace, the SO_2 concentration entering the baghouse was lower with oxy-firing. The percentage reduction across the baghouse was similar (Figure 3.25), though the absolute sulfur retention was lower with oxy-firing.
- With either air or oxygen firing, the sulfur capture in the FDA with limestone did not appear to be higher at 70 % relative humidity compared to 50%.
- Because of the increased capture in the furnace, overall sulfur capture was better for O_2/CO_2 firing that for air firing.
- Over 95% overall sulfur capture was achieved with the more reactive Aragonite.

Test Points E1-E3 were obtained while firing the petcoke in O_2/CO_2. Aragonite was injected into the furnace at a Ca/S mole ratio of 2 and 1.4. Overall sulfur capture was better than for bituminous coal firing under similar circumstances: the capture was 94% and 97-100% at relative humidities of 50% and 70%, respectively.

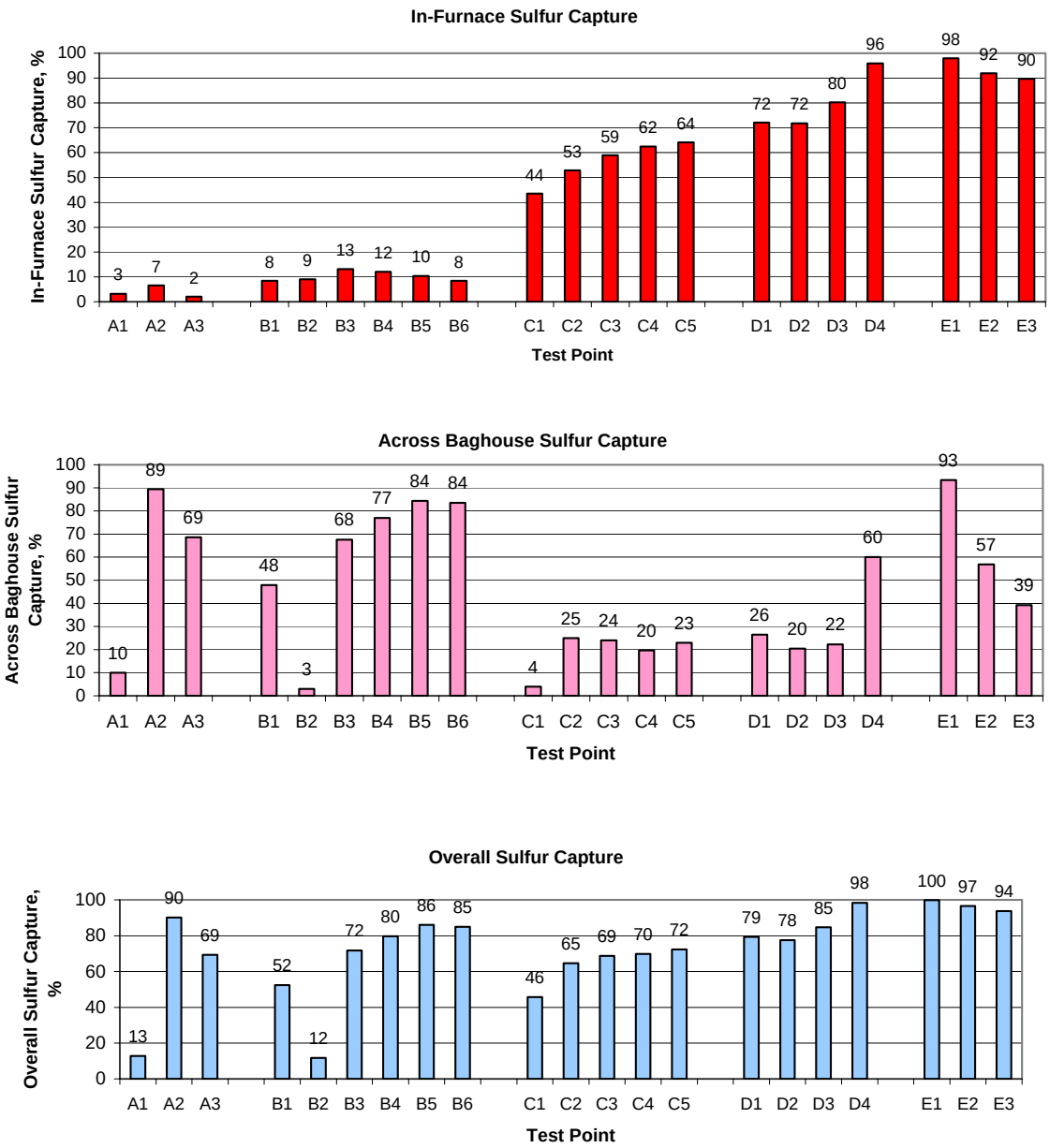

Figure 3.25: Percent Sulfur Capture Data

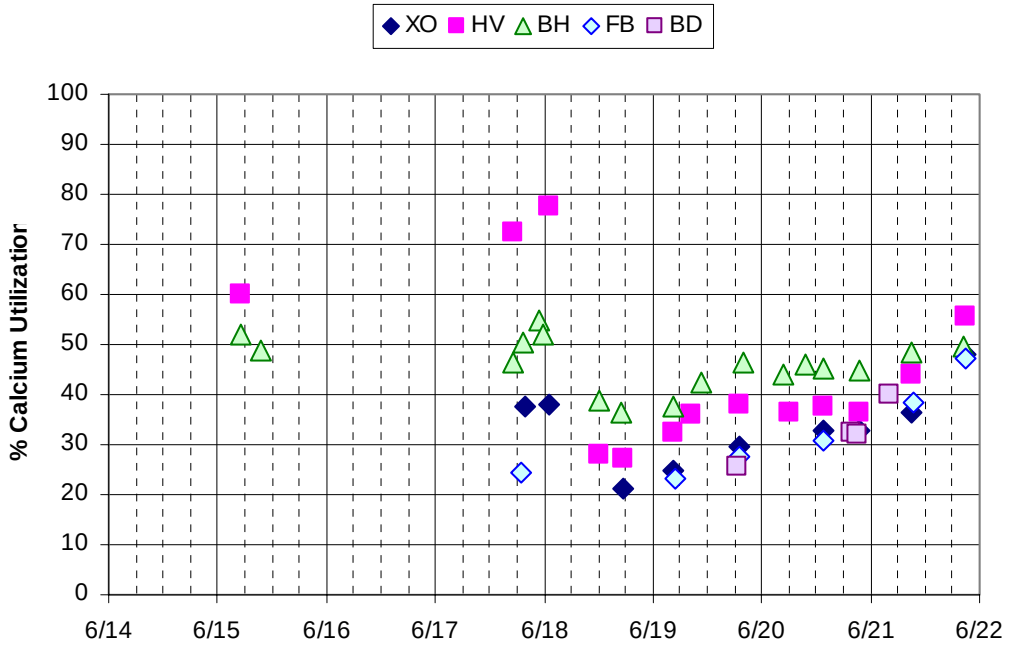

Figure 3.26: Calcium Utilization of Ash Samples

The calcium utilization of selected ash samples is shown in Figure 3.26.

Prior to about 3:00 AM on 6/18 there was no limestone to the furnace, so utilization of the samples taken at the cyclone outlet (HV), the cyclone inlet (XO) and fluid bed heat exchanger (FB) is based only on the small amount of inherent calcium in the coal ash. The calcium in the lime fed to the baghouse was about 50% utilized, with both air firing (6/15) and oxygen firing (6/17-18).

Once limestone was fed to the furnace, the utilization of the baghouse ash is greater than the ash entering the baghouse. This is expected - the FDA is making use of calcium in the fly ash. The exception is the last point in the utilization chart. When we switched to pet coke at 23:00 on 6/20, the utilization in the furnace went up. This shows up quickly in the high volume ash. The FDA still captures additional sulfur (see Figure 3.24), but the baghouse drain sample utilization lags behind because of the large inventory of baghouse ash.

3.5.7 Recarbonation

Many of the solids samples from the pilot tests were analyzed for CO_2, which is assumed to have been present as $CaCO_3$. The amount of calcium carbonate as a percentage of the total calcium in each sample is shown as % Recarbonation in Table 3.9 and Table 3.10. This is shown in Figure 3.27. The crossover (XO) and fluid bed heat exchanger (FB) samples are circulating material, which stays in the furnace generally above the calcination temperature; they have a low level of carbonate in the ash. The bed drain material (BD) has a higher level of recarbonation. This is likely due to some of the limestone feed being drained from the bottom of the furnace before it has a chance to completely calcine.

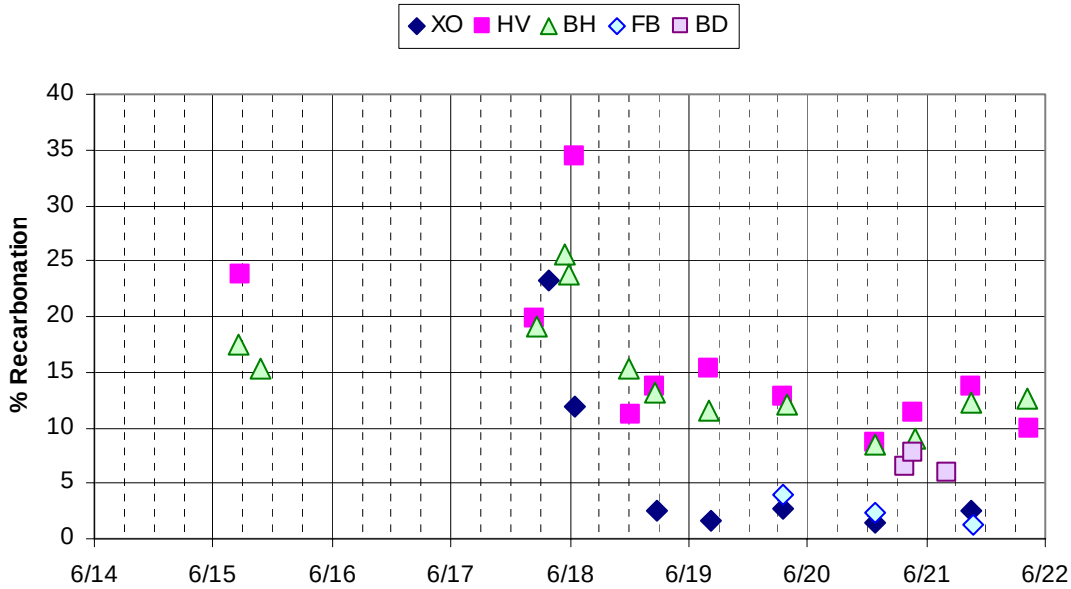

Figure 3.27: Recarbonation of Solids Samples

The high volume fly ash samples (HV) were taken at a point where the flue gas had cooled to below the calcination temperature - generally 540-600°C (1000 to 1100°F). These samples show a higher level of recarbonation. Fly ash samples taken from the baghouse have similar levels of recarbonation during the second part of the test week with limestone fed to the furnace. This implies that no further recarbonation is taking place in the baghouse. That is, CO_2 is not competing with SO_2 for reacting with calcium in the FDA system.

Earlier in the week with lime fed to the baghouse, this lime had a higher level of recarbonation. According to the feed analysis (Table 3.5), the hydrated lime has about 10% carbonation expressed a percent of total calcium. So an additional 5 to 15% of the calcium is recarbonated in the baghouse. With lime, there does seem to be the potential for CO_2 competing with SO_2 for the calcium in the FDA system.

It should be noted that recarbonation of the fly ash is possible in air-fired boilers as well, where recarbonation levels of up to 10% have been seen.

3.5.8 NO_x Emissions

Typical NO_x emissions from air-fired tests in the MTF pilot plant are in the range of 30 to 65 g/GJ (0.07 to 0.15 lb/MMBtu) fired. Results from air firing and O_2/CO_2 firing were as follows (see Figure 3.28):

- During Tri-Star medium volatile bituminous coal firing in air, without injecting limestone into the furnace (Test Point Series A): 43-52 g/GJ (0.1-0.12 lb/MMBtu)
- During Tri-Star medium volatile bituminous coal firing in O_2 / CO_2, without injecting limestone into the furnace (Test Point Series B): 6-12 g/GJ (0.014-0.028 lb/MMBtu)
- During Tri-Star medium volatile bituminous coal firing in air, while injecting

limestone into the furnace (Test Point Series C): 64-95 g/GJ (0.15-0.22 lb/MMBtu)

- During Tri-Star medium volatile bituminous coal firing in O_2 / CO_2, while injecting limestone into the furnace (Test Point Series D): 11-39 g/GJ (0.026-0.091 lb/MMBtu)
- During petcoke firing in O_2 / CO_2, while injecting limestone into the furnace (Test Point Series E): 9-47 g/GJ (0.022-0.11 lb/MMBtu)

These results underscore important information, namely:

- NO_x emissions under oxygen firing were consistently more than 60% lower than during air firing of the bituminous coal
- NO_x emissions under either air firing or oxygen firing were higher while injecting limestone into the furnace than while not injecting limestone into the furnace. This is due to the known catalytic effect of calcined limestone on NO_x emissions.

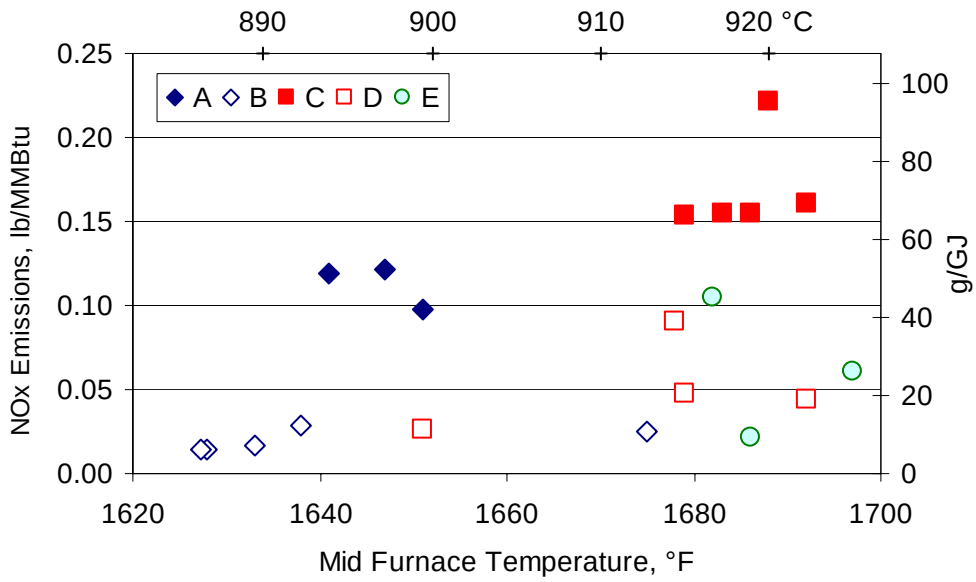

Figure 3.28: NO_x Emissions vs. Mid Furnace Temperature

SNCR with Ammonia Addition

Although the NO_x emissions are low with O_2 firing, we did two tests with ammonia injection into the furnace outlet.

The first test was the morning of June 20 firing Tri-Star mvb coal (Figure 3.29). Before injecting ammonia, the NO_x level was about 50 ppmv (0.05 lb/MMBtu). At this low NO_x level, the lowest ammonia feed rate we could get was an NSR of about 3. (NSR is the normal stoichiometric ratio of ammonia to NOx.) Over the course of three hours, the ammonia feed was increased to as high as NSR of 14. The NO_x dropped by about 40% to 30 ppmv. The NSR of 14 is much higher than typically used commercially and may have led to high ammonia slip (which was not measured at the MTF).

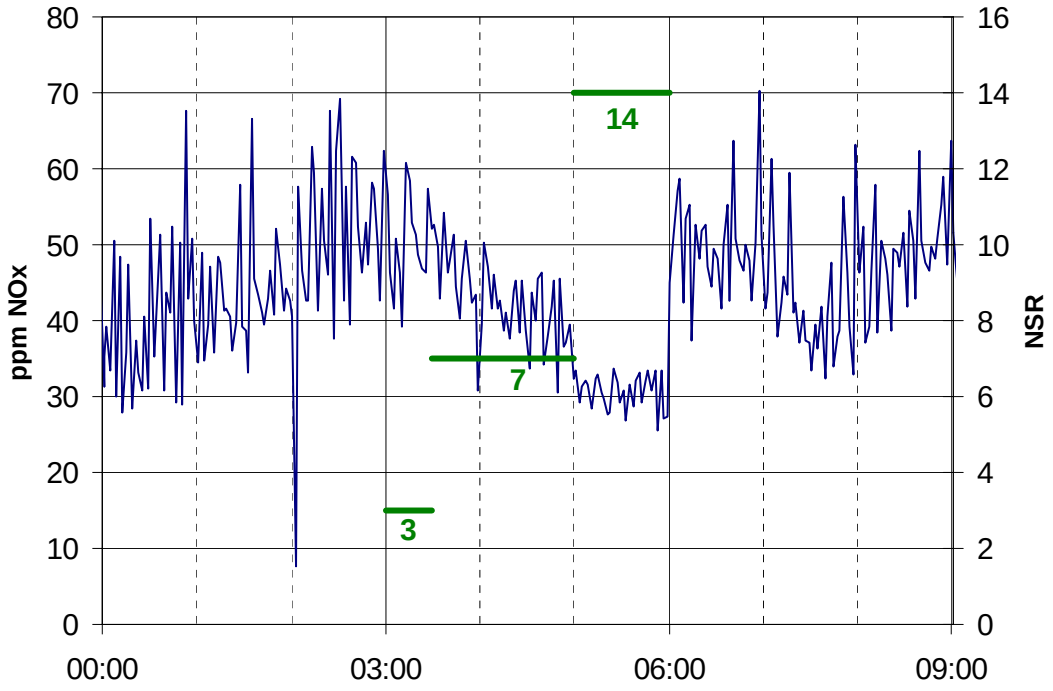

Figure 3.29: SNCR test with Bituminous and Oxygen Firing

The second test was early in the pet coke firing when the NO_x level was about 100 ppmv (0.1 lb/MMBtu). With this higher baseline NO_x, a reduction of about 50% was achieved at an NSR of 3.4 (Figure 3.30).

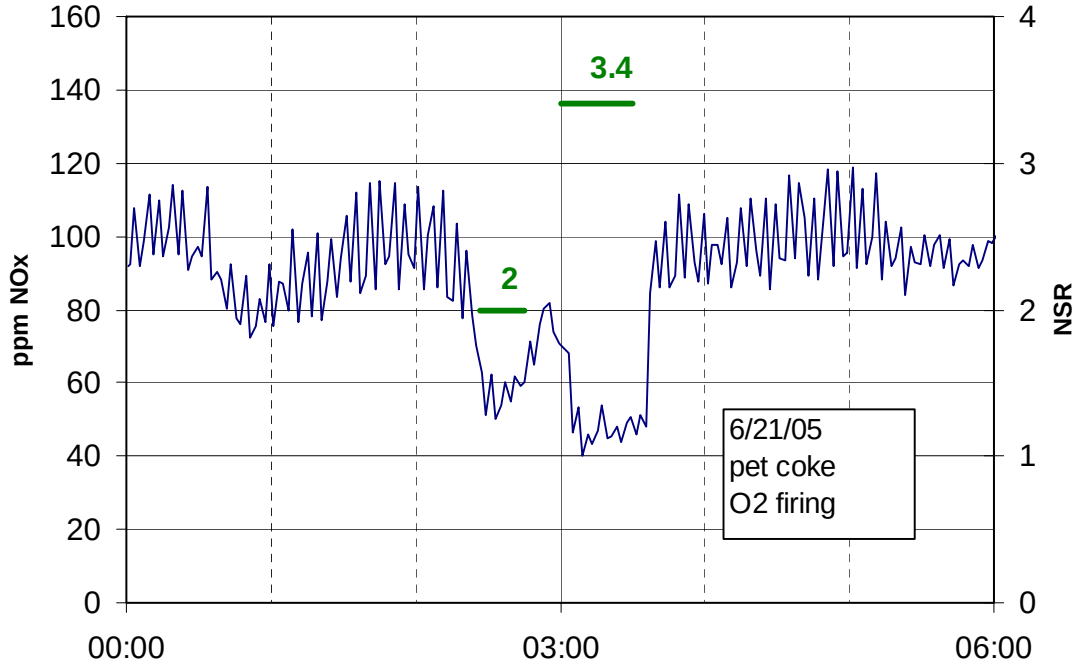

Figure 3.30: SNCR Test with Pet Coke and Oxygen Firing

These results indicate that ammonia injection into the top of the furnace can achieve NO_x reductions in the high CO_2 environment. When the base emissions are already low, high ammonia flows may be needed to obtain meaningful reductions. Ammonia slip will be a concern - this was not measured. SNCR may be more useful with somewhat higher base emissions.

3.5.9 CO Emissions

Carbon monoxide emissions depend strongly on fuel type and on furnace temperature. A medium volatile coal like the Tri-Star would typically be expected to have a CO emission rate of less than 43 g/GJ (0.1 lb/MMBtu). Petroleum coke generally has lower CO emissions than coal.

CO results from air firing and O_2/CO_2 firing in the present study were as follows (see Figure 3.31):

- During Tri-Star medium volatile bituminous coal firing in air, without injecting limestone into the furnace (Test Point Series A): 26-35 g/GJ (0.061-0.081 lb/MMBtu)
- During Tri-Star medium volatile bituminous coal firing in O_2/CO_2, without injecting limestone into the furnace (Test Point Series B): 39-47 g/GJ (0.09-0.11 lb/MMBtu)
- During Tri-Star medium volatile bituminous coal firing in air, while injecting limestone into the furnace (Test Point Series C): 24-29 g/GJ (0.055-0.067 lb/MMBtu)
- During Tri-Star medium volatile bituminous coal firing in O_2/CO_2, while injecting limestone into the furnace (Test Point Series D): 29-35 g/GJ (00.067-.081 lb/MMBtu)
- During petcoke firing in O_2/CO_2, while injecting limestone into the furnace (Test Point Series E): 0-15 g/GJ (0.0-0.036 lb/MMBtu)

These results underscore important information, namely:

- CO emissions under oxygen firing were 25 to 45% higher during oxygen firing than during air firing of the bituminous coal. This is believed to be due to the high CO_2 partial pressure (i.e., the reaction $CO + O_2 \rightarrow CO_2$ is suppressed).

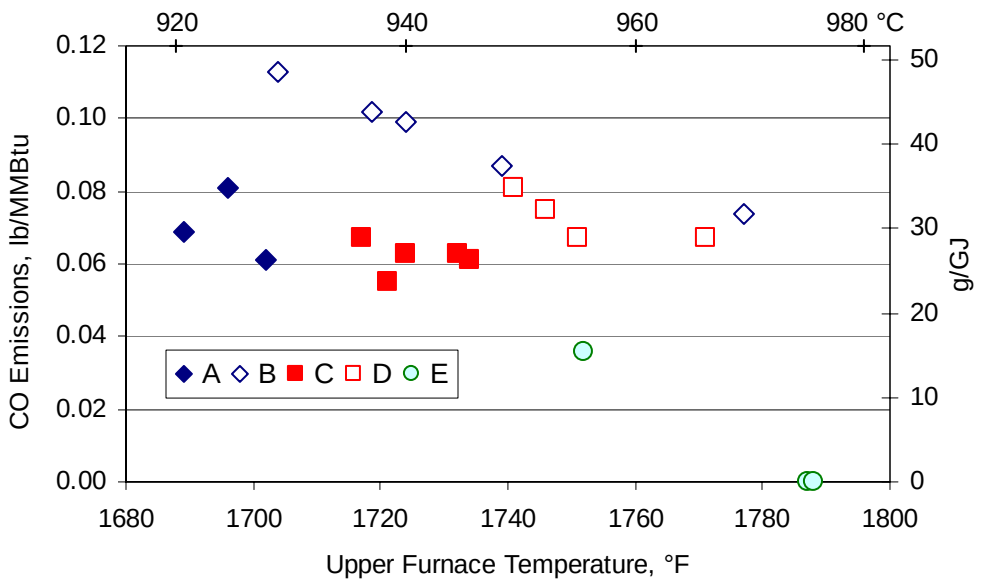

Figure 3.31: CO Emissions vs. Upper Furnace Temperature

3.5.10 N_2O Emissions

Nitrous oxide (N_2O) is a greenhouse gas which is currently not regulated. Although N_2O is released in much smaller quantities than CO_2, it is a more potent greenhouse gas. N_2O has roughly 300 times the global warming potential (GWP) of an equal mass of CO_2.

N_2O emissions are strongly dependent on temperature. Pulverized coal furnaces usually have well less than 4 g/GJ (10 ppmv) N_2O (normalized to 3% O_2). Fluid bed combustors, which operate much cooler, typically have from 18 to 36 g/GJ (50 to 100 ppmv) (@3% O_2).

In previous MTF tests, ALSTOM has seen from 25 to 36 g/GJ (70 to 100 ppmv) @3% O_2 when the upper furnace temperature is about 900 °C (1650 °F). This range is equal to about 43 to 56 g/GJ (0.1 to 0.13 lb/MMBtu). The emissions in this study were generally lower (see Figure 3.32):

N_2O results from air firing and O_2/CO_2 firing in the present study were as follows (see Figure 3-30):

- During Tri-Star medium volatile bituminous coal firing in air, without injecting limestone into the furnace (Test Point Series A): 22-29 g/GJ (.051-.068 lb/MMBtu)
- During Tri-Star medium volatile bituminous coal firing in O_2/CO_2, without injecting limestone into the furnace (Test Point Series B): 0.5-11 g/GJ (0.001-.026 lb/MMBtu)
- During Tri-Star medium volatile bituminous coal firing in air, while injecting limestone into the furnace (Test Point Series C): 19-32 g/GJ (0.045-0.075 lb/MMBtu)
- During Tri-Star medium volatile bituminous coal firing in O_2/CO_2, while injecting

limestone into the furnace (Test Point Series D): 0-9 g/GJ (00.0-0.022 lb/MMBtu)

- During petcoke firing in O_2/CO_2, while injecting limestone into the furnace (Test Point Series E): 0-7 g/GJ (0.0-0.017 lb/MMBtu)

In conclusion, N_2O emissions were lower for O_2 firing than for air firng.

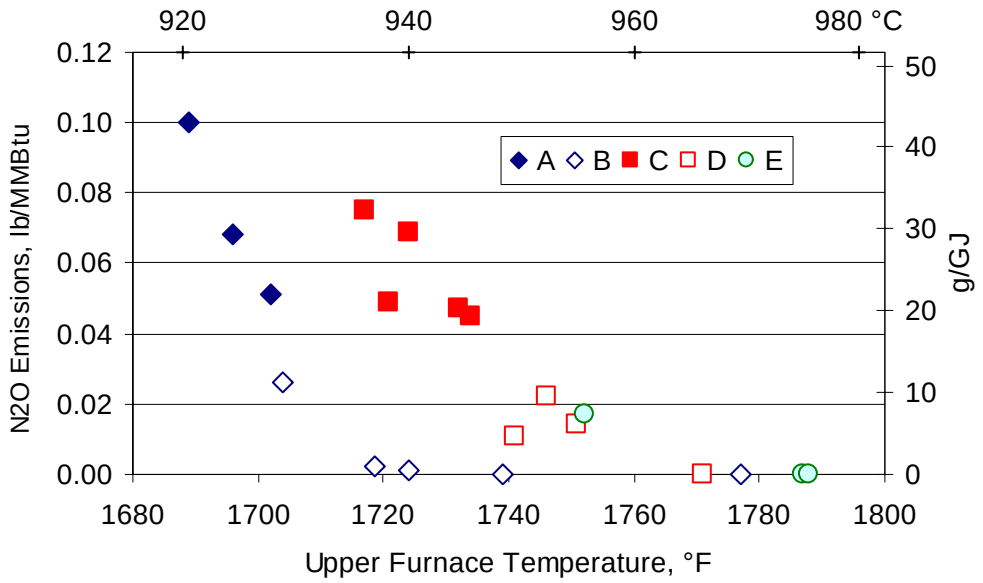

Figure 3.32: N_2O Emissions vs. Upper Furnace Temperature

3.5.11 VOC Emissions

VOC results, expressed as total hydrocarbon (as methane) from air firing and O_2/CO_2 firing in the present study were as follows (see Figure 3.33):

- During Tri-Star medium volatile bituminous coal firing in air, without injecting limestone into the furnace (Test Point Series A): 0.5-1.5 g/GJ (0.0012-.0035 lb/MM Btu)
- During Tri-Star medium volatile bituminous coal firing in O_2/CO_2, without injecting limestone into the furnace (Test Point Series B): <0.5 g/GJ (0.0004-0.0006 lb/MMBtu)
- During Tri-Star medium volatile bituminous coal firing in air, while injecting limestone into the furnace (Test Point Series C): <0.5 g/GJ (0.0005-0.0011 lb/MMBtu)
- During Tri-Star medium volatile bituminous coal firing in O_2/CO_2, while injecting limestone into the furnace (Test Point Series D): <0.5 g/GJ (0.0004-0.0006 lb/MMBtu)
- During petcoke firing in O_2/CO_2, while injecting limestone into the furnace (Test Point Series E): < 0.5 g/GJ (.0004-0.0007 lb/MMBtu).

These results indicate that the VOC emissions during both air and O_2/CO_2 firing of the Tri-Star mvb coal and O_2/CO_2 firing of the petcoke were negligibly small.

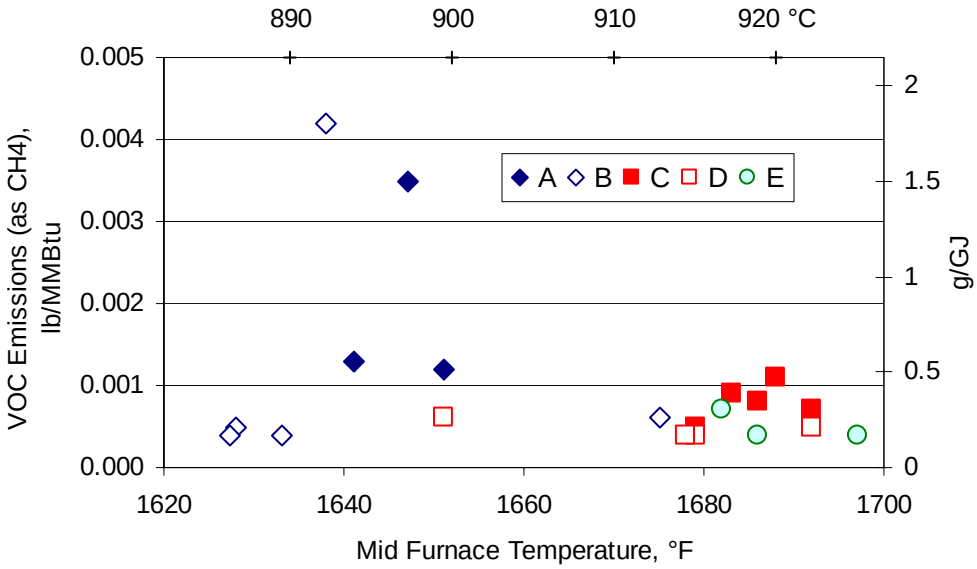

Figure 3.33: VOC vs. Mid Furnace Temperature

3.5.12 Combustion Efficiencies/Unburned Carbon (UBC) Emissions

The ash which results from the CFB combustion process usually contains some unburned carbon. This unburned carbon represents a heat loss, expressed as Carbon Heat Loss (CHL) which is the heating value of the unburned carbon as a percentage of the heating value of the parent fuel. Typical values for commercial CFB's are in the range of 1 to 2% of the heat input lost as unburned carbon. High and low reactivity fuels can deviate significantly from this range. Furnace temperature, excess air level, and cyclone capture efficiency also have large impacts on CHL.

The two main ash streams from the combustor are the bed drain and the fly ash, each of which contain some unburned carbon. The CHL in the fly ash is usually much larger than that in the bed drain.

The CHL in the fly ash is calculated by

CHL = UBC * Flow * 14,500 / Q (percent of coal HHV)

Where:

UBC = % unburned carbon in the fly ash

Flow = fly ash flow rate, (lb/hr)

14,500 = the heating value of the unburned carbon, (Btu/lb)

Q = fuel firing rate, (Btu/hr - HHV)

The estimated values of carbon heat loss are given in Table 3.13 and Figure 3.34 for each of the fly ash and bed drain samples analyzed. The total carbon in the ash is corrected by

deducting the carbon analyzed as CO_2; this gives the unburned carbon. For several of the samples, the CO_2 was not analyzed (note in Table 3.9 and Table 3.10). In these cases we estimated the CO_2 correction to get the unburned carbon in Table 3.13. The fly ash flow rate was estimated by the High Volume sample readings (see Section 3.2.1) and the baghouse drain rate. The bed drain flow rate was estimated from the rate of filling the drums.

Table 3.13: Carbon Heat Loss in the Fly Ash

Test Point	Sample Location	Date Time	Unburned Carbon in Fly Ash	Ash flow		Carbon Flow		Heat Loss		Fuel firing Rate		Carbon Heat Loss (CHL) in Fly Ash
			%	kg/hr	lb/hr	kg/hr	lb/hr	MWth	MMBtu/hr	MWth	MMBtu/hr	%
A2	hv	6/15/2005 5:20	17.59	91	200	16.0	35.2	0.1495	0.510	2.8	9.6	5.31
B3	hv	6/17/2005 17:00	21.35	68	150	14.5	32.0	0.1361	0.464	2.8	9.7	4.79
B6	hv	6/18/2005 1:10	19.68	54	120	10.7	23.6	0.1003	0.342	2.8	9.7	3.53
C2	hv	6/18/2005 12:15	11.66	136	300	15.9	35.0	0.1486	0.507	2.8	9.6	5.28
C3	hv	6/18/2005 17:20	11.09	113	250	12.6	27.7	0.1178	0.402	2.8	9.6	4.19
	hv	6/19/2005 4:15	15.13	68	150	10.3	22.7	0.0964	0.329	2.2	7.6	4.33
	hv	6/19/2005 8:30	19.29*	54	120	10.5	23.1	0.0983	0.336	2.8	9.7	3.46
D2	hv	6/19/2005 19:00	16.25	91	200	14.7	32.5	0.1381	0.471	2.8	9.7	4.86
	hv	6/20/2005 6:10	12.69*	82	180	10.4	22.8	0.0970	0.331	2.8	9.7	3.41
D3	hv	6/20/2005 13:30	13.82	91	200	12.5	27.6	0.1174	0.401	2.8	9.7	4.13
D4	hv	6/20/2005 21:20	13.18	91	200	12.0	26.4	0.1120	0.382	2.8	9.7	3.94
E1	hv	6/21/2005 9:10	7.82	23	50	1.8	3.9	0.0166	0.057	2.9	10	0.57
E3	hv	6/21/2005 20:45	21.4	23	50	4.9	10.7	0.0455	0.155	2.9	10	1.55
A2	bh	6/15/2005 5:00	15.85	91	200	14.4	31.7	0.1347	0.460	2.8	9.6	4.79
A3	bh	6/15/2005 9:43	15.76	91	200	14.3	31.5	0.1339	0.457	2.8	9.7	4.71
B3	bh	6/17/2005 17:19	15.37	68	150	10.5	23.1	0.0979	0.334	2.8	9.7	3.45
B4	bh	6/17/2005 19:34	15.25*	68	150	10.4	22.9	0.0972	0.332	2.8	9.7	3.42
B5	bh	6/17/2005 22:55	14.15	68	150	9.6	21.2	0.0902	0.308	2.8	9.7	3.17
B6	bh	6/17/2005 23:55	14.02	68	150	9.5	21.0	0.0893	0.305	2.8	9.7	3.14
C2	bh	6/18/2005 12:05	10.68	136	300	14.5	32.0	0.1361	0.465	2.8	9.6	4.84
C3	bh	6/18/2005 17:06	11.37	113	250	12.9	28.4	0.1208	0.412	2.8	9.6	4.29
C5	bh	6/19/2005 4:15	11.04	68	150	7.5	16.6	0.0704	0.240	2.2	7.6	3.16
D1	bh	6/19/2005 10:30	16.26*	54	120	8.9	19.5	0.0829	0.283	2.8	9.7	2.92
D2	bh	6/19/2005 19:43	15.72	91	200	14.3	31.4	0.1336	0.456	2.8	9.7	4.70
	bh	6/20/2005 4:50	13.99*	82	180	11.4	25.2	0.1070	0.365	2.8	9.7	3.76
D3	bh	6/20/2005 9:34	14.11*	91	200	12.8	28.2	0.1199	0.409	2.8	9.7	4.22
D3	bh	6/20/2005 13:45	13.5	91	200	12.2	27.0	0.1147	0.392	2.8	9.7	4.04
D4	bh	6/20/2005 21:40	13.01	91	200	11.8	26.0	0.1105	0.377	2.8	9.7	3.89
E1	bh	6/21/2005 9:10	8.02	23	50	1.8	4.0	0.0170	0.058	2.9	10	0.58
	bh	6/21/2005 20:30	6.59	23	50	1.5	3.3	0.0140	0.048	2.9	10	0.48
D2	bd	6/19/2005 18:30	0.47*	68	150	0.3	0.7	0.0030	0.010	2.8	9.7	0.11
	bd	6/20/2005 19:43	0.08	54	120	0.0	0.1	0.0004	0.001	2.8	9.7	0.01
D4	bd	6/20/2005 21:15	0.37	54	120	0.2	0.4	0.0019	0.006	2.8	9.7	0.07
	bd	6/21/2005 4:10	1.41	45	100	0.6	1.4	0.0060	0.020	2.9	10	0.20

* correction for C as CO_2 was estimated rather than measured in these samples

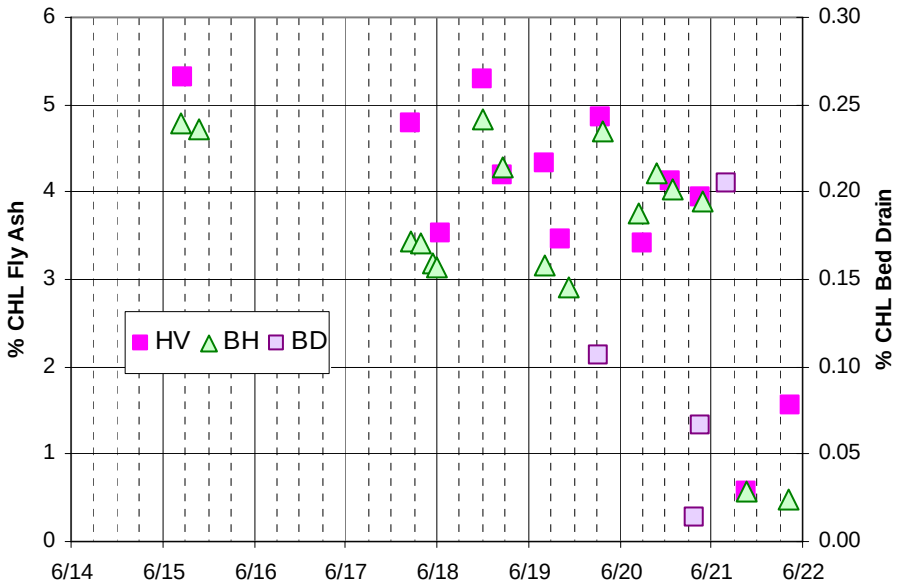

Figure 3.34: Carbon Heat Loss

The carbon heat loss in the fly ash is 3 – 5 % of the higher heating value heat input for the bituminous coal. The heat loss in the fly ash seems to be lower with oxygen firing compared to air firing. The carbon heat loss is much lower with the pet coke, which is typical. The carbon heat loss in the bed drain is less than 1/4%.

3.5.13 Mercury and Other Trace Metals

TRC Environmental Corporation (TRC) conducted emissions sampling for particulate matter (EPA Method 5) and Metals (EPA Method 29). Tests were done at three test conditions:

- C4 - Air Fired, TriStar Bituminous, ATF40 limestone
- D3 - O_2 Fired, TriStar Bituminous, ATF40 limestone
- E1 - O_2 Fired, Pet Coke, Aragonite

At each test condition, TRC took duplicate samples at the furnace outlet and at the baghouse outlet. TRC's results for particulate load and for 15 metals are given in Table 3.14. A summary of the fate of 5 metals is shown in Figure 3.35. The drop in metals emissions across the baghouse ("out" vs. "in") is greater for the two oxygen fired cases. However, both air-fired tests had a greater dust load out of the baghouse (see Table 3.14), perhaps due to a filter bag not seated well.

Figure 3.36 expresses the emission rate as parts per million (by mass) relative to the measured dust flow rates.

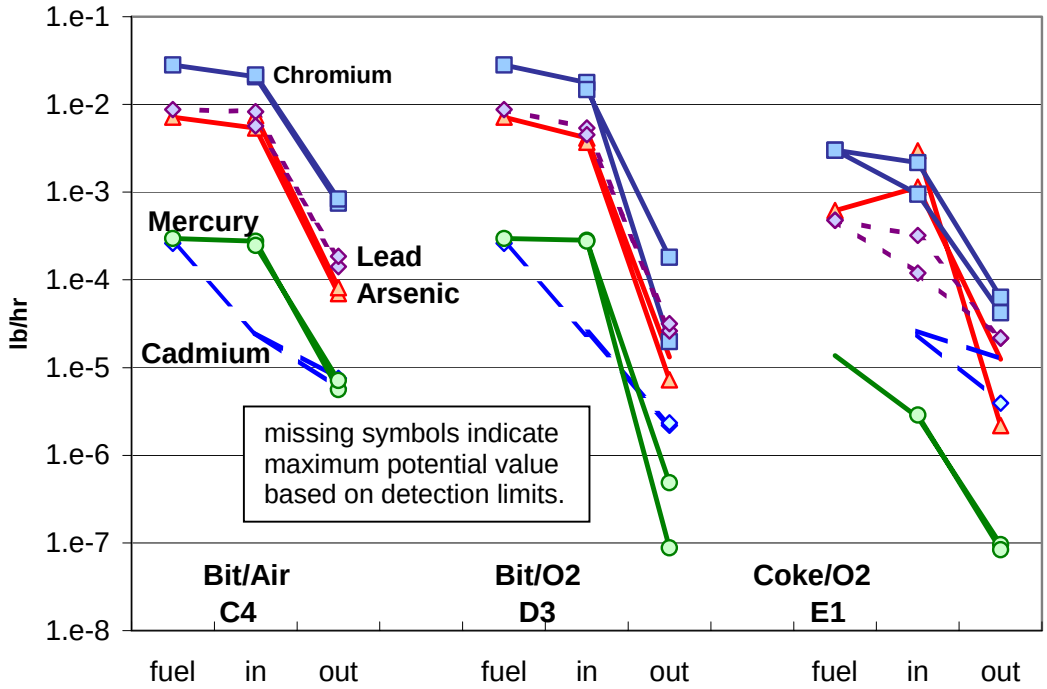

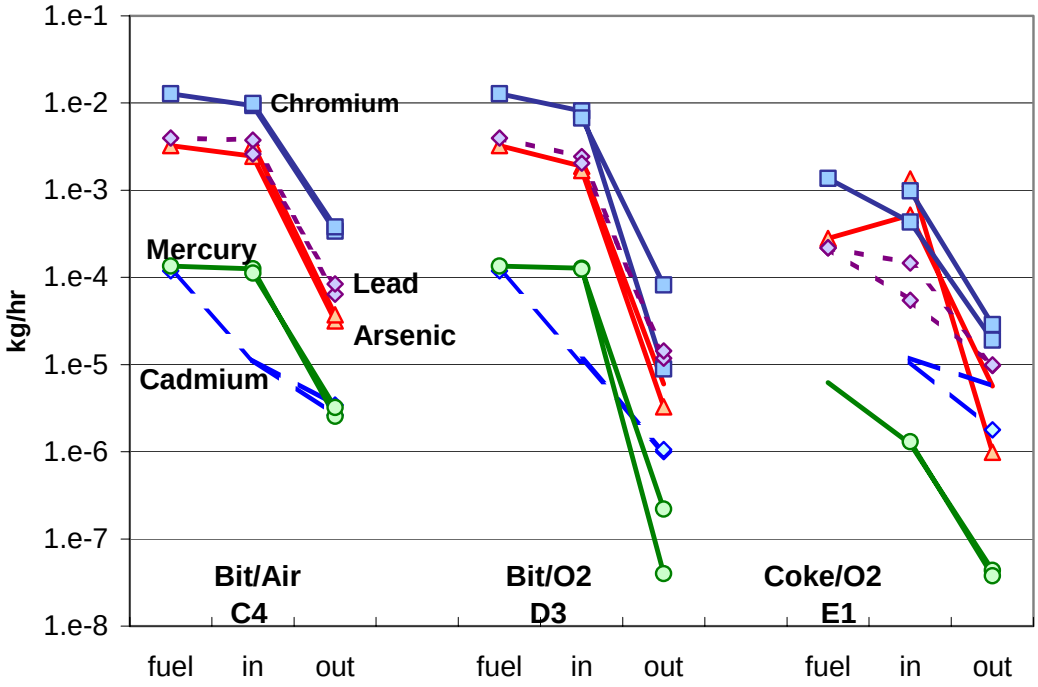

Figure 3.35: Tracking of Five Metals

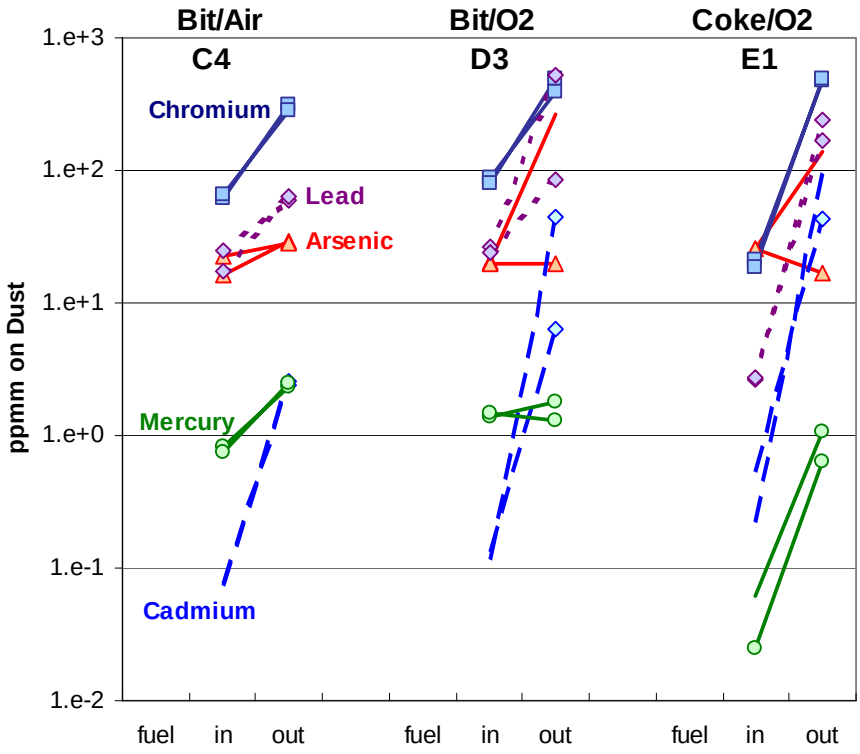

Figure 3.36: Calculated Metals Concentration on Dust

Table 3.14: Metals Data

DATE		6/18/05	6/18/05		6/18/05	6/18/05		6/20/05	6/20/05		6/20/05	6/20/05		6/21/05	6/21/05		6/21/05	6/21/05	
TIME		18:20 - 20:25	20:50 - 22:56	Average	18:20 - 20:25	20:50 - 22:56	Average	08:25 - 10:27	11:20 - 13:23	Average	08:25 - 10:27	11:20 - 13:23	Average	07:05- 09:08	09:45- 11:50	Average	07:05- 09:08	09:45- 11:50	Average
Location		Furnace Outlet			Baghouse Outlet			Furnace Outlet			Baghouse Outlet			Furnace Outlet			Baghouse Outlet		
Temperature	°F	1041	1033	1037	128	128	128	1093	1089	1091	117	121	119	1048	1073	1061	126	126	126
CO2	%	15	15	15	15	15	15	85	85	85	85	85	85	85	85	85	85	85	85
O2	%	3	3	3	3	3	3	4.5	4.5	4.5	4.5	4.5	4.5	4	4	4	4	4	4
Moisture	%	7.6	7.3	7.5	10.3	9.7	10.0	10.8	9.7	10.2	10.7	11.0	10.8	4.3	11.7	8.0	11.4	11.6	11.5
Volumetric Flowrate, Actual	acfm[1]	7247	7205	7226	3614	3624	3619	5211	5312	5261	2508	2845	2676	5117	5369	5243	2842	2917	2880
Volumetric Flowrate, Dry Std.	dscfm[2]	2352	2355	2353	2813	2843	2828	1577	1633	1605	2047	2298	2172	1706	1626	1666	2258	2312	2285
Volumetric Flowrate, Dry Std.	dscm/hr	3996	4001	3999	4780	4831	4805	2680	2775	2728	3478	3904	3691	2898	2763	2830	3836	3929	3883
Sample Catch																			
Particulate (total)	mg	39829	39483		321.30	384.10		25372	22230		10.30	84.30		5625	13346		20.60	31.40	
Ag - silver	ug	358	< 3.00		7.41	31.19		< 3.00	< 3.00		4.40	9.03		< 3.00	< 3.00		6.49	1.13	
As -arsenic	ug	642	887		9.16	10.79		517	437		< 3.00	1.64		143	340		< 3.00	0.52	
Ba -barium	ug	13400	11640		244.24	305.00		12040	9211		10.40	45.60		276	523		13.10	9.05	
Be - beryllium	ug	198	129		4.62	5.97		197	159		< 1.80	< 1.80		< 1.80	2.02		< 1.80	< 1.80	
Cd - cadmium	ug	< 3.00	< 3.00		0.76	1.00		< 3.00	< 3.00		0.50	0.53		< 3.00	< 3.00		0.94	< 3.00	
Cr -chromium	ug	2453	2588		98.00	110.00		2226	1749		4.48	40.90		119	248		10.10	15.10	
Fe - iron	ug	1279061	1320019		18624.0	21054.2		1529044	1194022		629.40	16162.30		21490	46738		2307.60	8256.20	
Hg - mercury	ug	32.86	29.51		0.74	0.94		35.18	32.49		0.02	0.11		< 0.34	0.33		0.02	0.02	
Ni - nickel	ug	1877	1788		57.28	63.30		1575	1335		6.28	27.50		2701	9493		12.10	20.40	
Pb - lead	ug	986	681		18.62	24.55		670	533		5.91	7.15		15.07	36.80		5.16	5.22	
Sb - antimony	ug	37.30	117		3.05	3.23		73.75	68.80		< 3.00	1.38		5.83	< 3.00		< 3.00	< 3.00	
Sr - strontium	ug	10600	9774		200.32	236.00		9028	6971		7.81	27.40		3200	9388		0.76	6.18	
Ti - titanium	ug	120000	119000		2344.90	2710.00		99500	77900		57.70	185.00		8926	18300		39.50	25.80	
Tl - thallium	ug	< 3.00	< 3.00		< 3.00	< 3.00		< 3.00	< 3.00		< 3.00	< 3.00		< 3.00	< 3.00		< 5.00	< 5.00	
V- vanadium	ug	4264	4899		93.36	107.00		4058	3362		3.20	7.92		5752	19550		7.64	2.91	
Sample Volume	dscm	1.050	1.052		1.388	1.406		0.737	0.722		1.739	1.949		0.800	0.697		2.028	2.072	
Isokinetic Ratio	%	98.3	98.4		108.7	108.9		102.9	97.4		102.5	102.3		103.3	94.4		108.3	108.1	
CONCENTRATION																			
Particulate (total)	mg/dscm	37925	37527	37726	231.41	273.20	252.30	34421.77	30778.26	32600.02	5.92	43.26	24.59	7033.33	19155.19	13094.26	10.16	15.16	12.66
Ag - silver	ug/dscm	340.88	< 2.85	< 171.87	5.34	22.18	13.76	< 4.07	< 4.15	< 4.11	2.53	4.63	3.58	< 3.75	< 4.31	< 4.03	3.20	0.55	1.87
As -arsenic	ug/dscm	611.31	843.07	727.19	6.60	7.67	7.14	701.40	605.05	653.23	< 1.72	0.84	< 1.28	178.81	487.99	333.40	< 1.48	0.25	< 0.86
Ba -barium	ug/dscm	12759.38	11063.57	11911.47	175.91	216.94	196.42	16334.41	12753.14	14543.77	5.98	23.40	14.69	345.11	750.64	547.88	6.46	4.37	5.41
Be - beryllium	ug/dscm	188.53	122.61	155.57	3.33	4.25	3.79	267.27	220.14	243.70	< 1.03	< 0.92	< 0.98	< 2.25	2.90	< 2.57	< 0.89	< 0.87	< 0.88
Cd - cadmium	ug/dscm	< 2.86	< 2.85	< 2.85	0.55	0.71	0.63	< 4.07	< 4.15	< 4.11	0.29	0.27	0.28	< 3.75	< 4.31	< 4.03	0.46	< 1.45	< 0.96
Cr -chromium	ug/dscm	2335.73	2459.84	2397.78	70.58	78.24	74.41	3019.97	2421.59	2720.78	2.58	20.99	11.78	148.80	355.94	252.37	4.98	7.29	6.13
Fe - iron	ug/dscm	1217912	1254650	1236281	13413.61	14975.20	14194.40	2074420	1653190	1863805	362	8293	4328	26872	67081	46976	1138	3985	2562
Hg - mercury	ug/dscm	31.29	28.05	29.67	0.53	0.67	0.60	47.73	44.98	46.36	0.01	0.06	0.03	< 0.43	0.47	< 0.45	0.01	0.01	0.01
Ni - nickel	ug/dscm	1787.27	1699.46	1743.36	41.25	45.02	43.14	2136.77	1848.38	1992.58	3.61	14.11	8.86	3377.37	13624.87	8501.12	5.97	9.85	7.91
Pb - lead	ug/dscm	938.86	647.28	793.07	13.41	17.46	15.44	908.97	737.97	823.47	3.40	3.67	3.53	18.84	52.82	35.83	2.54	2.52	2.53
Sb - antimony	ug/dscm	35.52	111.21	73.36	2.20	2.30	2.25	100.06	95.26	97.66	< 1.72	0.71	< 1.22	7.29	< 4.31	< 5.80	< 1.48	< 1.45	< 1.46
Sr - strontium	ug/dscm	10093.24	9289.98	9691.61	144.28	167.86	156.07	12248.09	9651.74	10949.91	4.49	14.06	9.28	4001.33	13474.17	8737.75	0.37	2.98	1.68
Ti - titanium	ug/dscm	114263	113106	113685	1688.87	1927.54	1808.21	134989	107856	121423	33.18	94.93	64.05	11161	26265	18713	19.47	12.45	15.96
Tl - thallium	ug/dscm	< 2.86	< 2.85	< 2.85	< 2.16	< 2.13	< 2.15	< 4.07	< 4.15	< 4.11	< 1.72	< 1.54	< 1.63	< 3.75	< 4.31	< 4.03	< 2.46	< 2.41	< 2.44
V- vanadium	ug/dscm	4060.15	4656.39	4358.27	67.24	76.11	71.67	5505.40	4654.88	5080.14	1.84	4.06	2.95	7192.39	28059.23	17625.81	3.77	1.40	2.59
EMISSION RATE																			
Particulate (total)	lbs/hr	334.11	331.03	332.57	2.44	2.91	2.67	203.39	188.30	195.84	0.05	0.37	0.21	44.94	116.66	80.80	0.09	0.13	0.11
Ag - silver	lbs/hr	3.00e-3	< 2.52e-5	< 1.51e-3	5.62e-5	2.36e-4	1.46e-4	< 2.40e-5	< 2.54e-5	< 2.47e-5	1.94e-5	3.99e-5	2.96e-5	< 2.40e-5	< 2.62e-5	< 2.51e-5	2.71e-5	4.72e-6	1.59e-5
As -arsenic	lbs/hr	5.39e-3	7.44e-3	6.41e-3	6.95e-5	8.17e-5	7.56e-5	4.14e-3	3.70e-3	3.92e-3	< 1.32e-5	7.24e-6	< 1.02e-5	1.14e-3	2.97e-3	2.06e-3	< 1.25e-5	2.17e-6	< 7.34e-6
Ba -barium	lbs/hr	1.12e-1	9.76e-2	1.05e-1	1.85e-3	2.31e-3	2.08e-3	9.65e-2	7.80e-2	8.73e-2	4.58e-5	2.01e-4	1.24e-4	2.21e-3	4.57e-3	3.39e-3	5.46e-5	3.78e-5	4.62e-5
Be - beryllium	lbs/hr	1.66e-3	1.08e-3	1.37e-3	3.51e-5	4.52e-5	4.01e-5	1.58e-3	1.35e-3	1.46e-3	< 7.94e-6	< 7.95e-6	< 7.94e-6	< 1.44e-5	1.77e-5	< 1.60e-5	< 7.51e-6	< 7.53e-6	< 7.52e-6
Cd - cadmium	lbs/hr	< 2.52e-5	< 2.52e-5	< 2.52e-5	5.77e-6	7.57e-6	6.67e-6	< 2.40e-5	< 2.54e-5	< 2.47e-5	2.20e-6	2.34e-6	2.27e-6	< 2.40e-5	< 2.62e-5	< 2.51e-5	3.92e-6	< 1.25e-5	< 8.23e-6
Cr -chromium	lbs/hr	2.06e-2	2.17e-2	2.11e-2	7.44e-4	8.33e-4	7.89e-4	1.78e-2	1.48e-2	1.63e-2	1.97e-5	1.81e-4	1.00e-4	9.51e-4	2.17e-3	1.56e-3	4.21e-5	6.31e-5	5.26e-5
Fe - iron	lbs/hr	1.07e+1	1.11e+1	1.09e+1	1.41e-1	1.59e-1	1.50e-1	1.23e+1	1.01e+1	1.12e+1	2.77e-3	7.14e-2	3.71e-2	1.72e-1	4.09e-1	2.90e-1	9.62e-3	3.45e-2	2.21e-2
Hg - mercury	lbs/hr	2.76e-4	2.47e-4	2.62e-4	5.62e-6	7.12e-6	6.37e-6	2.82e-4	2.75e-4	2.79e-4	8.82e-8	4.86e-7	2.87e-7	< 2.72e-6	2.88e-6	< 2.80e-6	9.59e-8	8.36e-8	8.98e-8
Ni - nickel	lbs/hr	1.57e-2	1.50e-2	1.54e-2	4.35e-4	4.79e-4	4.57e-4	1.26e-2	1.13e-2	1.20e-2	2.77e-5	1.21e-4	7.46e-5	2.16e-2	8.30e-2	5.23e-2	5.05e-5	8.53e-5	6.79e-5
Pb - lead	lbs/hr	8.27e-3	5.71e-3	6.99e-3	1.41e-4	1.86e-4	1.64e-4	5.37e-3	4.51e-3	4.94e-3	2.61e-5	3.16e-5	2.88e-5	1.20e-4	3.22e-4	2.21e-4	2.15e-5	2.18e-5	2.17e-5
Sb - antimony	lbs/hr	3.13e-4	9.81e-4	6.47e-4	2.31e-5	2.45e-5	2.38e-5	5.91e-4	5.83e-4	5.87e-4	< 1.32e-5	6.10e-6	< 9.66e-6	4.66e-5	< 2.62e-5	< 3.64e-5	< 1.25e-5	< 1.25e-5	< 1.25e-5
Sr - strontium	lbs/hr	8.89e-2	8.19e-2	8.54e-2	1.52e-3	1.79e-3	1.65e-3	7.24e-2	5.90e-2	6.57e-2	3.44e-5	1.21e-4	7.77e-5	2.56e-2	8.21e-2	5.38e-2	3.17e-6	2.58e-5	1.45e-5
Ti - titanium	lbs/hr	1.01e+0	9.98e-1	1.00e+0	1.78e-2	2.05e-2	1.92e-2	7.98e-1	6.60e-1	7.29e-1	2.54e-4	8.17e-4	5.36e-4	7.13e-2	1.60e-1	1.16e-1	1.65e-4	1.08e-4	1.36e-4
Tl - thallium	lbs/hr	< 2.52e-5	< 2.52e-5	< 2.52e-5	< 2.28e-5	< 2.27e-5	< 2.27e-5	< 2.40e-5	< 2.54e-5	< 2.47e-5	< 1.32e-5	< 1.33e-5	< 1.32e-5	< 2.40e-5	< 2.62e-5	< 2.51e-5	< 2.08e-5	< 2.09e-5	< 2.09e-5
V- vanadium	lbs/hr	3.58e-2	4.11e-2	3.84e-2	7.09e-4	8.10e-4	7.60e-4	3.25e-2	2.85e-2	3.05e-2	1.41e-5	3.50e-5	2.45e-5	4.60e-2	1.71e-1	1.08e-1	3.19e-5	1.22e-5	2.20e-5

3.5.14 Convective Pass Heat Transfer and Fouling

Heat Transfer to the Convective Probes

The convective/fouling probes are air-cooled banks installed in the water-cooled duct downstream of the cyclone (see Figure 3.3). The heat duty to each of the two banks of probes is calculated by the flow rate and temperature increase of the cooling air.

It is expected that the convective heat transfer will be higher with oxygen firing due to the higher non-luminous radiative heat transfer with high CO_2 and H_2O content of the flue gas.

The gas velocity over the tube banks drops when O_2 firing, but mass flow stays about constant (see Figure 3.20). Mass flow is the more relevant to heat transfer, so this effect is minimal.

The local gas-side thermocouple was not reading during the test, but the temperature is estimated to be between 700 and 815 °C (about 1,300 to 1,500 °F). The temperature upstream of the probes in the water-cooled duct gives a qualitative indication of the changing gas-side temperature.

The heat duties to the two probe banks as functions of this upstream temperature are given in Figure 3.37 and Figure 3.38. All of the logged data points during each Test Series are plotted in the figures.

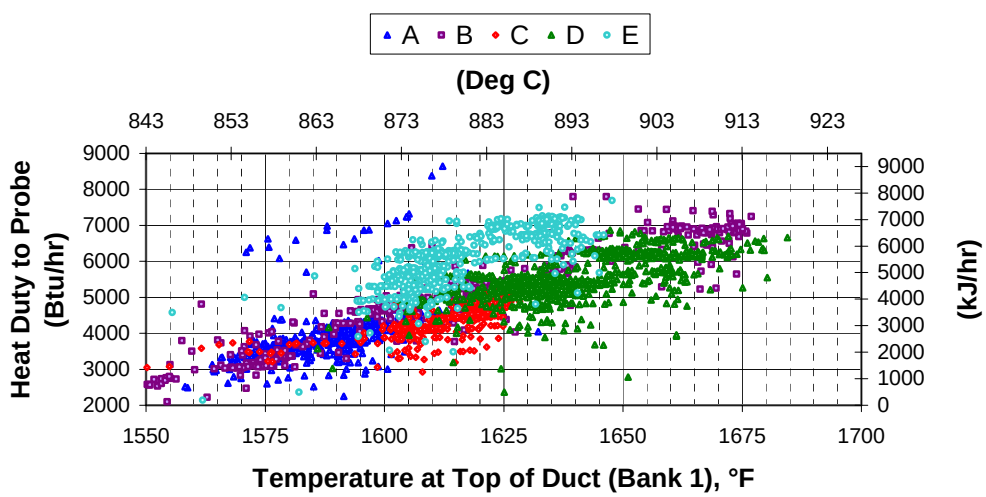

Figure 3.37: Heat Duty of Convective Probe Bank 1

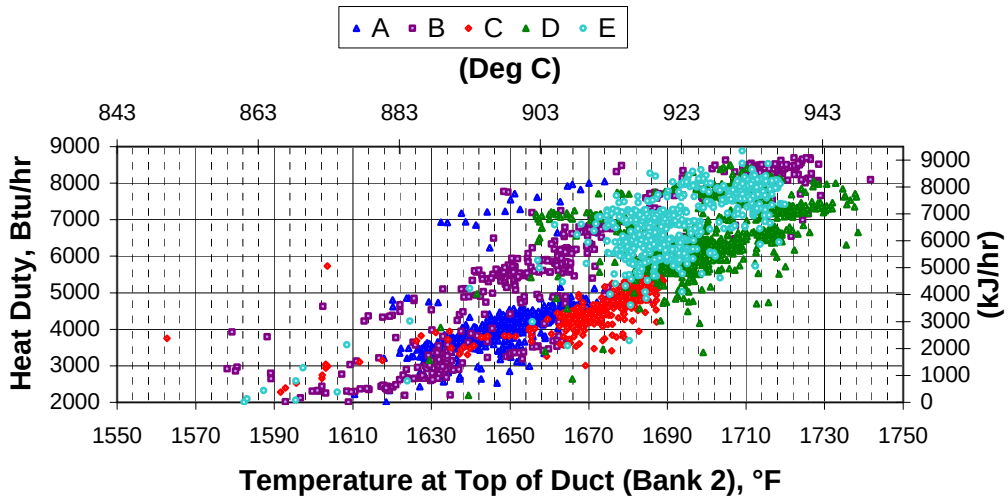

Figure 3.38: Heat Duty of Convective Probe Bank 2

Comparing the lime-only tests, we see that the heat duty is higher with oxygen firing for a comparable temperature (Test Series B *vs.* A). The increase is less marked with limestone added to the furnace (C *vs.* D), but there seems to be some increase. The heat duty clearly increases with pet coke firing, but there is no air-fired test for comparison.

Fouling of the Convective Probes

Throughout the test week, the convective pass fouling probes were observed - no severe buildup was seen. At the end of the test, the weakly bonded deposit that was present was easily removed.

The deposit was analyzed (see Table 3.9). The deposit was 90% inert, probably mostly from fine clay in the ash. The calcium in the deposit was about 15% $CaCO_3$ and the rest $CaSO_4$.

3.5.15 Moving Bed Heat Exchanger

The use of a moving bed heat exchanger (MBHE) instead of a conventional FBHE provides a number of significant advantages. A FBHE would need to be fluidized with either high-pressure flue gas or with fluidizing air. The use of flue gas would require a high-pressure recirculation fan that would be expensive, and require maintenance. The presence of CO_2 in the fluidizing gas would also increase the potential for recarbonation and agglomeration in the FBHE. Using fluidizing air would eliminate the potential for recarbonation, but would add additional requirements for ash separation, cleaning, and cooling of the air since it cannot be combined with the concentrated CO_2 stream leaving the CFB. In either case, the FBHE will have higher auxiliary power requirements and will present arrangement issues for units with a large number of cyclones and FBHEs.

The use of the MBHE mitigates these issues. Solids flow through the MBHE by gravity. It does not require any high pressure fluidizing air or gas. This eliminates the potential for recarbonation or the need for fluidizing air cleanup and cooling. It also results in a much lower auxiliary power requirement than a FBHE. The MBHEs can be designed for

larger heat duties than FBHEs. Large O_2-fired CFB can therefore be designed with a fewer number of MBHEs than FBHEs, which results in a more compact and less expensive plant arrangement.

A moving bed heat exchanger (MBHE) was installed in the MTF to cool re-circulated ash. Solids flow by gravity through a horizontal tube bundle consisting of spiral-finned tubes. A seal leg and a flow control device that prevent air or flue gas permeation through the solids control the solids flow rate. This reduces the potential for recarbonation ($CaO + CO_2 \rightarrow CaCO_3$) in the re-circulated ash as it is cooled before being returned to the combustion chamber. There is also an operating cost advantage for the facility in that relatively expensive steam, N_2, or CO_2 gases are not required for fluidization.

The MBHE tube bundle arrangement is a multi-pass layout which may have counter flow and parallel flow sections. In commercial applications, the coolant would be superheated or reheated steam. The counter flow arrangement reduces the amount of tubing pressure parts because the higher log-mean temperature difference between the solids and coolant. A parallel arrangement may be used in finishing sections to minimize the metal temperature-stress requirements at the coolant outlet end.

Heat is transferred directly from particles in contact with the tube-fin surface. Particles are mixed as they travel from one pass to another giving good heat transfer. While this holds for conventional CFB coal fired ash solids, there was some question whether the heat transfer would be affected by variations in fuel ash properties or CFB inert bed material, particularly with O_2 firing. The test results reported here are of interest for this reason.

The MBHE used for this test is shown in Figure 3.39. It was installed in parallel with a fluidized bed heat exchanger used for conventional MTF CFB firing. Solids were supplied to the top nozzle of the MBHE by a side slip stream from the MTF cyclone seal pot. A rotary valve at the bottom controlled solids flow through the MBHE. The MBHE was previously fabricated and installed in the MTF to evaluate heat transfer performance for earlier projects.

The MBHE consisted of two tube bundles shown in Figure 3.39, the upper having 4 tubes in depth and the lower having 6 tubes in depth. Each bundle was seven tubes wide. The bundles consisted of 38.1 mm (1.5”) OD tubes with 12.7 mm (0.5”) high by 1.52 mm (0.06”) thick circumferential fins on 38.1 mm (0.5”) spacing. The tubes were T22 alloy and the fins were Armco 409 alloy. Tube spacing was offset with S_T= 63.5 mm (2.5”) and S_L = 47.63 mm (1.875”), where S_T is center-to-center spacing in the transverse direction and S_L is center-to-center spacing in the longitudinal direction.

A photograph of the MBHE installation in the MTF is shown in Figure 3.40. The main metal enclosure containing refractory insulation and the tube bundles are shown. Also, the uninsulated coolant inlet headers and insulated coolant outlet headers are shown on the right. Solids are admitted to the top of the MBHE from the deck above, and exit below the deck supporting the MBHE. A 55-gallon metal drum in the background indicates the scale of the MBHE.

Instruments were installed on the MBHE to measure its performance. The primary

instruments were type K thermocouples to measure solids inlet and outlet temperatures and the tube bundle coolant inlet and outlet temperatures. In addition, two turbine meters measured cooling water flow in each bundle. All instruments were read by the MTF LabView data acquisition system and stored on the PPL server network for later analysis.

The tube bundles were cooled by local Metropolitan District Commissions (MDC) water of high purity. A precision turbine meter measured the water flow rate. The MBHE heat transfer rate was determined for each bundle, using the cooling water as a heat flow medium. The inlet temperature of the coolant was measured by two inlet header thermocouples. The outlet temperature of each pass of a tube bundle was measured by a thermocouple inserted axially through the header into the outlet of the tube to a depth of 203.2 mm (8 inches). A boundary layer trip ring was installed in each tube outlet upstream from the thermocouple to provide a mixed fluid temperature. The average heat flow to a bundle was calculated from the average inlet-outlet temperature difference, coolant flow rate, and coolant specific heat.

The solids flow rate through the heat exchanger was calculated from the solids average inlet-outlet temperature difference, MBHE heat flow, and solids specific heat. The rotary valve could also have been used as a solids flow meter, but it was un-calibrated. Also, rotary valves are volumetric devices and the pockets in the valve may not be full under some circumstances. The heat balance method of calculating solids flow rates was preferred because of this.

An intermediate solids temperature between tube bundles was calculated from the average solids inlet temperature, top tube bundle heat transfer, calculated solids flow rate, and solids specific heat. This solids temperature was calculated because the spacing between top and bottom bundles was too small for an accurate temperature measurement by thermocouples.

The average inlet ($T_{si\ avg}$) and outlet solids temperatures ($T_{so\ avg}$) for this test campaign are shown in Figure 3.41. The solids inlet temperatures ranged from 760 to 870 °C (1400 to 1600 °F) during the test campaign, depending on the combustion test conditions of the project. Both tube bundles were in service during the test. The average measured solids outlet temperature was very low and approached the cooling water inlet temperature in some cases. Because there were no solids thermocouples between the tube bundles as explained previously, an intermediate solids temperature between the upper and lower tube bundles ($T_{smu\ calc}$) was calculated. This temperature was determined using a solids flow, tube bundle heat transfer, and solids inlet temperature as shown. Measured test data is indicated by lines on these figures. Predicted conditions are indicated by the symbols. A calculation design procedure was used to predict the solids outlet temperature for each tube bundle and the results are shown as symbols at selected times for each tube bundle. There is good agreement between predicted and measured temperatures except for those low load tests where the lower bundle outlet solids temperature approaches the coolant temperature.

The heat transfer to the coolant in the upper ($Q_{u\ avg}$) and lower tube bundles ($Q_{l\ avg}$) is shown in Figure 3.42. The solids flow rate ($W_{s\ avg}$) through the MBHE is also shown. The heat transfer in the MBHE is governed by the log-mean temperature difference (LMTD) between solids and coolant, surface area, fin effectiveness, solids velocity, and

solids thermal properties. MBHE heat transfer does not significantly change with anything other than the LMTD. The LMTD does change with the solids flow rate. The results of Figure 3.42 show the close relationship between solids flow rate and heat transfer. A calculation design procedure was used to predict the coolant heat flow for each tube bundle and the results are shown as symbols at selected times for each tube bundle. There is good agreement between predicted and measured heat transfer.

Also shown in Figure 3.42 are bars indicating operating conditions in the MTF. Comparisons of differences between measured and predicted heat transfer do not show a significant influence of operating conditions.

The solids flow was selected from the test matrix of the O_2 firing test program. This program was designed primarily for analysis of the combustion and emission characteristics of O_2 firing and not for MBHE performance. The solids flow through the MBHE was changed as determined by the firing requirements, not MBHE requirements.

The difference between measured and calculated heat transfer does not significantly vary from test to test. This indicates that neither O_2 vs. air firing, coal vs. pet coke firing, nor limestone variation have a significant influence MBHE heat transfer performance.

The heat transfer calculation procedure for the MBHE is similar to a convective pass section of a conventional boiler. However, the spiral fin heat transfer calculation procedure was refined for the MBHE application. The calculation procedure is complicated by the heat transfer performance being affected by both the fin effectiveness and by the solids-coolant log mean temperature difference. Fin effectiveness is governed by the surface heat transfer coefficient. The surface heat transfer coefficient is governed by solids transport properties, particle size, and solids flow distribution. At the same time, the solids and coolant specific heats are temperature dependant. For this reason, the heat transfer calculation procedure is iterative and gives correct results when the heat transfer for both coolant and solids converge. This procedure has been developed from a series of previous tests on MBHE performance and the conditions of this campaign confirm its validity for O_2 firing as well as other applications.

In summary

- The MBHE performed as expected in terms of heat transfer. Also, the performance did not deteriorate or change due to changes in firing conditions of the test campaign; load, fuel, limestone, or air vs. O_2.
- The MBHE performance did not change with time due to fouling of the heat transfer surface, or experience loss of solids flow due to agglomeration
- The MBHE was opened for inspection after the test campaign and the surfaces were found to be clean with no evidence of solids accumulation.

Table 3.15: Moving Bed Heat Exchanger (MBHE) Test Data Summary

Date	Condition	$Qu_{measured}$		$Ql_{measured}$	
		Btu/h	kJ/h	Btu/h	kJ/h
6/19 00:02	Bit Coal/Air/ATF40	4.09E+05	4.31E+05	9.70E+04	1.02E+05
6/19 06:32	Bit Coal/Air/ATF40/ Low Load	2.64E+05	2.79E+05	4.32E+04	4.56E+04
6/19 20:02	Bit Coal/O_2/ATF40	4.89E+05	5.16E+05	1.67E+05	1.76E+05
6/20 01:07	Bit Coal/O_2/ATF40	7.71E+05	8.13E+05	4.34E+05	4.58E+05
6/20 19:03	Bit Coal/O_2/Aragonite	7.73E+05	8.16E+05	4.38E+05	4.62E+05
6/21 12:01	Petcoke/O_2/Aragonite	7.59E+05	8.01E+05	4.00E+05	4.22E+05

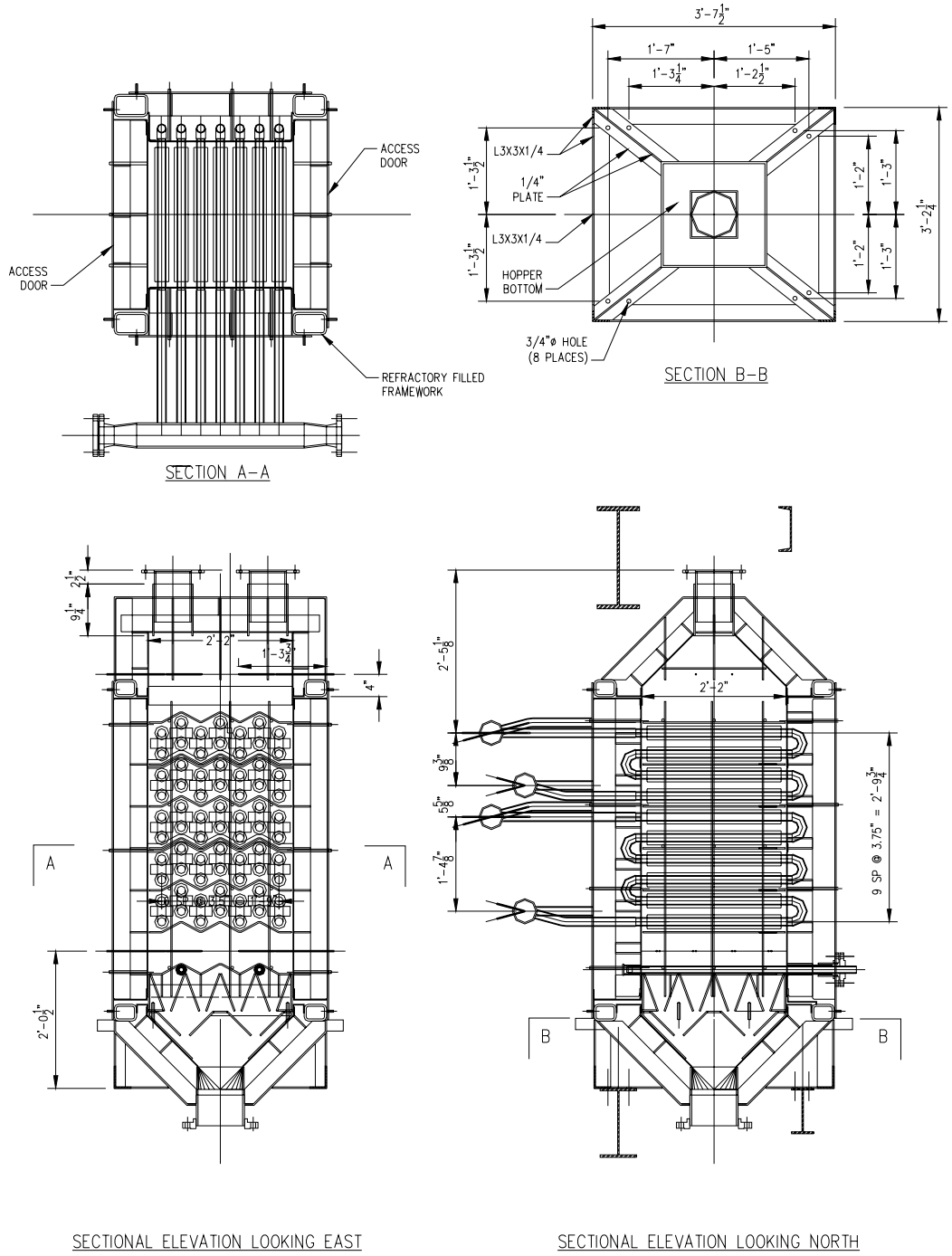

Figure 3.39: Moving Bed Heat Exchanger Sectional Views

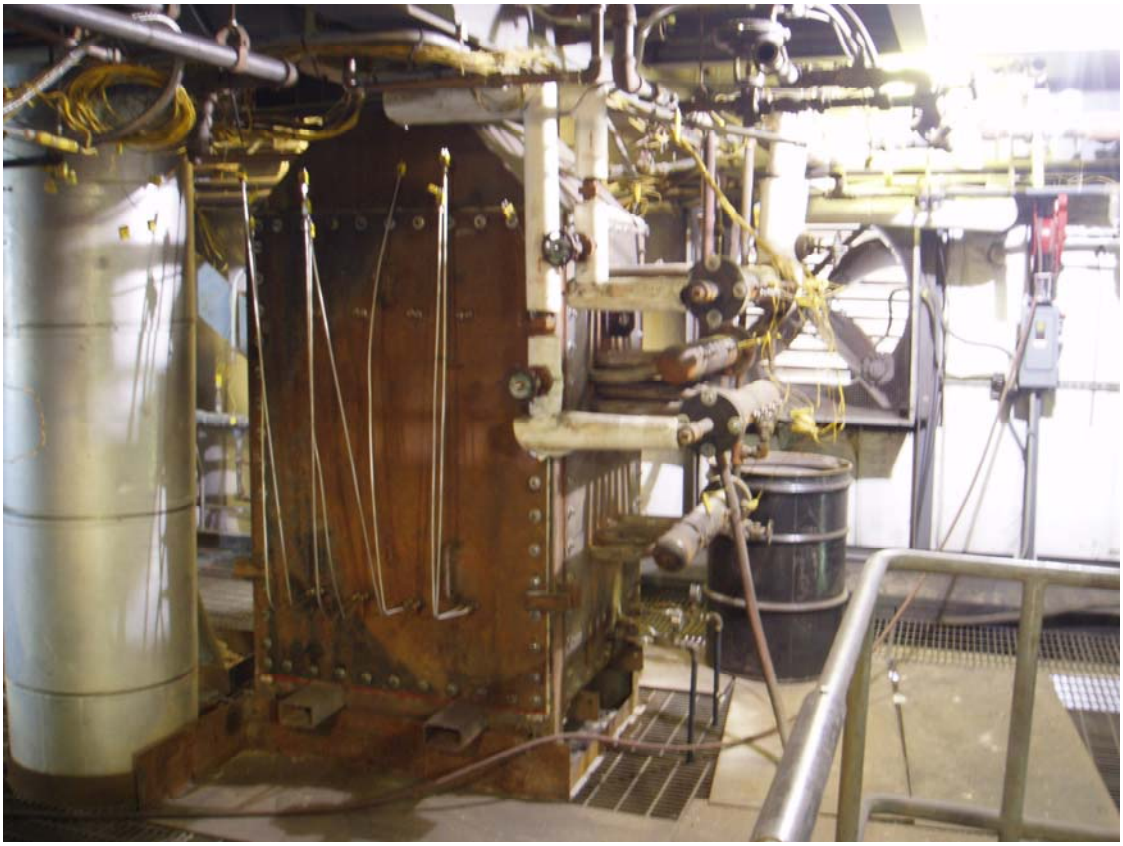

Figure 3.40: Moving Bed Heat Exchanger

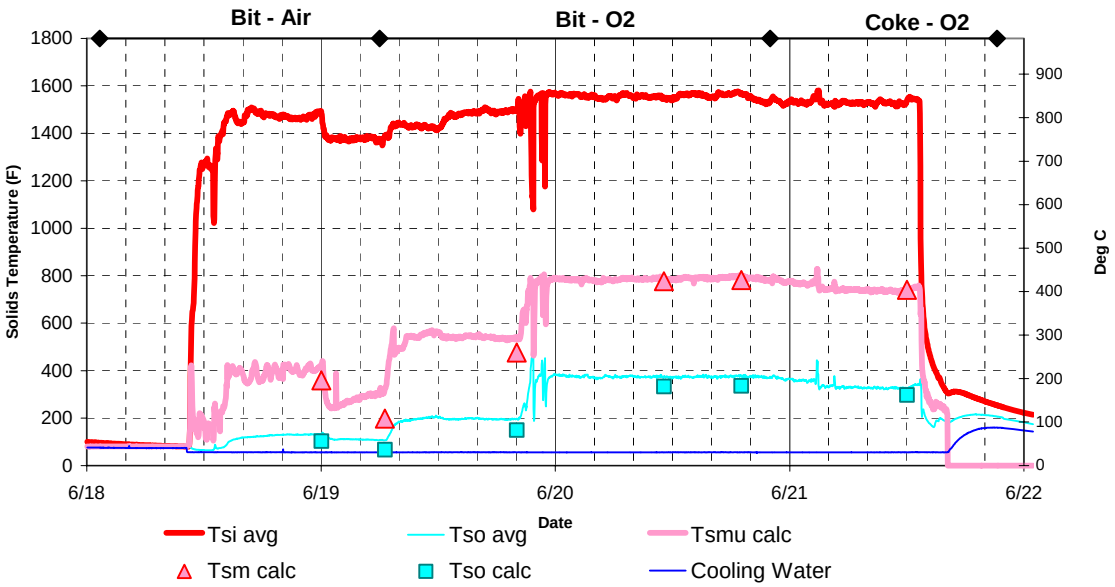

Figure 3.41: Moving Bed Heat Exchanger Average Solids Temperatures

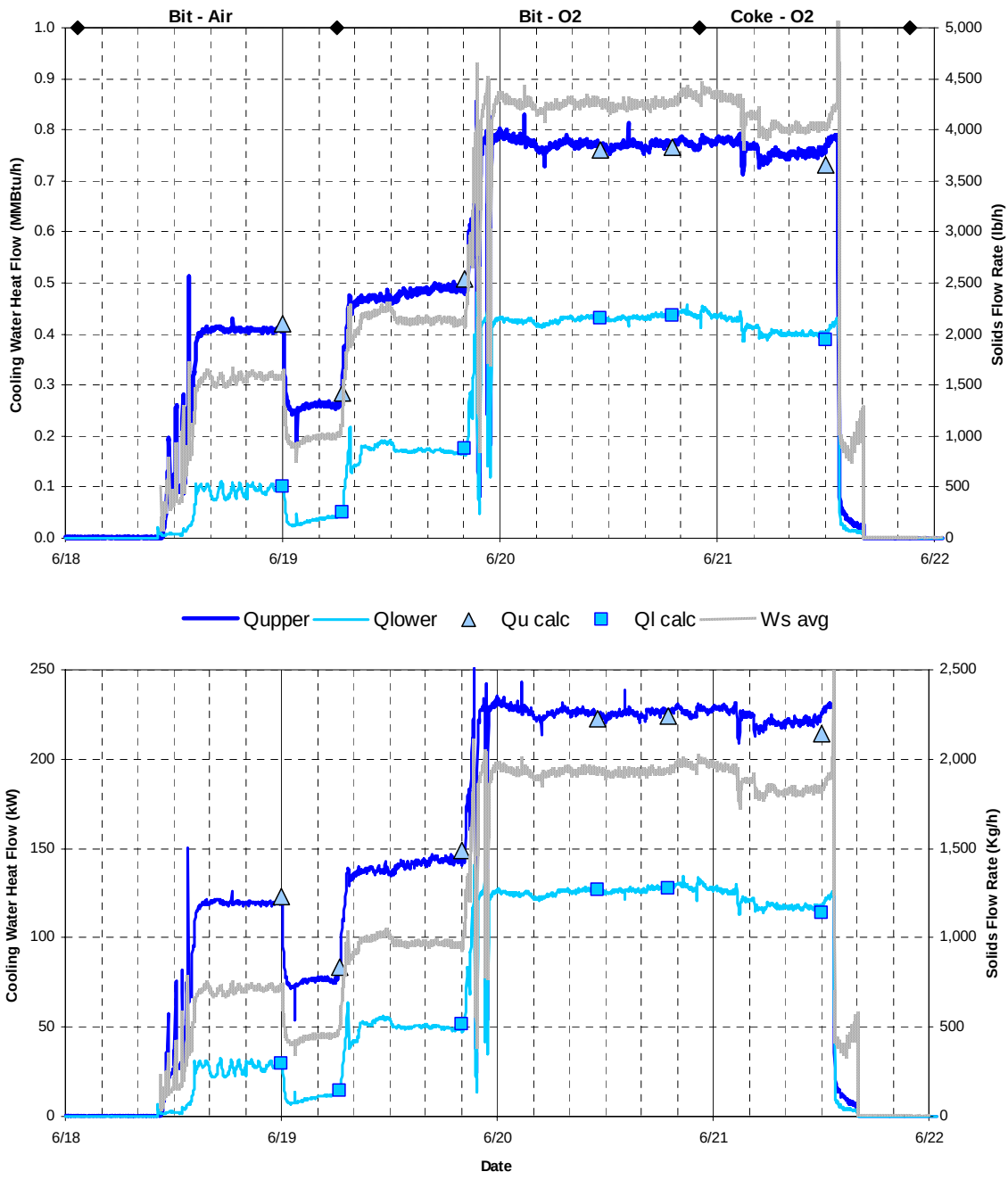

Figure 3.42: Moving Bed Heat Exchanger Solids and Heat Flows

3.6 Summary of Pilot Scale Test Results

The main results from the 2005 pilot scale testing are summarized here.

- There were no operational problems due to recarbonation or any other issues due to the oxygen firing.
- The sulfur capture with lime only to the back-end baghouse/FDA system was slightly lower with oxygen firing compared to air firing. There is evidence of some CO_2 being captured in the FDA, along with the SO_2.
- The sulfur capture in the furnace with limestone addition was higher with oxygen firing than with air firing. This was likely due in part to lower velocity with oxy-firing (longer residence time) and in part to more calcium in the furnace inventory during the oxygen fired tests.
- Because of the higher capture in the furnace, the SO_2 entering the FDA was lower with oxygen firing. The percentage sulfur reduction across the FDA was similar for air and oxygen firing.
- As expected, the NO_x emissions were low with oxygen firing. Ammonia addition further reduced the NO_x emissions. When the base NO_x level was very low (50 ppmv), high stoichiometric ratios were required, which could lead to high ammonia slip. When NO_x emissions were somewhat higher (100 ppmv), more reasonable amounts of ammonia achieved about 50% reduction.
- CO emissions from bituminous were higher with oxygen firing than with air firing. This is likely due to the high CO_2 partial pressure in the flue gas suppressing the oxidation of CO. The CO emissions from pet coke were quite low with oxygen firing. (No air firing was done with pet coke for comparison, but CO is typically low.)
- The N_2O and VOC emissions were low under all circumstances.
- The heat loss due to unburned carbon in the fly ash is slightly less with oxygen firing compared to air firing.
- The emissions of mercury and other trace metals when oxy-firing were at least as low as with air firing.
- The MBHE performed as expected in terms of heat transfer. Also, the performance did not deteriorate or change due to changes in firing conditions of the test campaign; load, fuel, limestone, or air vs. O_2.
- The MBHE performance did not change with time due to fouling of the heat transfer surface, or experience loss of solids flow due to agglomeration
- The MBHE was opened for inspection after the test campaign and the surfaces were found to be clean with no evidence of solids accumulation.

4 TECHNO-ECONOMIC EVALUATIONS

This section describes the technical and economic evaluation results, which come from the two related case studies that are defined in this report. The two cases studied include **Case-1:** an existing air fired CFB steam plant base case and **Case-2:** a retrofit of the existing air fired CFB steam plant with oxygen firing and CO_2 capture. The selected existing study unit is described in Section 4.1 including the criteria used for selection while the performance and design basis for the study is defined in Section 4.2.

The results of this techno-economic evaluation are presented in terms of several categories including plant performance, investment cost requirements, and economic analyses. Descriptions of the major processes and of the major equipment used for these processes are also provided. The performance of the power plant both before and after retrofit to CO_2 capture is presented in terms of the associated energy and material balances as well as various plant performance summary tables and comparison graphs.

The performance results for the "business as usual" Case-1 is shown in Section 4.3 and is used primarily for comparison with Case-2. The performance results for Case-2 with O_2 firing and CO_2 capture are shown in Section 4.4. Retrofit modifications are described with major equipment shown on general arrangement drawings. Retrofit investment cost estimates and operating and maintenance costs are shown in Section 4.5. Finally, economic evaluation results are shown in Section 4.6, which fully quantifies the economic impacts of retrofitting this unit to O_2 firing and CO_2 capture.

Brief descriptions of the two study cases (Case-1 and Case-2) are presented below with more detailed descriptions provided later in Sections 4.3 and 4.4, respectively.

Case-1: Existing CFB steam power plant without CO_2 Capture (Base Case).

Conventional existing air-fired CFB based steam power plant (~90 MWe-net) without CO_2 capture using a subcritical pressure steam cycle with the following steam conditions: 138 bara / 538 °C / 538 °C, 7.6 cm Hga (2,000 psia / 1,000 °F / 1,000 °F, 3.0 in. Hga).

<u>Implication:</u> Provides a reference point for comparison of performance & economic analyses. Provides the existing plant to which the retrofit technology for O_2 firing and CO_2 capture are applied in Case-2.

Case-2: Retrofit of the Case-1 existing power plant to oxygen firing with CO_2 Capture, Purification, Compression and Liquefaction.

Oxygen is provided from a Cryogenic Air Separation Unit (ASU). The CFB Boiler Island provides a concentrated CO_2 flue gas product stream to the Gas Processing System (GPS) where it is further purified, compressed and liquefied to meet a specification for an Enhanced Oil Recovery (EOR) application.

<u>Implication:</u> A near term CO_2 capture concept. Cost savings for the Gas Processing System equipment as compared to current commercially available amine scrubbing systems. Improved plant thermal efficiency and lower net plant output reduction as compared to current commercialy available amine based CO_2 capture systems (reduced energy penalty).

The major new equipment for the Case-2 retrofit concept in this study include:

- An Air Separation Unit with a nominal capacity of about 1,640 tonne (1,800 tons) of O_2 per day.
- A Gas Processing System with a nominal capacity of about 1,910 tonne (2,100 tons) of CO_2 per day including CO_2 purification, compression, and liquefaction.
- Other equipment as required by the existing boiler and balance of plant systems to accommodate the retrofit to O_2 firing and CO_2 capture. The added equipment consists of primarily a new gas recirculation system, new O_2 supply piping, a new FDA SO_2 removal system, controls/instrumentation for the O_2 firing and gas recirculation systems, and integration of a new low level heat recovery system into the existing steam cycle.

4.1 Study Unit Selection and Description

This section of the report provides a description of the selected study unit and includes the criteria used for selection of the existing unit. The selection criteria were developed such that the results of this study would be helpful when an actual large scale technology demonstration was undertaken.

4.1.1 Study Unit Selection Criteria

The study unit selected for this conceptual retrofit design study (retrofit to O_2 firing and CO_2 capture) was chosen on the basis of the following criteria:

1. An existing CFB unit of ALSTOM design, thus ensuring that all original boiler design and performance information are available
2. A unit encompassing all major conventional features of a commercial CFB plant:
   - Boiler Island - furnace, cyclone, external fluidized bed heat exchanger, convective pass, baghouse, and ID/FD fans
   - Balance of Plant - Fuel and sorbent preparation and conveyance infrastructure, steam turbine, and generator
3. A unit ranging in size from 50-100 MWe. This represents an appropriate size for a technology demonstration project, from both a technical and project cost standpoint. The size of the selected existing unit is small relative to today's capabilities, so that the results of this study would be applicable for a future technology demonstration. It was recognized however that selection of a small unit would cause greater retrofit specific cost ($/kW) and economic impacts (incremental COE, CO_2 mitigation cost), as compared to studies using much larger study units, due to "economy of scale" effects.
4. A unit located in the United States, which should facilitate the actual search in the future for a unit to demonstrate the O_2 firing technology at large scale in North America
5. A unit burning coal, petroleum coke or a mixture thereof.

Based on the preceding criteria, the unit described in Section 4.1.2 below was selected for

the current conceptual retrofit design study. The selected unit met all the above selection criteria.

4.1.2 Study Unit Description

The power plant analyzed in this study is an existing coal burning steam power plant. The coal is combusted in a relatively small CFB steam generator unit of ALSTOM design. A general arrangement side elevation drawing of the study unit CFB boiler is shown in Figure 4.1. (Additional drawings are shown in Section 7.1.) This boiler is a nominal 90 MWe-net CFB unit, which supplies steam to a subcritical pressure steam cycle. The CFB boiler is one of four identical units at the site. The four boilers supply steam to two steam turbines. The furnace of the selected unit is a single cell design that fires medium volatile bituminous coal. The unit has two cyclones and two external fluidized bed heat exchangers (FBHE's). This unit is representative in many ways of a large number of coal fired CFB units in use today. The unit is designed to generate about 284,401 kg/hr (627,000 lbm/hr) of steam at full load at 138 bara (2,000 psia) and 538 °C (1005 °F) with reheat also to 538 °C (1005 °F). These are fairly common steam cycle operating conditions for utility scale CFB based power generation systems in operation today.

Combustor:
The furnace/combustor is about 11.0 m (36 ft) wide, 5.5 m (18 ft) deep, and 30.5 m (100 ft) high. Crushed coal, limestone and preheated air are supplied to the furnace where combustion occurs. Injection of limestone into the furnace is provided to remove sulfur dioxide from the flue gas by converting it to $CaSO_4$. Bed material ($CaSO_4$, unreacted lime, ash, and small amounts of unburned carbon) is continuously drained to remove captured sulfur and ash and to control furnace solids inventory.

Cyclones, Seal Pots and Solids Control Valves:
A mixture of hot flue gas and entrained solids leaves the furnace and enters two 6.4 m (21 ft) diameter cyclones that separate the flue gas from the solids. The hot solids separated in the cyclone flow through a seal pot and a solids control valve. The seal pot provides a pressure seal to prevent gas flowing from the combustor through the solids piping system into the cyclone bottom, which is at a lower pressure. The solids control valve is used to control steam outlet temperatures by biasing hot solids either directly back to the furnace or through the FBHE's that are used to cool the solids by heating steam.

Fluid Bed Heat Exchangers:
The FBHE's contain tube banks (superheater, reheater and evaporator sections), which exchange heat with the hot solids from the cyclones. The FBHE's are fluidized with air such that the solids continuously move through the FBHE's and back to the furnace. The air used for fluidization is supplied from the fluidizing air blowers. Outlet steam temperature is controlled by adjusting the solids flow through the FBHE's and with de-superheating spray.

Backpass:
The flue gas leaving the cyclones enters the rear pass, which includes a low temperature superheater, a low temperature reheater, and an economizer section, which preheats the feedwater prior to evaporation.

Air Heater:
Flue gas leaving the rear pass economizer section enters an air heater. The air heater used in this unit is a Heat Pipe (Q-Pipe) type regenerative air heater, which cools the flue gas by ultimately providing heat to both the primary and secondary air streams. The heat is transferred from the flue gas to the air within the air heater via a separate fluid contained within sloped tubes. The fluid within the tubes evaporates on the hot flue gas side, flows up to the cold air side where it is condensed and then flows back to the hot side to complete its cycle. Because of its design, this type of air heater does not leak any of the relatively high-pressure air into the relatively low-pressure flue gas stream.

Baghouse:
Particulate matter is removed from the cooled flue gas leaving the air heater in a fabric filter (baghouse). The flue gas is drawn through the unit with the induced draft fan (located downstream of the baghouse) and is then exhausted to the atmosphere through the common stack (common to the four boilers). The induced draft fan and forced draft system (primary air fan, secondary air fan, and fluidizing air blowers) are controlled to operate the unit in a balanced draft mode with the cyclone outlet maintained at a slightly negative pressure, typically about -1.3 cm wg (-0.5 in wg).

Water/Steam Circuit:
The water/steam circuit within the CFB boiler starts with the economizer where warm feedwater is provided from the final extraction feedwater heater. Water leaving the economizer enters the steam drum. This water mixes with recirculated water within the drum and the mixture is circulated through the furnace walls and evaporator bank located within one of the FBHE's where evaporation takes place. The steam/water mixture leaving these evaporator sections is returned to the steam drum where the steam and water are separated. The water is recirculated through the evaporator sections as described above and the separated steam flows to the superheater circuit.

The superheater is divided into two major sections. Saturated steam leaving the steam drum first cools the roof and rear pass walls before supplying the low temperature superheater section. The low temperature superheater section is located in the rear pass of the unit and is a horizontal section. Steam leaving the low temperature superheater section first flows through the de-superheater spray station which is used for final steam temperature control and then to the finishing superheater sections located in one of two external FBHE's. Steam leaving the finishing superheater is piped to the high-pressure turbine where it is expanded to reheat pressure.

The steam exits the HP turbine exhaust flange and is piped to the reheater circuit. The reheater circuit starts with the reheat de-superheating spray station. Steam leaving the spray station flows to two reheater sections in series, a low temperature section followed by a finishing section. The low temperature reheater section is located in the rear pass of the unit. Steam leaving the low temperature reheater is piped to the finishing reheat section, which is located in one of the two external FBHE's.

The steam leaving the finishing reheater section is returned to the intermediate pressure turbine where it continues its expansion through the intermediate and low-pressure turbines for power generation before being exhausted to the condenser. The steam turbine generator produces about 100 MWe at Maximum Continuous Rating (MCR). The steam

cycle has six feedwater heaters (three low-pressure heaters, a deaerator, and two high-pressure heaters) where the feedwater is preheated to about 237.8 °C (460 °F) before entering the economizer of the CFB steam generator unit. The boiler feed pump is electric motor driven.

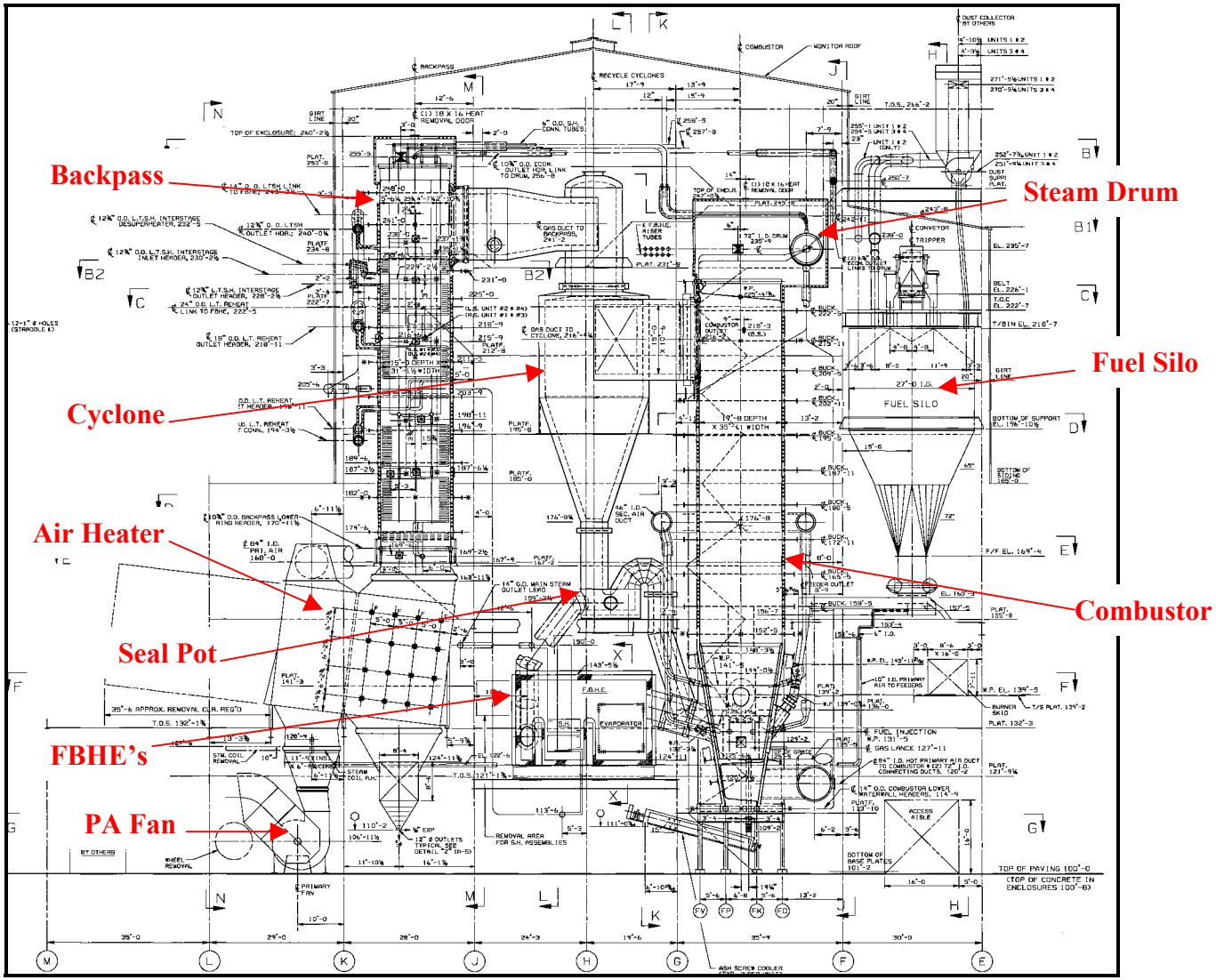

Figure 4.1: Study Unit (Existing CFB Steam Generator) Sectional Side Elevation Drawing

4.2 Plant Performance Basis, Equipment Design Basis, and Project Scope

This section describes the basis for plant performance calculations and equipment design for each of the two cases analyzed in this study. Included are descriptions of various common parameters for the two cases, the CO_2 product specification used for the CO_2 capture case (Case-2) and other design and performance bases used throughout the study. Additionally, the overall project scope is defined in this section.

The equipment design basis and the basis for plant performance calculations used in this study are similar to what was used in two previous studies (Marion, et al., 2003 and Nsakala, Liljedahl, and Turek, 2004).

4.2.1 Common Parameters for Case Studies

Plant performance calculations and retrofit equipment designs were based on many parameters that were common to both study cases including identical coal and limestone analyses, ambient conditions, site conditions, etc. In this manner, the impacts for the O_2 fired CO_2 capture technology are clearly quantified and fully attributable to the application of the CO_2 capture technology and not shifted due to assumption differences between the cases. The common items between the two cases are described in this section.

Consumables:

Table 4.1 shows the design coal analysis which was used for both cases in this study. The coal is classified as a medium volatile bituminous coal and is representative of the range of coals that are currently used at this site. Table 4.2 shows the limestone analysis that was added to the furnace for SO_2 capture in Case-1 only.

Table 4.1: Design Coal Analysis (Medium Volatile Bituminous)

Constituent	(Units)	
O_2	(wt. frac.)	0.0218
N_2	"	0.0123
H_2O	"	0.0417
H_2	"	0.0293
Carbon	"	0.6217
Sulfur	"	0.0251
Ash	"	0.2481
Total	"	1.0000
HHV Coal	(Btu/lbm)	11,103
	(kJ/kg)	23,201

Table 4.2: Design Limestone Analysis

Constituent	(Units)	
$CaCO_3$	(wt. frac.)	0.9830
Moisture	"	0.0000
Ash	"	0.0170
Total	"	1.0000

In Case-2, instead of limestone, a mixture of lime (CaO) and water was added in the new Flash Dryer Absorber system for SO_2 capture. Limestone was not added to the furnace in Case-2, due to concerns regarding recarbonation. For the purpose of this study, the lime was assumed to be pure Calcium Oxide (CaO).

Additionally, a small quantity of natural gas is used in Case-2 for desiccant drying in both the Gas Processing System and Air Separation Unit. For the purpose of this study, the natural gas was assumed to be pure Methane (CH_4) with a higher Heating Value (HHV) of 55,578 kJ/kg (23,896 Btu/lbm).

Plant Ambient Design Conditions and Site Characteristics:

The two plants included in this conceptual level study are both assumed to be located on a common existing site, and are assumed to be operated under common conditions of fuel, limestone, utility, and environmental standards. This section describes the existing host site conditions, which are used as a design basis for retrofitting the existing plant to O_2 firing and CO_2 capture.

Table 4.3 lists ambient and other relevant characteristic assumptions for this site. The ambient conditions used for all material and energy balances were based on the standard American Boiler Manufacturers Association (ABMA) atmospheric conditions (i.e., 26.7°C, 80 °F; 1.01 bara, 14.7 psia; 60 percent relative humidity). Steam cycle calculations for both cases use a condenser pressure of 7.6 centimeters of mercury absolute (3.0 in Hga) as shown in Table 4.3. For equipment sizing the maximum dry bulb temperature is 35.0°C (95°F) and the minimum dry bulb temperature for mechanical design is –6.7°C (20°F).

Table 4.3: Site Characteristics

Design Parameter	Units	Value	
Ash Disposal		Off Site	
Water Source		River	
Design Relative Humidity	percent	60.0	
Elevation	ft, m	500	152.40
Design Atmospheric Pressure	psia, bara	14.7	1.01
Design Temperature, dry bulb	°F, °C	80	26.7
Design Temperature, wet bulb	°F, °C	52	11.1
Design Condenser Pressure	in, cm Hga	3	7.62

For costing purposes, the existing plant site is assumed to be located in the Gulf Coast region of southeastern Texas. The site consists of approximately 2.5 km^2 (300 acres) usable within 24 km (15 miles) of a medium-sized metropolitan area, with a well-established infrastructure capable of supporting the required construction work force. The area immediately surrounding the site has a mixture of agricultural and light industrial uses. The site is served by a river of adequate quantity for use as makeup cooling water with minimal pretreatment and for the receipt of cooling system blowdown discharges.

A railroad line suitable for unit coal trains passes within 4 km (2-1/2 miles) of the site boundary. A well-developed road network serves the site, capable of carrying AASHTO H-20 S-16 loads and with overhead restriction of not less than 4.9 meters (16 feet) (Interstate Standard).

The site is on relatively flat land with a maximum difference in elevation within the site of about 9 meters (30 feet). The topography of the area surrounding the site is rolling hills, with elevations within 1,800 meters (2,000 yards) not more than 90 meters (300 feet) above the site elevation. The site is within Seismic Zone 1, as defined by the Uniform Building Code.

The following list further describes the assumed existing site characteristics available for the addition of the new ASU and GPS systems as well as other equipment added to the Boiler Island.

- The site is relatively clear and level with no characteristics that would cause any unusual construction problems.
- The structural strength of the soil is adequate for spread footings (no piling is required) at this site.
- No rock excavation is required on this site.
- An abundant sub-surface water supply is assumed available on this site.

Additionally, the following utilities are assumed to be available at the existing site.

- Communication lines
- Electrical power for plant retrofit construction
- Potable water and sanitary sewer connections

Steam Cycle

The steam cycle represents another common basis for both plants. It is nearly identical for Cases 1 & 2 differing only by the addition of a low-level heat recovery system for Case-2, which is used for recovery of heat rejected from the ASU. The steam turbine for the existing plant is a single reheat machine (138 bara, 2,000 psia / 538 °C, 1,000 °F / 538 °C, 1,000 °F) with a main steam flow of 284,401 kg/hr (627,000 lbm/hr) and a condenser pressure of 7.6 cm Hga (3.0 in Hga). The cold reheat flow is 257,375 kg/hr (567,416 lbm/hr). The main steam flow and cold reheat steam flow is identical for Cases 1 & 2. Six extraction feedwater heaters are used to preheat the feedwater to 237.8 °C (460 °F)

for Case-1. In Case-2, the first two low-pressure feedwater heaters are partially bypassed by some of the condensate leaving the condensate pump, which supplies the new low level heat recovery system for heat recovery in the air separation unit. The heated condensate for Case-2 is returned to existing extraction heater #3 followed by the deaerator and the high-pressure extraction feedwater heaters where it is also heated to 237.8 °C (460 °F).

4.2.2 Additional Design Bases Used for Case-2

Several additional design bases were used which were specific to the retrofit case (Case-2) only. These additional design bases included the CO_2 product specification, the assumed available plant services, and the basis used for the design of added structures and foundations that are part of the plant retrofit.

CO_2 Product Specification

The CO_2 capture system for Case-2 was designed for a minimum of 94 percent CO_2 capture from the boiler flue gas stream. Table 4.4 shows the Dakota Gasification Project's CO_2 Product Specification achieved for EOR (Dakota, 2005). This purity specification was used as a guideline for the Gas Processing System (GPS) design in this study. It should be understood that product purity specifications for the CO_2 are very dependent on the individual oil field being flooded.

Table 4.4: Dakota Gasification Project's CO_2 Product Specification for EOR

Component	(units)	Value
CO_2	(vol %)	96
H_2S	(vol %)	1
CH_4	(vol %)	0.3
C_2 + HC's	(vol %)	2
CO	(vol %)	---
N_2	(ppm by vol.)	6000
H_2O	(ppm by vol.)	2
O_2	(ppm by vol.)	100
Mercaptans and other Sulfides	(vol %)	0.03

The nitrogen concentration in Table 4.4 is 6000 ppmv. It should be noted that according to Charles Fox of Kinder Morgan (Fox, 2002), a maximum nitrogen concentration of 4 percent (by volume) would be required to control the minimum miscibility pressure.

The CO_2 product is provided in a liquid state at the plant boundary at 138 barg (2,000 psig).

Plant Services:

The following services and support systems are assumed to be available at the plant as part of the existing balance-of-plant systems for use in the retrofit of the existing plant.

Auxiliary Power Systems:

- 7,200 V system for motors above 2,240 kW (3,000 hp).
- 4,160 V system for motors from 190 to 2,240 kW (250 to 3,000 hp).
- 480 V system for motors from 0 to 190 kW (0 to 250 hp) and miscellaneous loads.
- Emergency diesel generator (480 V) to supply loads required for safe and orderly plant shutdown. Instruments and controls and other loads requiring regulated (1-percent) 208/120 Vac power are supplied from this source.
- 250 Vdc system motors and, via static inverters, uninterruptible ac power for the integrated control and monitoring system intercommunication.
- 125 Vdc system for dc controls, emergency lighting, and critical tripping circuits including the plant shutdown system.

Cooling Water:

- Cooling water (from the cooling towers) is available at between 1.4 and 2.1 barg (20 and 30 psig), 32.2 °C (90 °F) maximum temperature. The water is periodically chlorinated, and pH is maintained at 6.5 to 7.5. The cooling towers receive makeup water from the river.
- Auxiliary cooling water, which uses de-mineralized water treated for corrosion control, at 4.1 to 5.5 barg (60 to 80 psig) and 40.6 °C (105 °F), is available for small heat loads (e.g., control oil coolers). The pH is maintained at about 8.5.

Compressed Air:

- Instrument air filtered and dried to –40 °C (-40 °F) dew point at 5.5 to 6.9 barg (80 -100 psig) and 43 °C (110 °F) maximum.
- Service air at 5.5 to 6.9 barg (80 -100 psig) and 43 °C (110 °F) maximum.

Lube Oil:

- Lube oil from the conditioning system, with particulate matter removed to 10 μm or lower.

Hydrogen and Carbon Dioxide:

- H_2 and CO_2 for generator cooling and purging from storage.

Nitrogen:

- N_2 for equipment blanketing against corrosion during shutdown and lay-up.

Raw Water:

- Filtered river water. Additional water treatment will be included for potable water, etc.

Structures and Foundations:

Structures are provided to support and permit access to all plant retrofit components requiring support to conform to the site criteria. The structure(s) are enclosed if deemed necessary to conform to the environmental conditions.

Foundations are provided for the support structures, pumps, tanks, and other plant components. A soil-bearing load of 24,400 kg/m^2 (5,000 lbm/ft^2) is used for foundation design.

4.2.3 Project Scope

The boundary limit for these plants includes the complete plant facility within the "fence line." It encompasses all equipment from the coal pile to the busbar and includes the coal receiving and water supply systems and terminates at the high-voltage side of the main power transformers. For the Case-2 with CO_2 capture, the boundary also includes the gas processing system and air separation unit and terminates at the outlet flange of the CO_2 product pipe. It does not include the CO_2 pipeline to the EOR site or the CO_2 injection well. The scope of supply for the retrofit case (Case-2) is further defined by the following list.

- Oxygen supply system (cryogenic ASU)
- Gas processing system to produce the CO_2 product gas (Distillation type system)
- Existing boiler modifications to accommodate O_2 firing and CO_2 capture
- Site preparation and site improvements as required for added equipment
- Foundations, buildings, and structures required for all added plant equipment and facilities
- General support facilities for administration, maintenance and storage
- Plant electrical distribution, lighting, and communication systems
- Instruments and controls
- Miscellaneous power plant equipment

The electrical facilities within the retrofit scope include all control equipment, service equipment, conduit and cable trays, all wire and cable.

4.3 Case-1: Existing CFB Power Plant, Air Fired without CO_2 Capture (Base Case)

Case-1 represents the Base Case for this study. This case was included to provide a reference point for the comparison of performance & economic analyses results and also provides the existing plant definition to which the retrofit technology for O_2 firing and CO_2 capture are applied in Case-2.

Case-1 for this study is defined as the selected existing unit firing coal at full load, utilizing air as the oxidant, without capturing CO_2 from the flue gas. This existing plant utilizes a subcritical steam cycle with reheat (138 bara, 2,000 psia / 538 ^oC, 1,000 ^oF / 538 ^oC, 1,000 °F ; 7.6 cm Hga, 3.0 in Hga). This represents the "business as usual" operating scenario and is used as the basis of comparison for the retrofit CO_2 removal option investigated in this study (i.e., Case-2).

A brief performance summary for the Case-1 plant reveals the following information. The Case-1 plant produces a net plant output of 90,427 kW. The net plant heat rate and thermal efficiency are calculated to be 9,839 kJ/kWh (9,328 Btu/kWh) and 36.59 percent, respectively (HHV basis) for this case. Specific carbon dioxide emissions are about 0.88 kg/kWh (1.94 lbm/kWh).

4.3.1 Case-1: Development of CFB Boiler Computer Model

The first step in the development of a Base Case was to set up a computer simulation model of the existing CFB boiler. Using test data from the existing unit, the computer model was then calibrated. The calibrated boiler model was then used first for analysis of Case-1 (the Base Case) and then later the model was modified for analysis of Case-2 (the CO_2 removal concept).

A proprietary in-house computer model was used to simulate the performance of this existing CFB boiler. The first step in the calculation of unit performance is to set up a steady state performance computer model of the existing CFB steam generator unit. This involves calculating or obtaining all the geometric information for the steam generator unit as required by the Reheat Boiler Program (RHBP) as input data. The RHBP provides an integrated, steady state performance model of the Boiler Island including the steam generator unit, the air heater, and steam temperature control logic. The RHBP is used to size components and/or predict performance of existing components. In this study, since the existing boiler island component sizes are known, the RHBP was used exclusively for calculating unit performance.

The next step was to calibrate the RHBP model of the unit. This involves obtaining test data (with air firing) from the existing unit and "adjusting" the un-calibrated performance model with "calibration factors" to exactly match the test data. The test data required for calibration includes steam temperatures entering and leaving each major heat exchanger section in the unit, steam pressures, coal analysis, flue gas oxygen content, ambient conditions, etc. The "adjustments or calibration factors" for the model are in the form of "surface effectiveness factors" for the various heat exchanger sections throughout the unit.

Once calibrated, the boiler performance model (RHBP) can be provided with a variety of new inputs or boundary conditions such as new steam side requirements (mass flows,

temperatures, and pressures from the agreed upon MCR steam turbine material and energy balance). The RHBP is then run to predict new performance for the CFB steam generator unit. After completing the calibration process, the model was run and performance was calculated for Case-1 (the Base Case). Case-1 was run to match the MCR steam turbine heat balance.

4.3.2 Case-1: Boiler Island Process Description, Performance, and Equipment

The simplified gas side process flow diagram for the Case-1 (Base Case) Boiler Island is shown in Figure 4.2. The process description provided below briefly describes the function of the major equipment and systems included within the existing Boiler Island. Complete data for all streams shown in Figure 4.2 and the associated material and energy balance for this case are provided in Table 4.5.

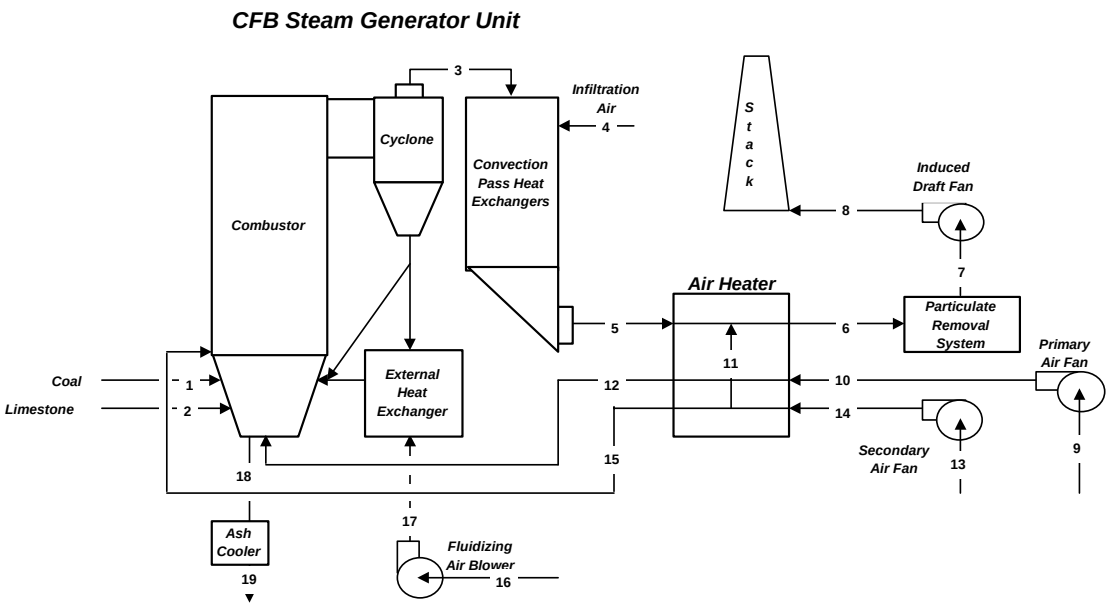

Figure 4.2: Case-1 (Base Case) Simplified Boiler Island Gas Side Process Flow Diagram

In this concept coal (Stream 1) and limestone (Stream 2) are reacted with preheated air (Streams 12, 15) in the combustor section of the existing Circulating Fluidized Bed (CFB) system. The combustor is a water-cooled refractory lined vessel designed to combust the fuel, capture SO_2 and to evaporate high-pressure steam. The air that flows to the combustor (Streams 12, 15, 17) is supplied from a primary air fan, a secondary air fan, and fluidizing air blowers. The products of combustion leaving the combustor flow through two cyclones where most of the entrained hot solids are removed and recirculated to the combustor. The solid stream leaving the bottom of each cyclone is split into two streams. Both streams ultimately are returned to the combustor. The first solids stream is an uncooled stream, which flows directly back to the combustor. The second solids stream flows through External Heat Exchangers (EHE's – 1 EHE per cyclone) where the solids are cooled before returning to the combustor. The External Heat Exchangers provide evaporator, superheat and reheat duty to the steam cycle.

Draining hot solids from the combustor through water-cooled ash coolers (Stream 18) controls solids inventory in the system while recovering heat from the hot ash. The cooling water used for the ash coolers is feedwater from the final extraction feedwater heater of the steam cycle.

The combustor temperature is 1580°F / 860°C. The temperature of Stream 3 is 1680°F / 916°C based on a 100°F increase due to afterburning in the cyclone.

The flue gas leaving the cyclones (Stream 3) is cooled in heat exchanger sections (superheater, reheater, economizer) located in the convection pass of the system, also by exchanging heat with the power cycle working fluid. The flue gas leaving the convection pass heat exchanger sections (Stream 5) is further cooled in the air heater. The flue gas leaving the air heater (Stream 6) is cleaned of fine particulate matter in a baghouse and enters the induced draft (ID) fan (Stream 7). The flue gas leaving the ID fan (Stream 8) is then discharged to the atmosphere through a common stack (shared by the three other identical units located on the existing site).

Table 4.5: Case-1 (Base Case) Boiler Island Gas Side Material and Energy Balance

SI Units

Constituent	(Units)	1	2	3	4	5	6	7	8	9	10	11	12	13	14	15	16	17	18	19
O2	(Kg/hr)	751		12219	774	12993	12993	12993	12993	50220	50220	0	50220	18708	18708	18708	7744	7744		
N2	"	424		254422	2566	256987	256987	256987	256987	166369	166369	0	166369	61975	61975	61975	25654	25654		
H2O	"	1437		14747	43	14790	14790	14790	14790	2808	2808	0	2808	1046	1046	1046	433	433		
CO2	"			79605		79605	79605	79605	79605											
SO2	"			173		173	173	173	173											
H2	"	1010																		
Carbon	"	21423																	428	428
Sulfur	"	865																	0	0
CaO	"																		2042	2042
CaSO4	"																		3306	3306
CaCO3	"		6076																0	0
Ash	"	8549	105																8654	8654
		Coal	Limestone	lue Gas to Bl	Infiltration Air	lue Gas to Al	lue Gas to PF	Flue Gas to ID	FGas from ID	Primary Air	Primary Air	AH Lkg Air	Primary Air	Secondary Ai	Secondary Ai	Secondary Ai	Fluidizing Air	Fluidizing Air	Ash Drain	Ash Drain
Total Gas	(Kg/hr)	0.00	0.00	361166	3383	364549	364549	364549	364549	219397	219397	0	219397	81730	81730	81730	33831	33831		
Total Solids	"	34459	6181																14431	14431
Total Flow	"	34459	6181	361166	3383	364549	364549	364549	364549	219397	219397	0	219397	81730	81730	81730	33831	33831	14431	14431
Temperature	(Deg C)	26.7	26.7	915.6	26.7	278.9	148.3	148.3	155.7	26.7	45.2	45.2	209.0	26.7	41.6	209.0	26.7	81.3	860.0	265.5
Pressure	(Bara)	1.014	1.014	1.014	1.014	1.004	0.994	0.963	1.014	1.014	1.201	1.201	1.188	1.014	1.163	1.150	1.014	1.634	1.014	1.014
h-sensible	(kJ/kg)	0.000	0.000	912.712	0.000	238.962	113.294	113.294	120.269	0.000	16.933	16.933	168.192	0.000	13.704	168.192	0.000	50.084	838.229	194.033
Energy																				
Chemical	(10^6 kJ/hr)	799.470																	12.618	12.618
Sensible	(10^6 kJ/hr)	0.000	0.000	329.640		87.113	41.301	41.301	43.844	0.000	3.715	0.000	36.901	0.000	1.120	13.746	0.000	1.694	12.096	2.800
Latent	(10^6 kJ/hr)	0.000	0.000	32.356	0.095	32.451	32.451	32.451	32.451	6.162	6.162	0.000	6.162	2.295	2.295	2.295	0.950	0.950	0.000	0.000
Total Energy(1)	(10^6 kJ/hr)	799.470	0.000	361.996	0.095	119.564	73.752	73.752	76.295	6.162	9.877	0.000	43.062	2.295	3.415	16.042	0.950	2.644	24.714	15.418

Notes:
(1) Energy Basis; Chemical based on Higher Heating Value (HHV); Sensible energy above 26.7C; Latent based on 2194 kJ/kg of water vapor

English Units

Constituent	(Units)	1	2	3	4	5	6	7	8	9	10	11	12	13	14	15	16	17	18	19
O2	(Lbm/hr)	1656		26938	1707	28645	28645	28645	28645	110717	110717	0	110717	41244	41244	41244	17072	17072		
N2	"	934		560907	5656	566563	566563	566563	566563	366782	366782	0	366782	136633	136633	136633	56557	56557		
H2O	"	3168		32512	95	32607	32607	32607	32607	6191	6191	0	6191	2306	2306	2306	955	955		
CO2	"	0		175501		175501	175501	175501	175501											
SO2	"	0		381		381	381	381	381											
H2	"	2226																		
Carbon	"	47230																	945	945
Sulfur	"	1907																	0	
CaO	"	0																	4503	4503
CaSO4	"	0																	7287	7287
CaCO3	"	0	13394																0	
Ash	"	18848	232																19080	19080
		Coal	Limestone	Flue Gas to BP	Infiltration Air	Flue Gas to AH	Flue Gas to PR	Flue Gas to ID	FGas from ID	Primary Air	Primary Air	AH Lkg Air	Primary Air	Secondary Air	Secondary Air	Secondary Air	Fluidizing Air	Fluidizing Air	Ash Drain	Ash Drain
Total Gas	(Lbm/hr)			796238	7459	803698	803698	803698	803698	483690	483690	0	483690	180184	180184	180184	74584	74584		
Total Solids	"	75969	13626		0	0	0	0	0										31815	31815
Total Flow	"	75969	13626	796238	7459	803698	803698	803698	803698	483690	483690	0	483690	180184	180184	180184	74584	74584	31815	31815
Temperature	(Deg F)	80	80	1680	80	534	299	299	312	80	113	113	408	80	107	408	80	178	1580	510
Pressure	(Psia)	14.7	14.7	14.7	14.7	14.6	14.4	14.0	14.7	14.7	17.4075	17.4	17.2	14.7	16.9	16.7	14.7	23.7	14.7	14.7
hsensible	(Btu/lbm)	0.000	0.000	436.792	0.000	114.359	54.219	54.219	57.557	0.000	8.104	8.104	80.491	0.000	6.558	80.491	0.000	23.968	401.147	92.858
Energy																				
Chemical	(10^6 Btu/hr)	843.488																	13.312	13.312
Sensible	(10^6 Btu/hr)	0.000	0.000	347.790	0.000	91.910	43.575	43.575	46.258	0.000	3.920	0.000	38.933	0.000	1.182	14.503	0.000	1.788	12.762	2.954
Latent	(10^6 Btu/hr)	0.000	0.000	34.138	0.100	34.238	34.238	34.238	34.238	6.501	6.501	0.000	6.501	2.422	2.422	2.422	1.002	1.002	0.000	0.000
Total Energy(1)	(10^6 Btu/hr)	843.488	0.000	381.928	0.100	126.148	77.813	77.813	80.496	6.501	10.420	0.000	45.433	2.422	3.603	16.925	1.002	2.790	26.075	16.267

Notes:
(1) Energy Basis; Chemical based on Higher Heating Value (HHV); Sensible energy above 80F; Latent based on 1050 Btu/Lbm of water vapor

4.3.3 Case-1: Boiler Performance Summary

The main steam flow used for Case-1 is 284,401 kg/hr (627,000 lbm/hr). This represents the maximum continuous rating (MCR) for the unit. The cold reheat flow leaving the high-pressure turbine for this case is 257,375 kg/hr (567,418 lbm/hr). The hot reheat flow, returning to the intermediate pressure turbine, for this case is also 257,375 kg/hr (567,418 lbm/hr). The inlet and outlet steam/water conditions supplied to and produced by the existing CFB steam generator unit are shown in Table 4.6 below.

Table 4.6: Case-1 (Base Case) Boiler/Turbine Steam Flows and Conditions

	SHO	FWI	RHO	RHI
(lbm/hr)	627000	627000	567418	567418
(kg/hr)	284401	284401	257375	257375
(psia)	2095	2500	451	481.7
(bara)	144.5	172.4	31.1	33.2
(deg F)	1005	460	1001	635
(deg C)	540	238	539	335
(Btu/lbm)	1474	443	1522	1322
(kJ/kg)	3080.3	924.6	3181.4	2761.8

Notes: SHO = Superheater Outlet
FWI = Feedwater Inlet
RHO = Reheater Outlet
RHI = Reheater Inlet

Neither the superheat nor reheat circuits require any de-superheating spray to maintain required steam outlet temperatures. The outlet steam temperatures are kept at required levels via solids flow control through the external heat exchangers with the de-superheating spray being used only for transients. The boiler was fired with about 20 percent excess air and the resulting boiler efficiency calculated for this case was about 89.46 percent (HHV basis) with an air heater exit gas temperature of 148 °C (299 °F).

4.3.4 Case-1: Steam Cycle Performance Summary

This section quantifies the existing steam cycle performance for this study. It is important to quantify the steam cycle performance for the Base Case because there will be some changes in the steam cycle performance for Case-2 (O_2 firing & CO_2 capture) where there is some low-level heat integration involved.

The steam cycle for Case-1 (Base Case) is shown schematically in Figure 4.3. The high-pressure turbine expands about 284,401 kg/hr (627,000 lbm/hr) of steam at 138 bara (2,000 psia) and 538 C (1,000 F). Reheat steam is returned to the intermediate pressure turbine at 29.5 bara (428 psia) and 538 C (1,000 F). These steam conditions (temperatures, pressures) represent common steam cycle operating conditions for existing utility scale CFB power generation systems in use today. The condenser pressure used in this study was 7.6 cm Hga (3.0 in Hga). The steam turbine performance analysis results show the generator produces 97,758 kW output and the steam turbine heat rate is about 8,362 kJ/kWh (7,928 Btu/kWh). Figure 4.4 shows the associated T-S and H-S diagrams

for the existing steam cycle state points. More details are given in Section 4.4.6.

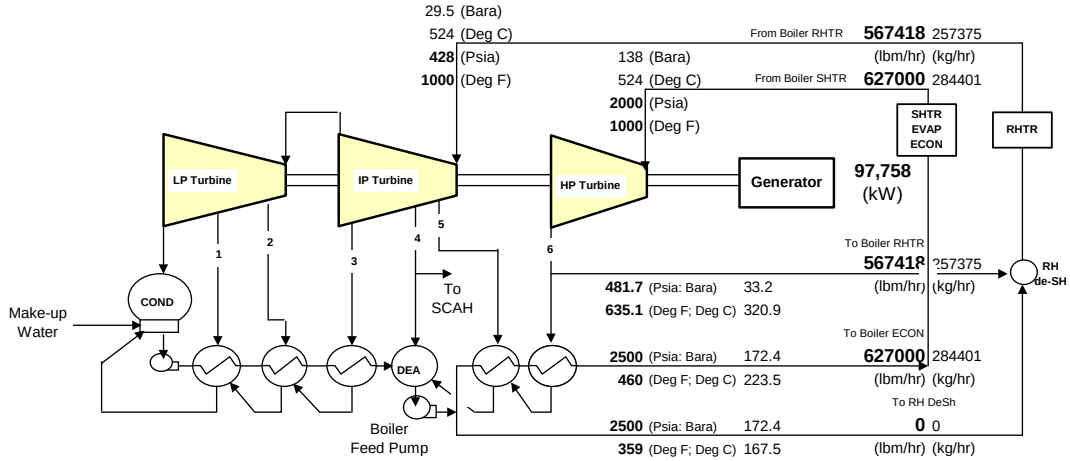

Steam Cycle Energy Balance

Energy Outputs	(10^6 Btu/hr)	(10^6 KJ/hr)	Energy Inputs	(10^6 Btu/hr)	(10^6 KJ/hr)	Turbine Heat Rate
Steam Turbine Power Output	340.1	358.7	Boiler Heat Input	760.8	802.4	7928 (Btu/kwhr)
SCAH Heat Output	0.0	0.0	BFP & CP Input	6.2	6.5	8362 (KJ/kwhr)
Condenser Loss	426.8	450.2	**Total Energy Input**	766.9	809.0	
Total Energy Output	766.9	809.0	**In - Out**	0.0	0.0	

Figure 4.3: Case-1 Simplified Steam Cycle Diagram and Performance

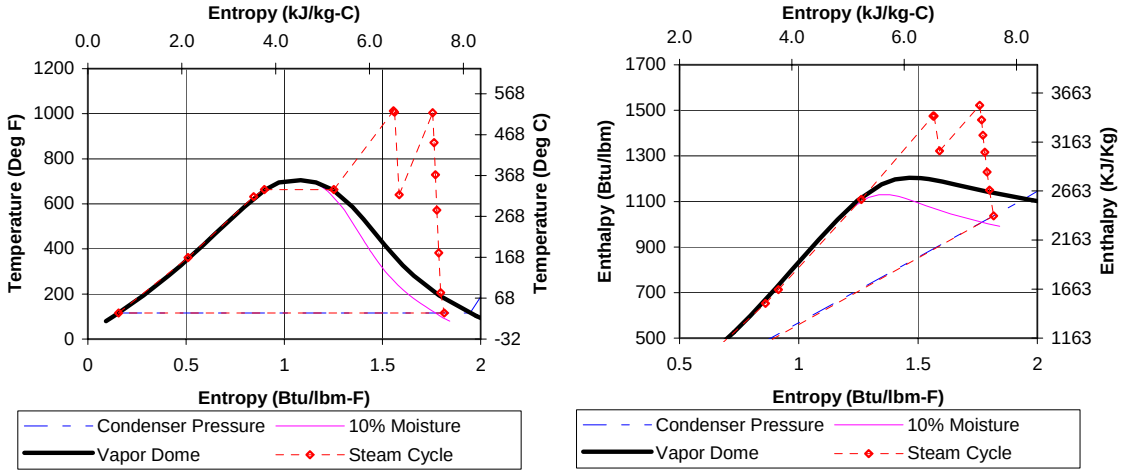

Figure 4.4: Case-1 Steam Cycle State Points Shown on T-S and H-S Coordinates

4.3.5 Case-1: Overall Plant Performance and CO_2 Emissions Summary

A brief performance summary for this existing plant is summarized in Table 4.7 and reveals the following information. The Case-1 plant produces a net plant output of about 90.4 MWe. The boiler efficiency is about 89.5 percent (HHV basis) and the steam cycle efficiency is about 43.1 percent. The net plant heat rate and thermal efficiency (HHV basis) are calculated to be about 9,800 kJ/kWh (9,300 Btu/kWh) and 36.6 percent,

respectively for this case. Specific carbon dioxide emissions are about 0.88 kg/kWh (1.94 lbm/kWh).

Table 4.7: Case-1 Overall Plant Performance Summary (Base Case)

		Case-1: Air Fired CFB (Base-Case) w/o CO_2 Capture	
Auxiliary Power Listing			
Power Plant Auxiliary Power	**(Units)**	**(English)**	**(SI)**
Induced Draft Fan	(kW)	827	827
Primary Air Fan	(kW)	1209	1209
Secondary Air Fan	(kW)	364	364
Fluidizing Air Blowers	(kW)	551	551
Coal Handling, Preparation, and Feed	(kW)	136	136
Limestone Handling and Feed	(kW)	94	94
Limestone Blower	(kW)	71	71
Ash Handling	(kW)	95	95
Particulate Removal System Auxiliary Power (baghouse)	(kW)	182	182
Boiler Feed Pump	(kW)	1798	1798
Condensate Pump	(kW)	108	108
Circulating Water Pumps	(kW)	623	623
Cooling Tower Fans	(kW)	623	623
Steam Turbine Auxiliaries	(kW)	94	94
Misc. Auxiliary Power (Controls, Lighting, HVAC etc.)	(kW)	336	336
Transformer Loss	(kW)	220	220
Subtotal	(kW)	7331	7331
	(frac. of Gen. Output)	0.075	0.075
Auxiliary Power Summary			
Power Plant Auxiliary Power	(kW)	7331	7331
Air Separation Unit - ASU	(kW)	n/a	n/a
Gas Processing System - GPS (CO_2 purification, compression, liquefaction)	(kW)	n/a	n/a
Total Plant Auxiliary Power	(kW)	7331	7331
	(frac. of Gen. Output)	0.075	0.075
Steam Flows, Efficiencies and Electrical Outputs			
Main Steam Flow	(lbm/hr; kg/hr)	627000	284401
Reheat Steam Flow	(lbm/hr; kg/hr)	567418	257375
Boiler Efficiency (HHV)[1]	(fraction)	0.8946	0.8946
Steam Cycle Efficiency	(fraction)	0.4305	0.4305
Steam Turbine Generator Output	(kW)	97758	97758
Net Plant Output	(kW)	90427	90427
[1] Boiler Heat Output / (Qcoal-HHV + Qcredits)	(frac. of Case-1 Net Output)	1.00	1.00
Fuel Heat Inputs			
Coal Heat Input (HHV)	(10^6 Btu/hr; 10^6 KJ/hr)	843	890
Natural Gas Heat Input (HHV)[2]	(10^6 Btu/hr; 10^6 KJ/hr)	n/a	n/a
Total Fuel Heat Input (HHV)	(10^6 Btu/hr; 10^6 KJ/hr)	843	890
[2] Required for GPS & ASU Desiccant Regeneration in Case 2			
Overall Plant Efficiency			
Net Plant Heat Rate (HHV)	(Btu/kwhr; KJ/kwhr)	9328	9839
Net Plant Thermal Efficiency (HHV)	(fraction)	0.3659	0.3659
Normalized Thermal Efficiency (HHV; Relative to Base Case)	(fraction)	1.00	1.00
Energy Penalty	(fraction)	0.00	0.00
CO_2 Emissions			
CO_2 Produced	(lbm/hr; kg/hr)	175501	79605
CO_2 Captured	(lbm/hr; kg/hr)	0	0
Fraction of CO_2 Captured	(fraction)	0.000	0.000
CO_2 Emitted	(lbm/hr; kg/hr)	175501	79605
Specific CO_2 Emissions	(lbm/kwhr; kg/kwhr)	1.94	0.88
Normalized Specific CO_2 Emissions (Relative to Base Case)	(fraction)	1.00	1.00
Avoided CO_2 Emissions (as compared to Base Case)	(lbm/kwhr; kg/kwhr)	0.00	0.00

4.4 Case-2: Existing CFB Power Plant Retrofit with Oxygen Firing and CO_2 Capture

The basic CO_2 capture concept behind Case-2 is to replace combustion air with a mixture of oxygen and recycled flue gas thereby creating a high CO_2 content flue gas stream as shown in Figure 4.5. Using relatively pure oxygen and recirculated flue gas as an oxidant stream instead of air eliminates most of the atmospheric nitrogen and therefore the flue gas consists of primarily CO_2 and H_2O. The flue gas stream can be further processed, (i.e., through rectification or distillation, depending on the CO_2 product specification) into a high purity CO_2 end product for various uses such as EOR, as was assumed in this study, EGR, or simply dried and compressed for sequestration.

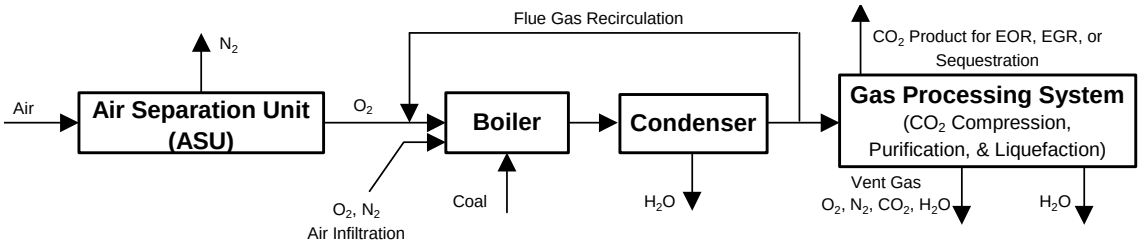

Figure 4.5: Simplified O_2 Fired Concept Diagram

A brief performance summary for Case-2 plant reveals the following information. The Case-2 plant produces a net plant output of about 62.1 MWe. The boiler efficiency is about 88.8 percent (HHV basis) and the steam cycle efficiency is about 41.2 percent. The net plant heat rate and thermal efficiency are calculated to be about 14,600 kJ/kWh (13,900 Btu/kWh) and 24.6 percent respectively (HHV basis) for this case. Specific carbon dioxide emissions are about 0.08 kg/kWh (0.17 lbm/kWh).

4.4.1 Case-2: Existing Power Plant Modifications

This section provides a review of the equipment changes made to the existing air fired CFB power plant (Case-1) in order to accommodate the retrofit of the unit to oxygen firing for the purpose of CO_2 capture (Case-2). This retrofit represents a power plant consisting of the following major equipment groups:

- An existing Circulating Fluidized Bed (CFB) boiler modified to accommodate oxygen-firing
- A new cryogenic type Air Separation Unit (ASU) to provide O_2 to the CFB boiler for combustion of the fuel
- An existing subcritical steam cycle with reheat [~ 100 MWe-gross: 138 bara (2,000 psia) / 538 °C (1,000 °F) / 538 °C (1,000 °F) / 7.6 cm Hga (3.0 in. Hga)] modified to accommodate low level heat recovery from the new ASU.
- A new Gas Processing System (GPS) designed to purify, compress, and liquefy the high CO_2 content flue gas produced by the CFB boiler to conditions acceptable for an EOR application.
- Balance of plant equipment (existing) including coal, sorbent and ash handling, cooling water system, electrical systems, etc.

The following two subsections describe the modifications to the boiler island and steam cycle for Case-2 to accommodate this retrofit.

Boiler Island Equipment Modifications and Additions:

The CFB boiler performance and retrofit equipment design is based on current CFB equipment design practices and on new information obtained from the pilot scale testing and data analysis discussed previously in Section 3. Boiler island modifications to the existing CFB unit to accommodate O_2 firing and CO_2 capture involve relatively minor modifications to the boiler, draft system, desulfurization system, and controls and instrumentation. The basic modifications required in these areas are discussed below.

Modified Boiler:

The Boiler Island should be inspected for potential air leaks into the system and should be sealed to minimize any air infiltration. Special attention should be given to all penetrations including seal boxes for convective surfaces, access doors, fuel piping, sootblowers, ductwork, dampers, expansion joints, and fans. Modifications to the existing boiler pressure parts are not required.

Modified Draft System:

The draft system comprises all the fans and blowers (primary air fan, secondary air fan, fluidizing air blowers, and induced draft fan), ductwork, dampers, expansion joints, etc., that supply air to and remove flue gas from the unit. This system must be modified such that the boiler can operate in the air-fired mode for start-up and in the new oxygen-fired mode with gas recirculation. The system also must be flexible enough to allow the on line transition from air to oxygen firing.

Vendors for the existing fans and blowers were contacted regarding the capability of this equipment to operate satisfactorily with the different gas analyses and other conditions expected with O_2 firing.

Fans and Blowers:

The forced draft system (PA & SA fans, FA Blowers) will be handling recirculated flue gas rather than air during O_2 fired operations. The recirculated flue gas has a higher molecular weight (more CO_2 and less N_2) and a higher inlet temperature to the fans and blowers than air. The recirculated flue gas even with the higher inlet temperature to the fans has an increased density. Taking all these differences into consideration, the vendors have stated that the existing primary air fan, secondary air fan, and fluidizing air blowers (FBHE and Seal Pot blowers) will easily accommodate the new operating conditions expected with O_2 firing.

Although the ID fan will also be handling the increased density flue gas, it must now additionally accommodate a larger pressure rise across the fan. The increased system draft loss is due primarily to the addition of the flash dryer absorber (FDA) system for SO_2 removal. Because of the increased draft losses, a new ID fan and motor are required.

An additional benefit of the higher molecular weight gas is that the draft system fans and blowers will consume less power (~22 percent less in total) as compared to the equivalent MCR operating condition with air firing. Some of this reduction results from introducing the oxygen from the ASU downstream of the PA and SA fans and some results from the reduction in inlet temperature for the ID fan. Even though the ID fan must handle more

mass flow and a higher pressure rise with O_2 firing, because the inlet temperature with O_2 firing is so much lower than with air firing, the power requirement is significantly lower with O_2 firing as compared to air firing. Partially offsetting these reductions is the slightly higher inlet temperatures to the PA, SA, and fluidizing air blowers.

New and Modified Ductwork:

Significant modifications and additions were required to the existing plant ductwork system in order to accommodate the new gas recirculation system, FDA system, and the addition of O_2 firing capability as described below. New ductwork is required in several areas of the Boiler Island. Oxygen supply control valves and piping from the new ASU to the existing primary and secondary air fan outlet ducts is required. New ductwork with control and isolation dampers are also required for the recycle flue gas streams that feed the primary and secondary air fans and the existing fluidizing air blowers. Ductwork is also modified to accommodate the new FDA system. Additionally, new ductwork and dampers are required to supply product gas (primarily CO_2) to the new Gas Processing System. Various isolation dampers are also required. Provisions in the new ductwork system to accommodate startup with air firing (air inlet duct with associated isolation dampers) are also required.

Refer to Table 4.8 for the associated cross-sectional areas and other ductwork design requirements for this system. Figure 4.6 shows a rough sketch of the new gas recirculation and oxygen supply ductwork and where it is located with respect to the existing boilers. Figure 4.7 shows the new Ductwork Arrangement Drawing for the new gas recirculation system and the O_2 supply system to the boiler. Additional drawings for the retrofit case are given in Section 7.1.

Table 4.8: Case-2 Ductwork Design Requirements

Description	Item	Qty	Design Velocity		Req'd Area Each		Operating Temperature		Design Temperature		Duct Pressures					
											Normal		Design (positive)		Design (negative)	
			(ft/min)	(m/min)	(ft2)	(m2)	(Deg F)	(Deg C)	(Deg F)	(Deg C)	(in wg)	(cm wg)	(in wg)	(cm wg)	(in wg)	(cm wg)
Recirculated Gas																
GR duct from stack duct	A1	1	2500	762	52.7	4.90	112	44	150	66	2	5	8	20	8	20
Duct to PA Inlet	A2	1	2500	762	32.4	3.01	112	44	150	66	0	0	8	20	8	20
Duct to SA Inlet	A3	1	2500	762	12.9	1.20	112	44	150	66	0	0	8	20	8	20
Blower Header Duct	A4	1	2500	762	7.9	0.73	112	44	150	66	-1	-3	8	20	8	20
Header to FBHE Blower Inlets	A5	1	2500	762	5.4	0.50	112	44	150	66	-2	-5	8	20	8	20
Header to FBHE Blower Inlet	A6	2	2500	762	5.4	0.50	112	44	150	66	-3	-8	8	20	8	20
Header to Sealpot Blower Inlets	A7	1	2500	762	2.9	0.27	112	44	150	66	-4	-10	8	20	8	20
Header to Sealpot Blower Inlet	A8	2	2500	762	1.4	0.13	112	44	150	66	-4	-10	8	20	8	20
Air																
Startup air inlet duct	B1	1	2500	762	75	6.97	100	38	150	66	-2	-5	8	20	8	20
Oxygen																
Oxygen from O2 plant	C1	1	2500	762	9.3	0.86	65	18	100	38	110	279	90	229	8	20
Oxygen to PA fan outlet	C2	1	2500	762	6.7	0.62	65	18	100	38	85	216	70	178	8	20
Oxygen to SA fan outlet	C3	1	2500	762	2.7	0.25	65	18	100	38	85	216	60	152	8	20

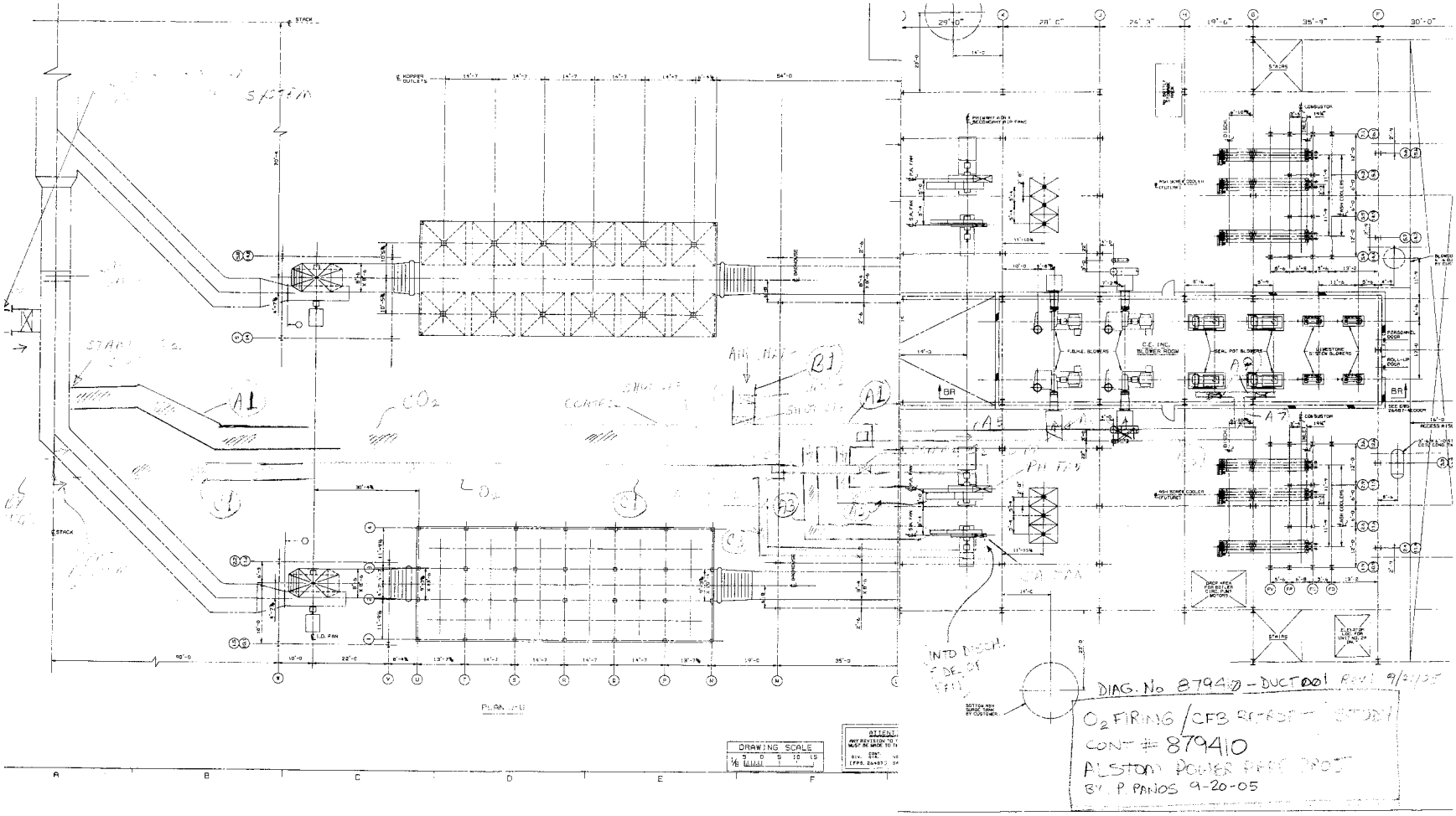

Figure 4.6: New Gas Recirculation and Oxygen Supply Ductwork Sketch

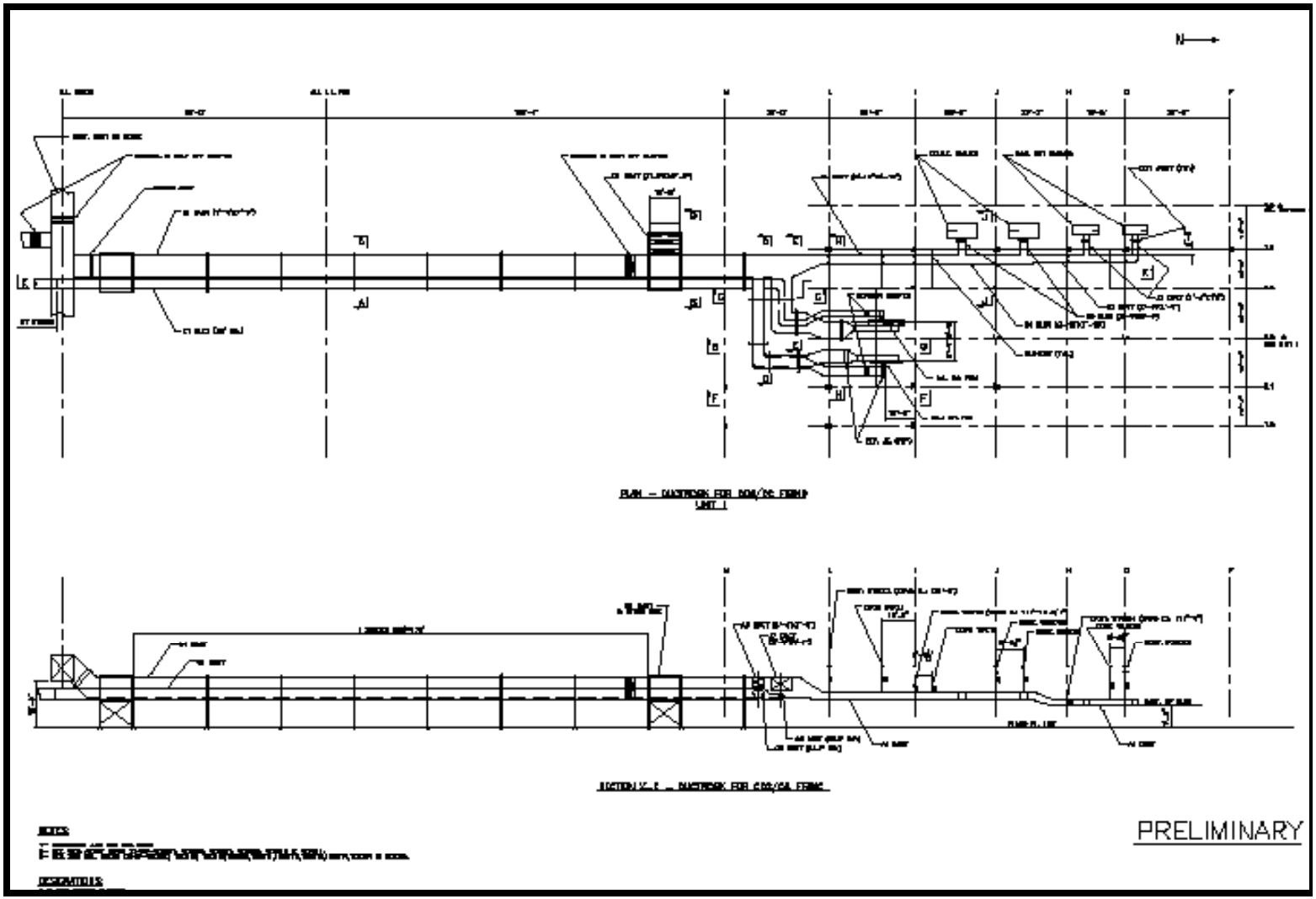

Figure 4.7: Case-2 New Ductwork Arrangement Drawing

Modified Controls and Instrumentation for the Boiler:

Additional controls and instrumentation will be required for the new components and systems. The transition between air firing and oxygen firing as well as additional safety precautions associated with oxygen use in this type of setting needs careful consideration.

The following is a description of the process controls required to start up, increase and reduce load, and shut down a circulating CFB that has been converted to O_2 firing and CO_2 capture.

In general terms, the unit will be started up on air firing as it normally is, with the exception that all flue gas desulfurization will take place at the outlet of the boiler in the new FDA system. The unit will be switched to oxygen firing at any point between the minimum load on O_2 firing and 100% load. It will operate on oxygen firing at high loads. The exact minimum load capability with O_2 firing was not determined for the study unit since it was beyond the scope of the current study but it is expected to be in the 50-75% range. As the unit is brought down in load, a load hold will be initiated and the unit will be switched back to air firing above the minimum O_2 fired load.

Please refer to the Duct and Damper P&ID Schematic (Figure 4.8) for the location of control and shutoff dampers as well as the locations for various sensors identified in the following description. The thick red lines on this figure indicate the new ductwork, dampers, equipment, and instrumentation required for this retrofit.

The following are new ducts that make up the oxygen firing system

1. Short duct section to convey the CO_2 flue gas to the Gas Processing System (GPS) from the duct that connects ID fan outlet to the stack
2. Fan Header duct for CO_2 rich flue gas from duct that connects ID fan outlet to the stack to the inlet of the fans and blowers (A-1)
3. Short duct section for air from atmosphere to the new header duct, with inlet silencer (B-1).
4. Duct for oxygen from the Air Separation Unit (ASU) to the PA Fan outlet, upstream of the air heater (C-2).
5. Duct for oxygen from air separation unit to the SA fan outlet, upstream of the air heater (C-3).

The following new dampers make up the oxygen firing control system:

1. One isolation (V-9) and one control damper (V-10) in duct between ID Fan and Stack, to isolate stack from ID fan and Gas Processing System
2. One isolation (V-12) and one control damper (V-11) in the duct to the Gas Processing System (GPS), to isolate, control, or connect the boiler flue gas to the GPS
3. One isolation (V-1) and one control damper (V-2) in the header duct from the ID fan-to-Stack duct, upstream of the atmospheric dampers.
4. One isolation damper (V-6) and control damper (V-5) in the atmospheric air duct to the header duct, to control the air to the boiler during air firing and combination air and oxygen firing.

5. One control damper (V-7) in the duct from the air separation unit (ASU) to the PA fan outlet, to provide and control oxygen content to the PA during oxygen firing
6. One control damper (V-8) in the duct from Air Separation Unit (ASU) to the SA fan outlet, to provide and control oxygen content to the SA during oxygen firing
7. One isolation damper each (V-3 and V-4) to the two external heat exchanger blowers, to isolate either blower when not in use.

The following is new instrumentation required for the control of the oxygen firing system:

1. An O_2 meter in the PA duct downstream of the air heater in order to control the oxygen in the PA duct.
2. An O_2 meter in the SA duct downstream of the air heater in order to control the oxygen in the SA duct.
3. A pressure sensor in the CO_2 header duct, downstream of the isolation and control campers (V-1 and V-2), in order to control the pressure in the header duct as the atmospheric dampers are closed or opened
4. A CO_2 and an O_2 measurement device in the duct to the FBHE and sealpot blowers, to provide compensation for the use of CO_2 and oxygen versus air to the blower flow measurement device

The following steps are to be taken for start-up and switching to oxygen firing:

1. Start-up boiler on air firing. The oxygen firing dampers are lined up as follows for air firing:
   - Isolation and control dampers to Gas Processing System are shut (V-11 & V-12)
   - Isolation damper and control dampers from atmosphere to main header duct are open (V-5 & V-6)
   - Isolation and control dampers between the ID fan-to-Stack duct and the Air fan inlets are shut (V-9 & V-10)
   - Control dampers for oxygen from Air Separation Unit (ASU) to PA and SA fan outlets are both closed (V-7 & V-8)
   - The Isolation damper to either one or both of the FBHE blowers (V-3 or V-4) are opened
2. Start the boiler as usual and bring the boiler to near full load (90% to 100%).
3. Switching over to O_2 firing is accomplished as follows:
   - Assure that oxygen from the air separation unit is available
   - Release oxygen control dampers V-7 and V-8 to control oxygen in the PA and SA ducts to the furnace at 24%
   - Open isolation damper V-1 to permit flow of flue gas to the boiler, and release V-2 to control header duct pressure P_h to the same value it was (about a negative 0.5 in wg).

- Begin slowly closing atmospheric air control damper V-5. As V-5 closes, V-2 will begin to open to control P_h. At the same time, V-7 and V-8 will begin to control oxygen in the PA and SA ducts. Boiler O_2 at the economizer outlet will control the SA fan, and the ratio controller will control the PA to SA ratio to remain the same as it was at the beginning of the switchover to oxygen firing.
- The flue gas will become richer in CO_2 and leaner in nitrogen as the atmospheric damper is closing. When the atmospheric air control camper (V-5) is closed, shut the atmospheric air isolation damper, V-6. A this point the unit is switched to oxygen firing, and the PA to SA ratio controller can be released or held as desired. The header pressure, P_h, setpoint can also be changed.
- As the boiler is switching to oxygen firing and the composition of the gas used for fluidizing the FBHE changes, the controls will provide compensation to the flow setpoints of the FBHE and sealpot fluidizing air blowers. This is done in order to maintain the fluidizing velocity constant, by measuring the CO_2 and O_2 in the header duct.

4. The flue gas is now ready to be switched from the stack to the GPS for CO_2 capture. This switch is accomplished as follows:

- Open the isolation damper to the GPS, V-12.
- Slowly open the control damper to the GPS, V-11.
- After V-11 is fully open, begin slowly closing V-10.
- When V-10 is shut, close the stack isolation damper V-9
- The unit is now fully on oxygen firing and providing CO_2 rich flue gas to the Gas Processing System.

To switch back to air firing, reverse this procedure with the following exception: during the switch from CO_2 recycle to air firing, air control damper V-5 will control header duct pressure, P_h, and flue gas recycle damper V-2 will be set to open gradually.

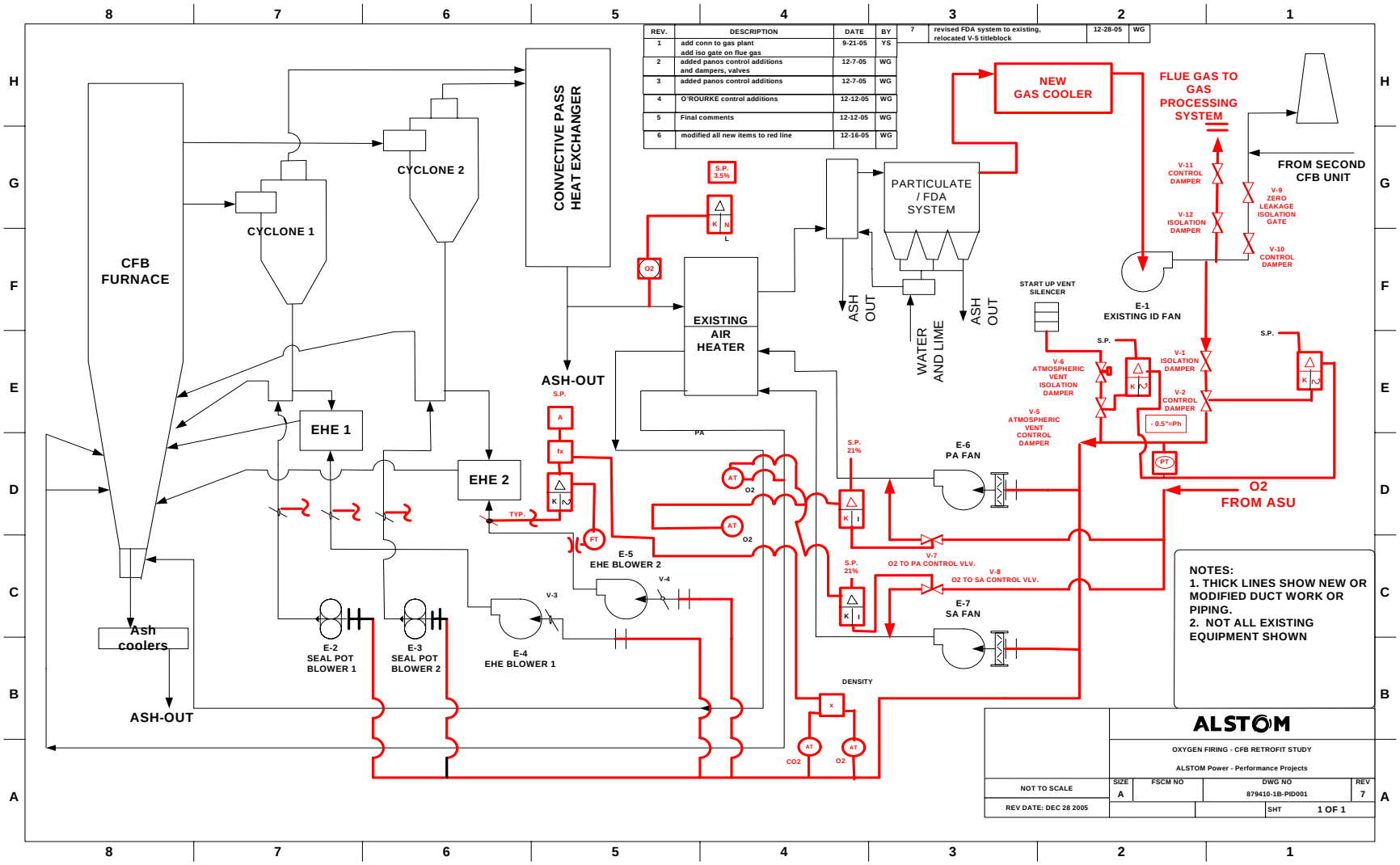

Figure 4.8: Case-2 New Duct and Damper P&ID Schematic

Modified Desulfurization System:

The existing unit, Case-1, a traditional furnace limestone injection system is used to remove about 90 percent of the SO_2 produced. For the oxygen fired Case-2, limestone is not added to the furnace. Rather, sulfur capture is done in a backend Flash Dryer Absorber (FDA) system with lime injection. The issues and options for sulfur capture with oxygen firing are discussed in Section 4.4.3.

The FDA system is a dry SO_2 removal process, which operates in a humid flue gas condition. The heart of the FDA system is the patented mixer/humidifier. The equilibrium moisture content in the ash received from the fabric filter is increased a few percent by the addition of water. The mixer uniformly distributes the water into the entire collected ash stream prior to re-injection into the flue gas. The humidified solids in the mixer continue to behave as a free-flowing powder, without clumping, enabling even distribution of the moist powder into the flue gas for SO_2 absorption. The blending of the fresh lime, water, and recycle product is done externally from the flue gas. This ensures a homogeneous mixture prior to injection back into the flue gas stream.

The typical end product is a dry powder consisting of a mixture of fly ash, calcium sulfite/sulfate, hydroxide, carbonate, chloride, etc.

Figure 4.9 shows a simplified schematic process diagram of the FDA system. In the current application the existing baghouse is used with modifications as required for the addition of the FDA system.

Flue gas leaving the existing air heater, with a high SO_2 content enters the reactor section prior to entering the fabric filter. Here, a mixture of recirculated ash, fresh lime and water are injected into the flue gas stream and most of the SO_2 reacts with the lime to form $CaSO_3 \cdot ½ H_2O$. Some $CaSO_4 \cdot 2H_2O$ is formed and a small amount of $CaCO_3$ is also formed. The particulate matter is collected in the modified existing fabric filter. A portion of the collected particulate is removed as the waste product stream with the remainder of the particulate matter being recirculated as described previously. Water is added to control the humidity of the flue gas stream leaving the fabric filter to a proper level. Fresh lime is also added. FDA systems are commercial products that ALSTOM has supplied for both air-fired CFB and pulverized coal fired units.

Because of the high CO_2 content in the flue gas with oxygen firing, there is less confidence in the FDA performance predictions for Case-2 than for air firing. Various performance assumptions were made based on test results that were developed as a part of this project (refer to Section 3) and these assumptions used to develop the FDA system performance used for Case-2.

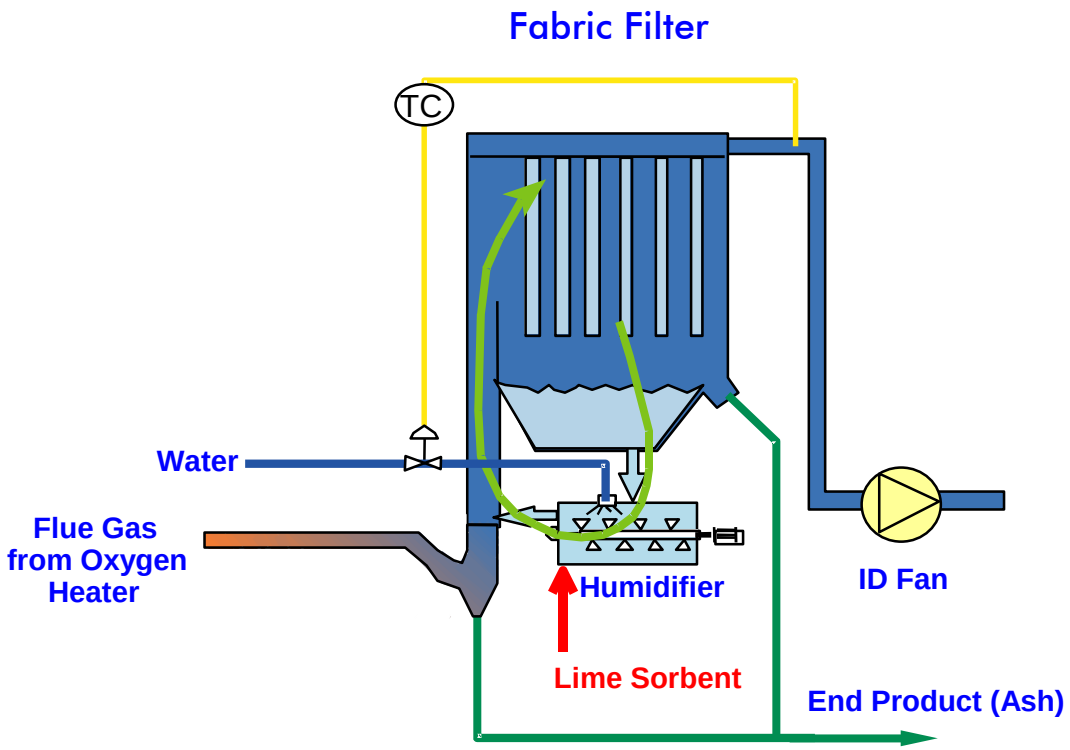

Figure 4.9: Flash Dryer Absorber (FDA) System Schematic Diagram (simplified)

Addition of the new FDA system will require the following basic modifications:

- Modifications to the existing Fabric Filter (FF) hoppers for airslide attachments
- Elevation of the FF to accommodate the FDA system and its components
- Modification of the existing FF inlet duct for connection to the FDA outlet
- Modification of the existing duct leaving the air heater for connection to the FDA system
- Internal coating of the FF outlet duct and tube sheet to mitigate moisture corrosion
- Modification to the ash handling system

A general arrangement sketch (not to scale) of the FDA system design is shown in Figure 4.10. The dimensions shown on the drawing are in units of feet and the major components are identified on this sketch.

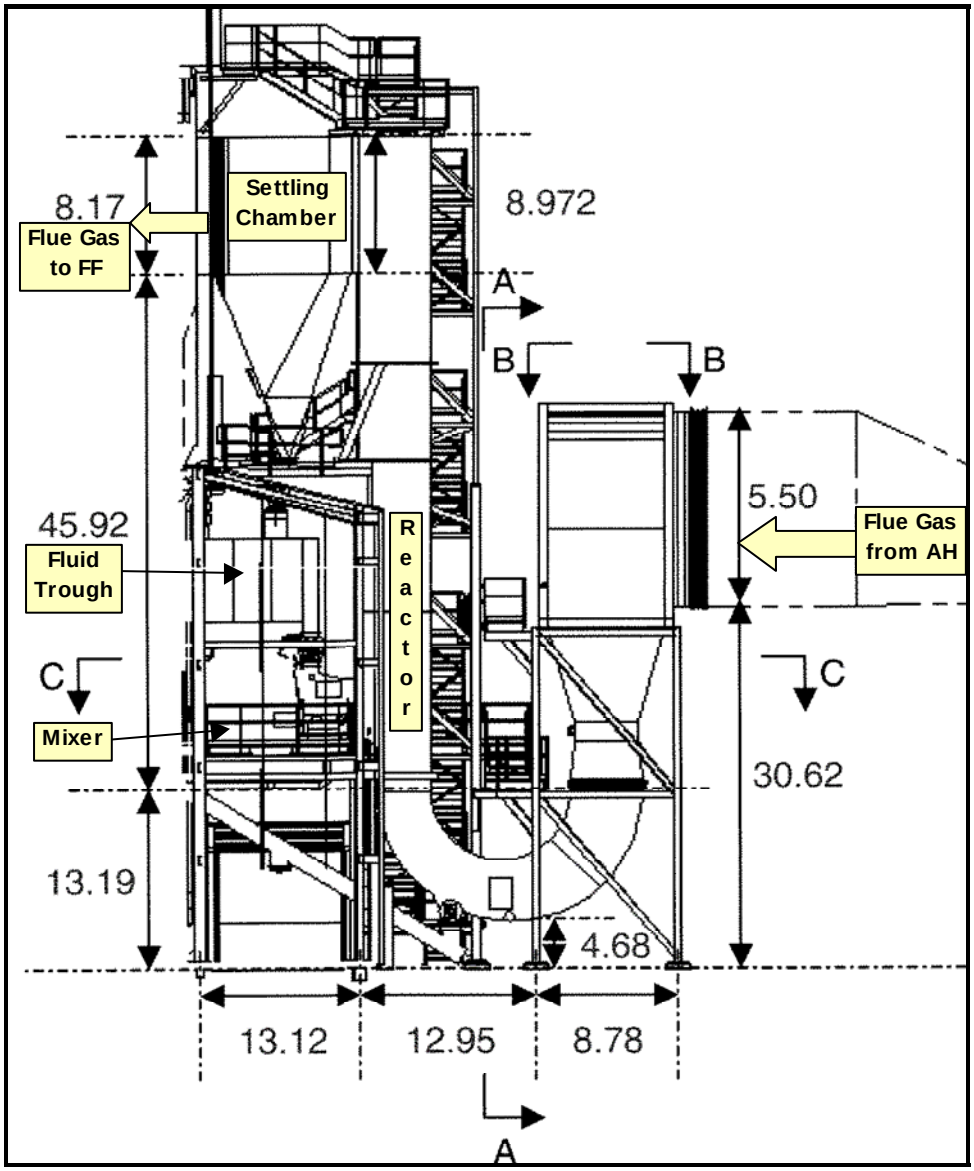

Figure 4.10: Case-2 New Flash Dryer Absorber (FDA) System General Arrangement Sketch

(not to scale - dimensions in ft)

General Arrangement Drawings:

Complete general arrangement drawings of the modified Case-2 CFB boiler were not developed for this project since the only modifications to the boiler were the addition of and modifications to boiler ductwork (i.e., new gas recirculation system, new O_2 supply piping, new product gas supply system to GPS, etc). Drawings of the new ductwork are contained in Appendix I: Plant Drawings (Section 7.1). These drawings highlight the new ductwork required for the existing unit to accommodate O_2 firing and CO_2 capture

Case-2 Steam Cycle Equipment Modifications and Additions:

In Case-2, a low level heat recovery system is integrated with the existing steam cycle.

Most of the low-pressure condensate stream leaving the existing condensate pump bypasses the existing extraction feedwater heaters #1 and #2 as shown in Figure 4.11 below. The heat added to the condensate stream is provided through the recovery of low level heat rejected from the three ASU main air compressor aftercoolers. This heat integration allows the existing steam turbine to generate additional power output since extractions to the existing feedwater heaters are reduced and more steam flows through the low pressure stages of the existing turbine. Consequently, the condenser also rejects more heat.

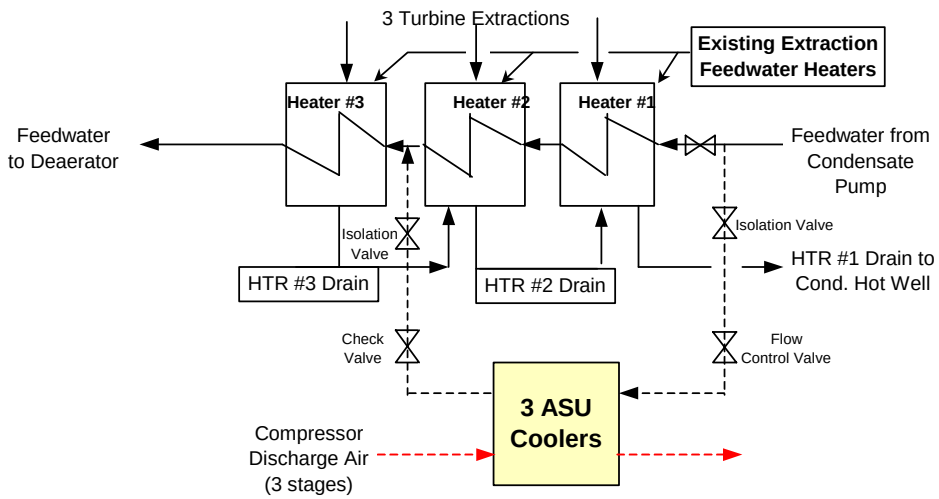

Figure 4.11: Case-2 Low Level Heat Recovery System Schematic

4.4.2 Case-2: Oxygen Fired CFB Boiler Computer Model

The boiler system computer model (RHBP; see Section 4.3.1) developed and calibrated for Case-1 was checked for applicability with O_2 firing and used, with modified input data, to simulate the O_2 fired boiler performance of Case-2. With oxygen firing, a high carbon dioxide content flue gas is produced. Table 4.9 shows a comparison between the air and O_2 fired flue gases leaving the cyclones and entering the convective pass from this study.

Table 4.9: Air and Oxygen Fired Flue Gas Comparison

Constituent	(Units)	Air	Oxygen
O_2	(vol. frac.)	0.0316	0.0316
N_2	"	0.7509	0.0471
H_2O	"	0.0677	0.1070
CO_2	"	0.1496	0.8108
SO_2	"	0.0002	0.0035

The O_2 fired flue gas has significantly higher CO_2 and H_2O contents and much lower N_2 content than the air fired flue gas. The SO_2 content while small is also increased

significantly with O_2 firing. These differences cause the O_2 fired flue gas to have significantly different physical and thermal properties as compared to the air fired flue gas. These gas property differences cause considerable differences in the heat transfer processes, which occur within the steam generator unit.

The CFB boiler computer model (RHBP) accounts for two modes of heat transfer in the convective pass of the unit (non-luminous radiation and convection). Investigation of the non-luminous radiation formulations within the RHBP indicated that current equations, based on the "Hottel curves," (Hottel and Sarofim, 1967) would be accurate and formulation modifications to the RHBP would not be required. The convection formulations used in the RHBP were also checked and were found to also have the capability of accurately analyzing convective heat transfer for flue gases of the analyses typical with O_2 firing. After checking these heat transfer items and providing the RHBP with the proper input data for this O_2 fired case, the model was run to simulate the boiler performance for Case-2.

With the increased heat transfer rates typically associated with oxygen firing and with similar steam temperature profiles (as compared to air firing), there is potential for high metal temperatures especially within rear pass heat exchangers of the study unit. Another proprietary in-house computer program, the Metal Temperature Program (MTP), was utilized to investigate this issue. The MTP, using thermal inputs from the RHBP, calculates steam and metal temperatures at any selected point along the length of a tube. All tubes or selected tubes of any given heat exchanger bank can be modeled. This program was used to insure no design limits were exceeded.

4.4.3 Case-2: Boiler Island Process Description, Performance, and Equipment

This section describes the Boiler Island processes for Case-2 and includes a simplified process flow diagram (PFD), and material and energy balance.

The basic CO_2 capture concept behind Case-2 is to replace combustion air with oxygen thereby creating a high CO_2 content flue gas stream that can be further processed into a high purity CO_2 end product for various uses such as EOR as was assumed for this study or sequestration. To accommodate this concept in an existing CFB unit, the basic idea is to provide the proper amount of flue gas recirculation such that the O_2 fired CFB unit operates as similar as possible to the air firing mode.

Specific Assumptions implemented for Case-2:

The following four subsections describe areas where key assumptions were made for the analysis of the oxygen fired CFB power plant study (Case-2). The key assumptions can be categorized as either assumed process variable values or as assumed process equipment arrangements. These subsections discuss the values used for these assumed process variables or the modified system arrangements used. Additionally, the rationale for the use of these process values or modified system arrangements is also discussed.

Oxygen Content in Oxidant Stream to Furnace:

The oxygen fired Case-2 performance simulations were done with local oxygen content in the oxidant streams for combustion (Streams 16 and 20 in Figure 4.13) of about 24 percent by volume with the remainder as recirculated flue gas. This quantity of

recirculated flue gas provides a superficial gas velocity in the combustor that is slightly lower than what was used in Case-1 with air firing. However, because of the higher density of the flue gas (due to the high CO_2 content and reduced N_2 content) the bed dynamics are expected to be similar to air firing. The mass flow rate of oxygen from the ASU is modulated to provide about 3 percent by volume of oxygen in the flue gas stream leaving the combustor (the same as was used in the air fired Case-1).

Furnace Heat Transfer Rate:

The furnace flue gas composition with oxygen firing has much higher CO_2 and H_2O concentrations, as compared to air firing, which would tend to increase the non-luminous radiation component of the heat transfer rate from the gas to the walls. However, the heat transfer rate in the furnace is dominated by solids heat transfer phenomenon (conduction, convection and radiation).

Analysis of heat transfer data from the MTF testing showed that there was no discernible difference in the furnace wall heat transfer coefficient between air firing and O_2 firing. Therefore, for Case-2 calculations, furnace wall heat transfer coefficients were assumed to be identical to those used for air firing.

Low Level Heat Recovery System:

In O_2 fired Case-2, part of the low-pressure feedwater stream leaving the existing condensate pump bypasses the existing extraction feedwater heaters #1 and #2. The additional heat added to the feedwater is provided through the recovery of low level heat rejected by the Air Separation Unit (ASU) main air compressor aftercoolers. This results in an increase in steam turbine generator output of about 1.6 MWe and an increase in condenser heat rejection of about 44.8 x 10^6 kJ/hr (42.5 x 10^6 Btu/hr) or about 10 percent as compared to the Case-1 analysis.

Sulfur Capture:

In conventional, air fired CFBs, limestone is added to the combustor to capture much of the sulfur in the fuel. A backend sulfur capture system, such as ALSTOM's FDA, may be used for additional sulfur capture.

With oxygen firing, limestone can also be used in the combustor, but a high combustor temperature would be required to ensure calcination of the limestone (see Section 3.1.3).

Figure 4.12 shows the calcination temperature of calcium carbonate as a function of temperature and CO_2 partial pressure. For typical CO_2 content with oxygen firing, a temperature of about 885°C / 1625°F would be required. Recarbonation ($CaO + CO_2 \rightarrow CaCO_3$) can occur where the temperature drops lower:

- In the **backpass** the gas and fly ash cool; the fly ash may recarbonate.
- In the **External Heat Exchanger** the circulating solids cool to below the calcination temperature.

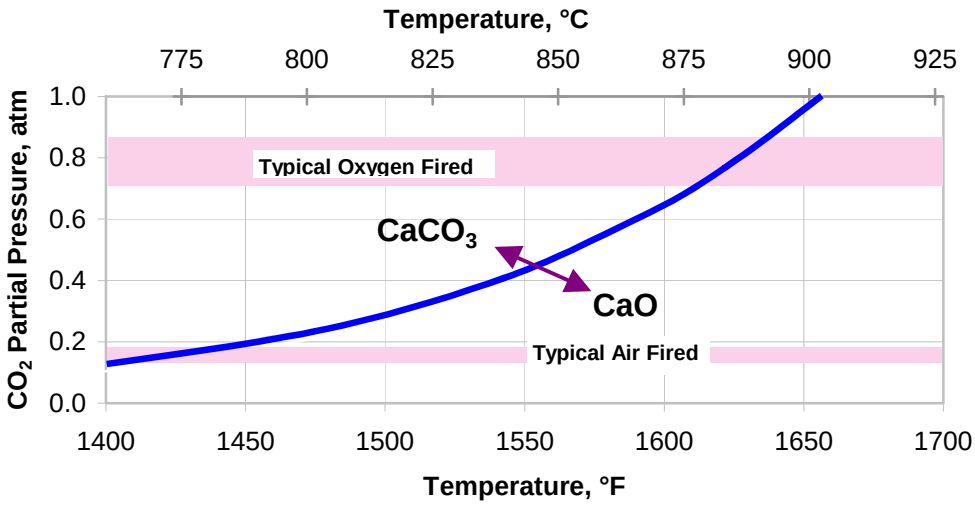

Figure 4.12: Calcination Temperature of Calcium Carbonate

If a FBHE is fluidized with recirculated flue gas, the large amount of unreacted CaO in the solids will "capture" most of the CO_2 in the fluidizing gas. This leaves the small amount of water vapor and oxygen, which will be unable to fluidize the heat exchanger (unless a very large excess of flue gas is used).

This was demonstrated in the 2004 pilot plant tests (Nsakala, Liljedahl, and Turek, 2004). The sealpot operated below the calcination point during those tests - the cyclone and dipleg were cooled. When the sealpot was fluidized with pure CO_2, it would not operate. It was necessary to fluidize with air for those tests. In a commercial unit, the sealpot would likely remain above the calcination temperature; the problem will be in the FBHE.

Some of the implications for sulfur capture are summarized in Table 4.10, for both retrofit and greenfield plants, each with or without limestone added to the furnace.

When retrofitting an air fired CFB to oxygen firing, the oxygen will be blended with recirculating flue gas to about 30% O_2 in the oxidant stream. This will approximately maintain the performance of the existing equipment as designed for air firing. A new greenfield unit can be designed for a richer oxidant - up to 70% O_2. This allows a smaller unit due to the reduced gas flow. With reduced gas flow, there is less heat removal in the furnace and convective pass. Thus a larger External Heat Exchanger is required to control the combustor temperature and provide heat to the steam cycle (see Nsakala, Liljedahl, and Turek, 2004).

With limestone added to the combustor, the temperature should be high to ensure good calcination. A high temperature may not be appropriate for low rank fuels, which are generally burned at lower combustor temperatures. Anthracite and petroleum coke will be best suited for high temperatures, especially with limestone in the combustor.

One way to avoid recarbonation is to fluidize the FBHE with air or with nitrogen from the air separation plant. To avoid contaminating the flue gas, the fluidizing gas must be vented separately, with heat recovery and particulate removal from the hot vented gas.

Table 4.10: Issues for Sulfur Capture in Oxygen Fired CFB

	Greenfield		Retrofit	
Oxygen Dilution with Recirculated Flue Gas	Up to 70% O_2 with a large External Heat Exchanger		About 30% O_2 to match air fired conditions	
Limestone to Furnace	Yes	No	Yes	No
Furnace Temperature for:				
Calcination (all fuels)	High temperature desirable (>1625°F / 885°C)	No Restriction	High temperature desirable	No Restriction
Low Rank Fuel	High temperature not a good match	Low temperature (< 1550°F / 840°C [1])	Redesign to high temperature not a good match	As designed (low temperature)
Bituminous Coal	Sulfur capture in the furnace may suffer at high furnace temperature	Medium temperature	Sulfur capture in the furnace may suffer with redesign to high temperature	As designed (medium temperature)
Anthracite and Petroleum Coke	High temperature a good match	High temperature (> 1600°F / 870°C [1])	As designed (high temperature) a good match	As designed (high temperature)
Sorbent in Backend FDA	CaO in fly ash from the furnace	Lime or hydrated lime added to FDA	CaO in fly ash from the furnace	Lime or hydrated lime added to FDA
FBHE Fluidizing Gas	Air, N_2, other - requires vent system	Recirculated Flue Gas OK	Air, N_2, other - requires vent system	Recirculated Flue Gas OK
MBHE	OK - will avoid recarbonation with limestone	OK - benefits even without added limestone	Not likely economical to replace existing FBHE	

[1] These temperature ranges are very approximate

Another approach is to feed no limestone in the combustor. Recirculated flue gas can then be used to fluidize the FBHE. The sulfur capture is done entirely in the backend FDA system fed with fresh lime (or hydrated lime). Most commercial installations of FDA to date are on pulverized coal units and incinerators with added lime or hydrated lime (no limestone added to the combustor).

One of the advantages of a MBHE is that it needs no fluidizing gas, so it could operate even with the CaO in the solids cooling to below the calcination temperature. Even without limestone in the furnace and the potential for recarbonation, an MBHE will have additional benefits (see Section 3.5.15).

Note there is one possible scenario for oxygen firing which would require no sulfur capture - the CO_2-rich flue gas is dried, then directly sequestered, including the SO_2 and other pollutants. This scenario is not considered in here; sulfur capture is necessary to meet a CO_2 product specification for enhanced oil recovery.

For the present study - a retrofit with medium volatile bituminous coal - the options considered are limestone to the furnace with air fluidizing a vented FBHE *vs.* lime only to the FDA. A rough operating cost comparison shows that using limestone has about 15% lower combined total annual sorbent cost and solid waste disposal costs. This lower operating cost is equivalent to a decrease in incremental COE of about 0.05 cents/kWh or about a 1.2 percent. This decrease would be offset by the additional investment costs for the vented FBHE with heat recovery and dust cleanup. The level of this additional invetment cost was not estimated, but was thought to be high enough that the lime-only option was selected for this O_2 fired retrofit application.

For petroleum coke and other fuels with less than about 15% ash, limestone added to the combustor also serves to maintain sufficient bed inventory. Without limestone, additional inert materials, such as sand or bottom ash from a pulverized coal boiler, would need to be continually added to the combustor.

Process Description, Process Flow Diagram and Equipment:

Figure 4.13 shows a simplified process flow diagram for the Boiler Island of the Case-2 oxygen-fired CFB retrofit concept. This process description briefly describes the function of the major equipment and systems included within the Boiler Island.

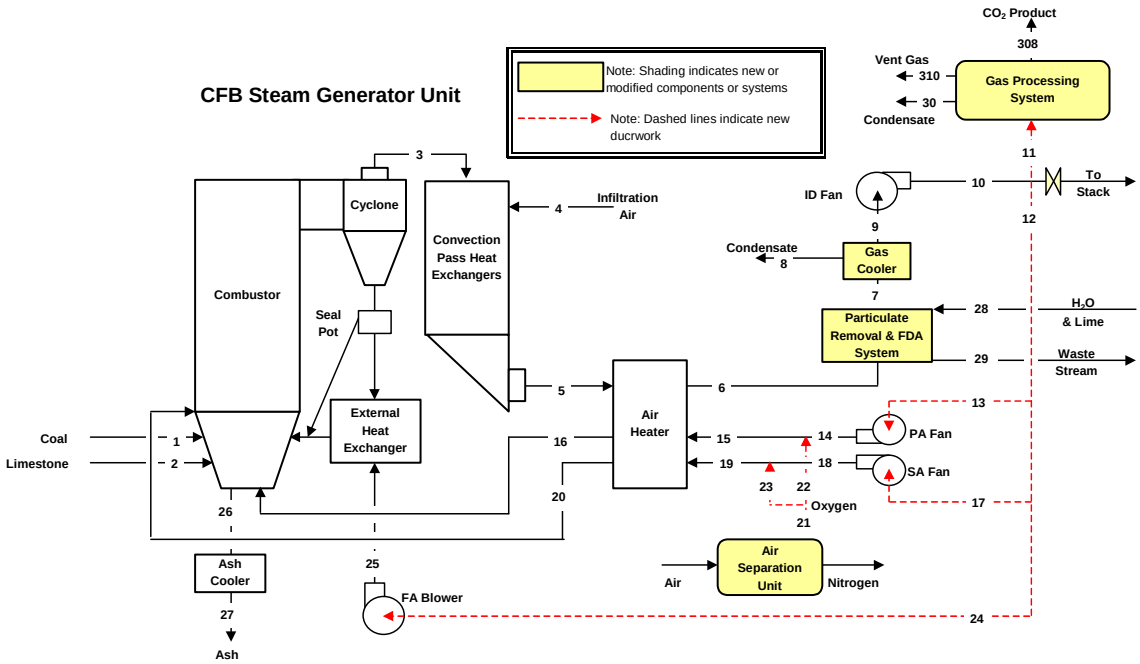

Figure 4.13: Case-2 Simplified Boiler Island Gas Side Process Flow Diagram

Complete data for all streams are shown in the material and energy balance shown in Table 4.11. In this concept coal or another high carbon content fuel (Stream 1) is reacted with a preheated mixture of substantially pure oxygen and recirculated flue gas (Streams 16 and 20) in the Combustor section of the Circulating Fluidized Bed (CFB) system. The oxygen supply (Streams 21, 22, and 23) is provided from a new cryogenic Air Separation Unit (ASU).

Flue gas (mainly CO_2 and H_2O) and ash enter the two existing cyclones (Stream 3). Most of the solids are removed in the cyclone. The hot solids are recirculated to the combustor through two parallel paths: (1) an uncooled stream, which flows directly back to the combustor, and (2) a stream flowing through the existing two Fluid Bed Heat Exchangers where the solids are cooled before returning to the combustor. The Fluid Bed Heat Exchangers provide evaporator, superheat, and reheat duty.

Draining hot solids through the existing water-cooled ash coolers (Streams 26 and 27) controls solids inventory in the system while effectively recovering heat from the hot ash. The cooling water used for the ash coolers is provided from the feedwater stream leaving the final extraction feedwater heater of the steam cycle.

The combustor temperature is 1580°F / 860°C. The temperature of Stream 3 is 1680°F / 916°C based on a 100°F increase due to afterburning in the cyclone. This is the same as in the Base Case.

The flue gas leaving the cyclones (Stream 3) is cooled in existing heat exchanger sections (Superheater, Reheater, and Economizer) located in the convection pass (back pass) of the system, also by exchanging heat with the power cycle working fluid. The flue gas leaving the convection pass heat exchanger sections (Stream 5) is further cooled in an

existing air heater. The oxygen stream leaving the new Air Separation Unit (Stream 21) is split and mixed with primary and secondary streams of recirculated flue gas (Streams 14 and 18) and the mixtures are preheated in the air heater. The quantity of recirculated flue gas used (Stream 12) is adjusted to provide proper fluidization for the bed and other equipment in the CFB system requiring a fluidizing medium.

The flue gas leaving the existing air heater (Stream 6) is cleaned of fine particulate matter and SO_2 in the modified Particulate Removal and Flash Dryer Absorber (FDA) system. Finally, a new Gas Cooler is used to cool the gas before the flue gas enters the Induced Draft (ID) Fan (Stream 9). The Gas Cooler is used to cool the flue gas to as low a temperature as is possible (using a direct contact water system) before recycling. This is done to minimize the power requirements for the draft system (induced draft fan, fluidizing air blowers, primary air and secondary air fans) and the product gas compression system, which is part of the Gas Processing System. Some H_2O vapor is condensed out of the flue gas in the Gas Cooler. The flue gas leaving the ID Fan (Stream 10), comprised of mostly CO_2, is split with about 20 percent of the flue gas going to the product stream (Stream 11) for further processing for an EOR application. The remainder of the flue gas (about 80 percent) is recirculated to the CFB system (Stream 12).

Material and Energy Balance:

Table 4.11 shows the Boiler Island material and energy balance for Case-2. The stream numbers shown at the top of each column of the table refer to stream numbers shown in Figure 4.13. The performance shown was calculated with O_2 firing at MCR conditions for this unit and at ambient conditions as defined in the design basis.

The MCR condition is defined as high-pressure turbine inlet conditions of 284,401 kg/hr (627,000 lbm/hr), 138 bara (2,000 psia), 538 °C (1,000 °F) and intermediate-pressure turbine inlet conditions of 257,375 kg/hr (567,418 lbm/hr), 29.5 bara (428 psia), 538 °C (1,000 °F). These steam conditions were also used for the Base Case (Case-1). The boiler was fired with enough oxygen to leave about 3 percent by volume of oxygen in the flue gas stream leaving the furnace (Stream 3), the same as was used for Case-1. This oxygen requirement results in a stoichiometry of about 1.04 for Case-2.

Table 4.11: Case-2: Boiler Island Gas Side Material and Energy Balance

SI Units

Constituent	(Units)	1	2	3	4	5	6	7	8	9	10	11	12	13	14	15	16	17	18	19	20	21	22	23	24	25	26	27	28	29	30	310	300
O2	(Kg/hr)	759		10897	671	11567	11567	11567	0	11567	11567	2336	9231	5781	5781	54377	54377	2116	2116	19903	19903	66383	48695	17787	1334	1334						2331	5
N2	"	428		14219	2221	16440	16440	16440	0	16440	16440	3320	13120	8217	8217	8708	8708	3008	3008	3187	3187	671	491	180	1896	1896						3319	1
H2O	"	1452		20799	37	20837	20837	36803	23981	12823	12823	2589	10233	6409	6409	6409	6409	2346	2346	2346	2346				1479	1479			16187	221	2527	62		
CO2	"			384848		384848	384848	384848	0	384848	384848	77718	307130	192348	192348	192348	192348	70405	70405	70405	70405				44377	44377					33	4415	73270
SO2	"			2436		2436	2436	865	0	865	865	175	690	432	432	432	432	158	158	158	158				100	100							175
H2	"	1020																															
Carbon	"	21642		87		87	87																				346			87			
Sulfur	"	874																															
CaO	"																											2063	2063	688			
CaSO3	"																											0	0	2947			
CaSO4	"																																
CaCO3	"																																
Ash	"	8636		1727		1727	1727																				6909	6909		1727			
		Coal	Limestone	Flue Gas	Infiltration Air	Flue Gas	Flue Gas	Flue Gas	Condensate	Flue Gas	Flue Gas	Flue Gas	Recirc Gas	PA Fan in	PA Fan out	Oxy + PA	Hot Oxy + PA	SA Fan in	SA Fan out	Oxy + SA	Hot Oxy + SA	Total Oxygen	Primary O2	Sec O2	Grease Gas	Grease Gas	Hot Ash Drain	Cool Ash Drain	Hydrated Lime	Waste Stream	Condensate	Vent Gas	CO2 Prod
Total Gas	(Kg/hr)	0.00	0	433199	2929	436128	436128	450523	0	426543	426543	86138	340405	213187	213187	262274	262274	78033	78033	96000	96000	67053	49086	17967	49185	49185						10128	73451
Total Solids	"	34810	0	1814	0	1814	1814	0	0	0	0	0	0	0	0	0	0										7255	7255	2063	5448			
Total Flow	"	34810	0	435013	2929	437942	437942	450523	23981	426543	426543	86138	340405	213187	213187	262274	262274	78033	78033	96000	96000	67053	49086	17967	49185	49185	7255	7255	18250	5669	2560	10128	73451
Temperature	(Deg C)	26.7	26.7	915.6	26.7	292.8	165.9	70.7	37.8	37.8	42.8	42.8	42.8	42.8	58.4	50.8	220.0	42.8	55.4	48.3	220.0	18.2	18.2	18.2	42.8	88.4	860.0	265.5	26.7	70.7	52.8	18.9	14.4
Pressure	(Bara)	1.014	1.014	1.014	1.014	1.004	0.994	0.963	1.014	0.958	1.014	1.014	1.014	1.014	1.201	1.201	1.188	1.014	1.163	1.163	1.150	1.201	1.201	1.201	1.014	1.634	1.014	1.014	1.014	1.014	1.014	23.793	138.966
$h_{sensible-gas}$	(kJ/kg)			933.456		241.933	120.308	37.682	0.000	8.821	12.861	12.861	12.861	12.861	25.490	19.404	167.502	12.861	23.075	17.441	167.502	-7.023	-7.023	-7.023	12.861	50.45							
$h_{sensible-solids}$				907.597		219.213	106.649										0.000										838.23	194.03	0.00	41.44	0.00	0.00	0.00
Energy									41.708																								
Chemical	(10^6 kJ/hr)	807.619		2.549		2.549	2.549										0.000										10.197	10.197	0.000	2.549	0.000	0.000	0.000
Sensible	(10^6 kJ/hr)	0.000	0.000	406.018	0.000	105.911	52.663	16.977	1.000	3.763	5.486	1.108	4.378	2.742	5.434	5.089	43.931	1.004	1.801	1.674	16.080	-0.471	-0.345	-0.126	0.633	2.481	6.082	1.408	0.000	0.235	0.251	-0.065	-1.688
Latent	(10^6 kJ/hr)	0.000	0.000	45.635	0.082	45.717	45.717	80.749	0.000	28.133	28.133	5.681	22.452	14.061	14.061	14.061	14.061	5.147	5.147	5.147	5.147	0.000	0.000	0.000	3.244	3.244	0.000	0.000	0.000	0.484	0.000	0.137	0.000
Total Energy(1)	(10^6 kJ/hr)	807.619	0.000	454.203	0.082	154.178	100.930	97.725	1.000	31.896	33.619	6.789	26.830	16.803	19.495	19.150	57.993	6.150	6.947	6.821	21.227	-0.471	-0.345	-0.126	3.877	5.725	16.279	11.605	0.000	3.269	0.251	0.072	-1.688

Notes:
(1) Energy Basis; Chemical based on Higher Heating Value (HHV); Sensible energy above 26.7C; Latent based on 2194 kJ/kg of water vapor

English Units

Constituent	(Units)	1	2	3	4	5	6	7	8	9	10	11	12	13	14	15	16	17	18	19	20	21	22	23	24	25	26	27	28	29	30	310	300
O2	(Lbm/hr)	1673		24023	1478	25501	25501	25501		25501	25501	5150	20352	12746	12746	119881	119881	4665	4665	43880	43880	146350	107135	39215	2941	2941						5139	11
N2	"	944		31348	4897	36245	36245	36245		36245	36245	7319	28925	18115	18115	19198	19198	6631	6631	7027	7027	1478	1082	396	4179	4179						7318	2
H2O	"	3200		45855	83	45938	45938	81138	52869	28269	28269	5709	22560	14129	14129	14129	14129	5172	5172	5172	5172	0	0	0	3260	3260			35687	487	5571	138	
CO2	"			848449		848449	848449	848449		848449	848449	171340	677109	424057	424057	424057	424057	155217	155217	155217	155217	0	0	0	97835	97835					72	9734	161534
SO2	"			5370		5370	5370	1906		1906	1906	385	1521	953	953	953	953	349	349	349	349	0	0	0	220	220							385
H2	"	2249																															
Carbon	"	47712		191		191	191																				763			191			
Sulfur	"	1926																															
CaO	"																											4549	4549	1516			
CaSO3	"																													6497			
CaSO4	"																																
CaCO3	"		0																														
Ash	"	19040	0	3808		3808	3808																				15232	15232		3808			
		Coal	Limestone	Flue Gas	Infiltration Air	Flue Gas	Flue Gas	Flue Gas	Condensate	Flue Gas	Flue Gas	Flue Gas	Recirc Gas	PA Fan in	PA Fan out	Oxy + PA	Hot Oxy + PA	SA Fan in	SA Fan out	Oxy + SA	Hot Oxy + SA	Total Oxygen	Primary O2	Sec O2	Grease Gas	Grease Gas	Hot Ash Drain	Cool Ash Drain	Hydrated Lime	Waste Stream	Condensate	Vent Gas	CO2 Prod
Total Gas	(Lbm/hr)			955045	6458	961503	961503	993239		940371	940371	189903	750468	470000	470000	578217	578217	172034	172034	211644	211644	147828	108217	39611	108434	108434						22328	161932
Total Solids	"	76744		3999		3999	3999																				15996	15996	4549	12012			
Total Flow	"	76744	0	959044	6458	965502	965502	993239	52869	940371	940371	189903	750468	470000	470000	578217	578217	172034	172034	211644	211644	147828	108217	39611	108434	108434	15996	15996	40235	12498	5643	22328	161932
Temperature	(Deg F)	80	80	1680	80	559	331	159	100	100	109	109	109	109	137	123	428	109	132	119	428	65	65	65	109	191	1580	510	80	159	127	66	58
Pressure	(Psia)	14.7	14.7	14.7	14.7	14.6	14.4	14.0	14.7	13.9	14.7	14.7	14.7	14.7	17.4	17.4	17.2	14.7	16.9	16.9	16.7	17.4	17.4	17.4	14.7	23.7	14.7	14.7	14.7	14.7	14.7	345.0	2015.0
$h_{sensible-gas}$	(Btu/lbm)			446.719		115.780	57.575	18.034	0.000	4.221	6.155	6.155	6.155	6.155	12.199	9.286	80.161	6.155	11.043	8.347	80.161	-3.361	-3.361	-3.361	6.155	24.14							
$h_{sensible-solids}$				434.344		104.908	51.039																				401.15	92.86		19.83	0.00	0.00	0.00
Energy									19.960																								
Chemical	(10^6 Btu/hr)	852.087		2.690		2.690	2.690																				10.758	10.758		2.690	0.000	0.000	0.000
Sensible	(10^6 Btu/hr)	0.000	0.000	428.374	0.000	111.743	55.563	17.912	1.055	3.970	5.788	1.169	4.619	2.893	5.733	5.369	46.350	1.059	1.900	1.767	16.966	-0.497	-0.364	-0.133	0.667	2.618	6.417	1.485	0.000	0.248	0.265	-0.069	-1.781
Latent	(10^6 Btu/hr)	0.000	0.000	48.148	0.087	48.235	48.235	85.195	0.000	29.683	29.683	5.994	23.688	14.835	14.835	14.835	14.835	5.430	5.430	5.430	5.430	0.000	0.000	0.000	3.423	3.423	0.000	0.000	0.000	0.511	0.000	0.145	0.000
Total Energy(1)	(10^6 Btu/hr)	852.087	0.000	479.211	0.087	162.667	106.487	103.106	1.055	33.652	35.470	7.163	28.307	17.728	20.569	20.205	61.186	6.489	7.330	7.197	22.396	-0.497	-0.364	-0.133	4.090	6.040	17.175	12.244	0.000	3.448	0.265	0.075	-1.781

Notes:
(1) Energy Basis; Chemical based on Higher Heating Value (HHV); Sensible energy above 80F; Latent based on 1050 Btu/Lbm of water vapor

Case-2: Boiler Performance Summary:

The main steam flow for this case is 284,401 kg/hr (627,000 lbm/hr). The cold reheat flow leaving the high-pressure turbine for this case is 257,375 kg/hr (567,418 lbm/hr). The hot reheat flow that is returned to the intermediate pressure turbine for this case is also 257,375 kg/hr (567,418 lbm/hr). The inlet and outlet steam/water conditions supplied to and produced by the modified O_2 fired CFB steam generator unit is shown in Table 4.12 below. These steam/water conditions are identical to those in the air fired Case-1.

Table 4.12: Case-2 (Base Case) Boiler/Turbine Steam Flows and Conditions

	SHO	FWI	RHO	RHI
(lbm/hr)	627000	627000	567418	567418
(kg/hr)	284401	284401	257375	257375
(psia)	2095	2500	451	481.7
(bara)	144.5	172.4	31.1	33.2
(deg F)	1005	460	1001	635
(deg C)	540	238	539	335
(Btu/lbm)	1474	443	1522	1322
(kJ/kg)	3080.3	924.6	3181.4	2761.8

Notes: SHO = Superheater Outlet
FWI = Feedwater Inlet
RHO = Reheater Outlet
RHI = Reheater Inlet

To produce these steam outlet conditions, the superheat circuit requires about 1.2 percent de-superheating spray and the reheat circuit requires no spray. Biasing the flow of hot solids leaving the cyclones through or around the Reheat external heat exchanger controls the outlet steam temperature of the reheater to the required level. The Reheat de-superheating sprays are used only during transients if required. Solids flow is biased through or around the Superheat external heat exchanger to control the bed temperature. The Superheat de-superheating sprays are used to control superheater outlet temperature to the desired value.

The boiler was fired with enough oxygen such that there remains about 3 percent by volume O_2 in the flue gas exiting the combustor (the same as in Case-1 with air firing). The resulting boiler efficiency calculated for this case was about 88.8 percent (HHV basis). The air heater exit gas temperature was166 °C (331 °F) for this case.

Boiler Heat Transfer Comparison:

Figure 4.14 shows a general comparison of the boiler heat absorption distribution between the air firing of Case-1 and the oxygen firing of Case-2. The total heat absorption is exactly the same in both air fired Case-1 and oxygen fired Case-2.

The combustor temperature is the same for both cases and the heat transfer coefficient in the Combustor was assumed to be the same, based upon the review and analysis of pilot plant test data (see Section 3). Thus the Combustor heat absorption is the same in both cases. Differences in heat absorption occur in the Convection Pass, the External Heat

Exchanger and ash cooler. The Convection Pass heat absorption for O_2 fired Case-2 is about 24 percent higher than it was for air fired Case-1 due to the higher mass flow (~20 percent higher) and higher specific heat of the flue gas in the convective pass with O_2 firing. To compensate for the increased convective pass absorption, the External Heat Exchanger (EHE) heat absorption for O_2 fired Case-2 is reduced to about 79 percent of the Case-1 air fired value. This is accomplished by diverting a larger portion of the hot solids leaving the cyclones directly to the combustor thus reducing the hot solids flow through the EHE's. The heat transfer coefficient for the FBHE's was assumed to be the same for air and O_2 firing based upon the review and analysis of test data from Section 3. The lower ash flow being removed from the combustor of Case-2 accounts for the difference in ash cooler heat absorption. The ash flow is lower in Case-2 since limestone is not added to the combustor in this case.

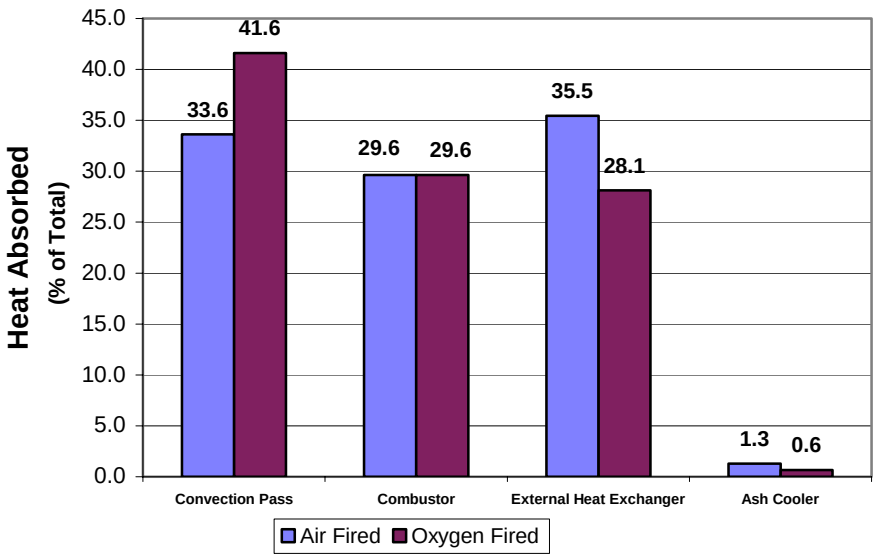

Figure 4.14: CFB Boiler Heat Absorption Comparison (Air and O_2 Firing)

Convection Pass Heat Transfer Comparison:

Figure 4.15, Figure 4.16, and Figure 4.17 show the comparison of convective, non-luminous, and total heat transfer rates respectively between air firing and oxygen firing for all the major sections contained within the existing convective pass of the unit at full load (MCR) operating conditions.

Convective heat transfer in utility steam generator units is dependent upon many of the transport properties of the flue gas (viscosity, thermal conductivity, density, specific heat and others). Additionally, convection depends on Reynolds number where gas velocity is important. With the O_2 fired system there are significant changes in the flue gas analysis as compared to the flue gas with air firing. These gas analysis changes cause both transport property changes and gas velocity changes throughout the unit. The resulting convective heat transfer rate enhancements with O_2 firing as compared to air firing ranged from about 16 to 17 percent, as shown in Figure 4.15.

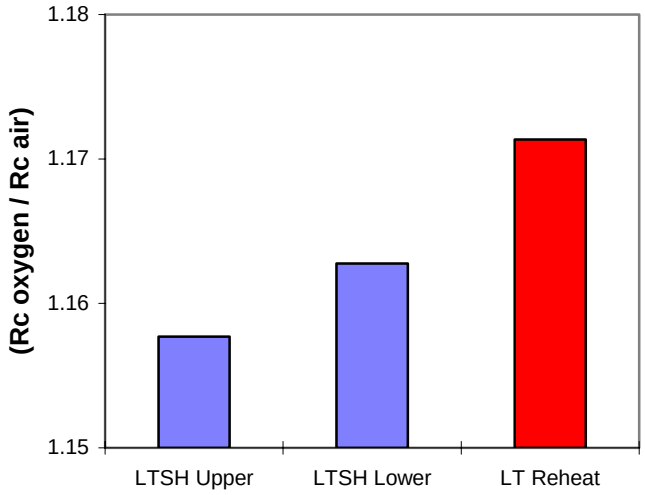

Figure 4.15: Convective Heat Transfer Rate Comparison

Significant differences in non-luminous radiant heat transfer are also expected when comparing air firing and O_2 firing. Of the gases produced by the complete combustion of a fuel, only carbon dioxide, water vapor and sulfur dioxide emit radiation over a sufficiently wide band of wavelengths to warrant consideration. With this O_2 fired system the primary change in the flue gas as compared to air firing is the large increase in the CO_2 and H_2O content and the decrease in N_2 content. The resulting enhancement in non-luminous heat transfer rates with O_2 firing as compared to air firing ranged from about 42 to 45 percent, as shown in Figure 4.16.

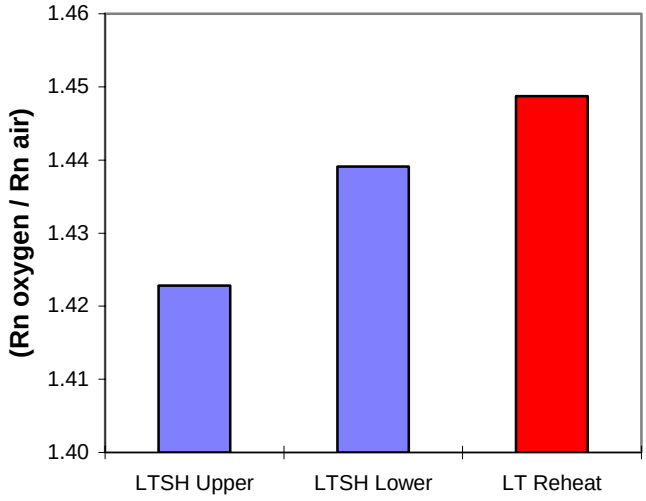

Figure 4.16: Non-Luminous Radiant Heat Transfer Rate Comparison

The total heat transfer rate enhancements with O_2 firing as compared to air firing ranged from 14 to 23 percent, as shown in Figure 4.17.

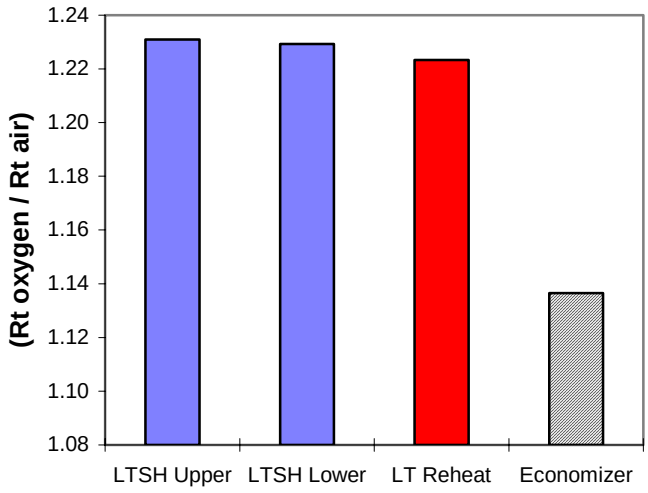

Figure 4.17: Total Heat Transfer Rate Comparison

Boiler Pressure Part Materials Evaluation:

With the increased heat transfer rates associated with oxygen firing and with similar steam temperature profiles (as compared to air firing), there was concern regarding the potential for high metal temperatures especially within rear pass heat exchangers of the study unit. The Metal Temperature Program (MTP) was utilized to investigate this issue. The MTP, using thermal inputs from the RHBP, calculates steam and metal temperatures along the length of a tube. This program was used in a preliminary analysis to insure no design limits were exceeded for the existing heat exchanger tubing.

A Circulating Fluid Bed (CFB) Boiler operates with only moderately less total air flow at low loads than at Maximum Continuous Rating (MCR). This is done in order to maintain proper fluidization and circulation of the bed. The combustor outlet temperature does not drop off proportionally with load because the lower airflow reduces the heat transfer rate in the combustor. As a consequence, the gas temperature entering the backpass during low loads is only moderately lower than at MCR. As a result of the relatively higher gas weight with only moderately less gas temperature, the pressure parts material selection in the backpass of a CFB is overwhelmingly governed by low load conditions and not the MCR operating condition. In other words, the backpass pressure part materials on CFBs are typically of better quality than they need to be at high loads.

With oxygen firing, for the present retrofit scenario, the gas weight is approximately 20 percent higher, and the backpass heat absorption is greater than for air firing at the same load. Metal Temperature Program analysis of the backpass pressure part materials using the calculated gas and steam conditions between 75 percent to MCR loads with oxygen firing indicate that the pressure parts temperatures operate within ASME allowable limits.

At lower loads, below about 75 percent, the unit would have to be switched back over to air firing. If it is essential to operate the unit at low loads on oxygen firing, then the pressure part materials will have to be upgraded. For the scope of the work in this study, it was assumed that the unit would either operate at high loads, or be permitted to operate

on air firing at low loads.

The implication for oxygen firing is that for high load conditions, from approximately 75 percent to MCR, the existing pressure part materials will be sufficient. More detailed analyses would have to be made of low load operation on oxygen firing to determine exactly the lowest possible load the unit could be safely operated at, before the unit would have to be switched over to air firing.

One possible method to alleviate this limitation or at least extend the O_2 firing load range is to force the combustor outlet temperature to be reduced at low loads. Since we are capturing sulfur in the baghouse with a lime based FDA system there would be no adverse effects on sulfur capture if this method were used. The reduced combustor outlet temperature could be obtained by biasing more of the solids leaving the cyclones through the FBHE's at loads below 75 percent. This method could be investigated in a more detailed analysis.

For the Fluid Bed Heat Exchanger (FBHE) surfaces, the materials are essentially unaffected by the gas weight increase of the backpass. There is some increase in the inlet steam temperatures with O_2 firing, but since the temperature increase is at the cool end of the tubing for the FBHE's, where the materials selections are governed by the outlet steam temperatures, the materials are more than adequate. Therefore, no changes in pressure parts materials are necessary for the FBHE's.

4.4.4 Case-2: Gas Processing System (GPS): Process Description, Performance, and Equipment

The purpose of the Gas Processing System (GPS) for this project is to process the flue gas stream leaving the oxygen-fired Boiler Island to provide a liquid CO_2 product stream of suitable conditions for an EOR application.

The Case-2 CO_2 capture system is designed for more than 94 percent CO_2 capture from the GPS feed stream. Process design, equipment selection, performance calculations and cost estimates were developed for all the systems and equipment required for cooling, purifying, compressing and liquefying of the CO_2 rich flue gas stream to a product quality acceptable for pipeline transport. The Dakota Gasification Company's CO_2 specification for EOR (Dakota Gasification Company, 2005) given in Table 4.13 was used as the basis for the CO_2 capture system design. The calculated volume percent values for the product stream using the gas processing system described in this section are shown for comparison in the far right column of Table 4.13. As shown, the CO_2 product meets or exceeds all of the specification values.

Table 4.13: Dakota Gasification Project's CO_2 Specification for EOR and the Calculated Product Stream Purity

Component	(units)	Spec Value	Actual Value
CO_2	(vol %)	96	99.8
H_2S	(vol %)	1	---
CH_4	(vol %)	0.3	---
C_2 + HC's	(vol %)	2	---
CO	(vol %)	---	---
N_2	(ppm by vol.)	6000	19.0
H_2O	(ppm by vol.)	2	0.5
O_2	(ppm by vol.)	100	95.0
Mercaptans and other Sulfides	(vol %)	0.03	---

GPS Process Description:

The following subsections provide the process description for a CO_2 recovery system that first cools and then compresses a CO_2 rich flue gas stream from an oxygen-fired CFB boiler to a pressure high enough so CO_2 can be liquefied. The resulting liquid CO_2 is passed through a CO_2 distillation column to reduce the N_2 and O_2 content to meet the stringent specification noted above. Then the liquid CO_2 is pumped to a high pressure so it can be economically transported for usage or sequestration. The overhead gas from the CO_2 distillation column condenser outlet is ultimately vented to atmosphere.

In this study it was assumed that the CO_2 product was to be used for an enhanced oil recovery (EOR) application. Pressure in the transport pipeline must be maintained above the critical pressure of CO_2 to avoid 2-phase flow. The transport line and CO_2 injection well however are not included as part of the scope in this project.

A later subsection (Process Flow Diagrams) provides four process flow diagrams (PFD's) for the GPS. These PFD's are referred to throughout this process description.

Figure 4.18 shows the Flue Gas Quenching process flow diagram.

Figure 4.19,

Figure 4.20, and Figure 4.21 show the Flue Gas Compression, Distillation and Propane Refrigeration process flow diagrams, which make up the complete Gas Processing System.

The key process parameters (pressures, temperatures, duties etc.) are shown in the material and energy balance tables provided in a later subsection (Material and Energy Balance) and will not be repeated in this description except in selected instances. The following subsections describe the various processes used within the Case-2 Gas Processing System.

Flue Gas Quenching:

Please refer to

Figure 4.18 (Drawing Number: PFD - 100).

The feed to the Gas Processing System is the flue gas stream that leaves the particulate and sulfur removal system of the Boiler Island. At this point, the flue gas is above the dew point of H_2O. All of the flue gas leaving the boiler is cooled to 37.8°C (100 °F) in Gas Cooler DA-101 that operates slightly below atmospheric pressure. A significant amount of water condenses out in this cooler. Excess condensate is blown down to the cooling water system. A single vessel has been provided for this cooler.

The Gas Cooler is configured in a packed tower arrangement where the flue gas is contacted with cold water in countercurrent fashion. Warm water from the bottom of the contactor is recycled back to the top of the contactor by Water Pump GA-101 after first being cooled in an external water cooled heat exchanger, Water Cooler EB-101 (plate and frame exchanger). The cooling water for this exchanger comes from the existing cooling tower.

Because the flue gas may carry a small amount of fly ash, the circulating water is filtered in Water Filter FD-101A-C to prevent solids build-up in the circulating water. Condensate blowdown is filtered and is taken out downstream of the filter. However, the stream is not cooled and is split off before EB-101. Make-up water is added before EB-101.

From the Gas Cooler the gas stream is boosted in pressure by the ID fan (part of the boiler scope). The gas stream is then split into two streams. One stream is recirculated to the boiler and the other stream is the product feed stream. This design was developed to minimize the length of ducting operating at a slight vacuum and to minimize the temperature of the gas being recycled back to the boiler thus minimizing the power requirement of the existing boiler fans and blowers. The mass flow rate of the gas recirculation stream is about 4.2 times the mass flow rate of the product gas stream, which proceeds to the gas compression area. The recycle stream is sized to provide oxygen content of about 24 percent by volume in the oxidant streams supplying the existing boiler. The Gas Cooler also reduces the volumetric flow rate to, and the resulting power consumption of, the flue gas compression equipment located downstream.

Gas Compression System:
Please refer to

Figure 4.19 (Drawing Number: PFD - 200).

The flue gas compression section is where the CO_2 rich flue gas stream leaving the Boiler Island is compressed to about 30.0 barg (435 psig) by a four-stage centrifugal compressor, Flue Gas Compressor GB-101. The volumetric flow to the compressor inlet is about 910 actual cubic meters per minute (32,000 ACFM) and only a single frame is required. The discharge pressures of the four stages have been balanced to give reasonable power distribution and discharge temperatures across the various stages. The discharge pressures following each stage are listed below:

- 1st Stage 1.6 barg (23 psig)
- 2nd Stage 4.3 barg (63 psig)
- 3rd Stage 11.7 barg (170 psig)

- 4th stage 30.0 barg (435 psig)

Power consumption for this large compressor has been estimated using adiabatic efficiencies of about 82 percent for each stage as provided by the vendor.

Each flue gas compression stage has an aftercooler that utilizes cooling water for cooling the flue gas. In these aftercoolers the flue gas leaving each compressor stage is cooled to within 11.1°C (20°F) of the entering cooling water temperature which is 29.4 °C (85 °F).

Recovery of the aftercooler heat rejection with low temperature feedwater was considered. In theory this heat can be recovered in the condensate stream of the existing steam cycle and the overall power cycle can be made more efficient. However, this type of heat recovery system was not used in this case for several reasons. First, the temperature levels obtainable by the feedwater leaving the aftercoolers (65-104 C; 150-220 F) are relatively low. Second, minimal additional steam turbine power was calculated, and third, significant incremental costs are required for the larger heat exchangers and piping system, which would be required for the heat recovery system. Therefore, this type of low level heat recovery system was determined not to be economically justified in this situation.

As mentioned, the hot flue gas leaving each of the first three compressor stages is cooled with cooling water to 40.6°C (105 °F) (Flue Gas Compressor 1st/ 2nd / 3rd Stage Aftercooler EA-101/2/3). The flue gas compressor 4th stage aftercooler (EA-104) cools the flue gas to 65.0°C (149 °F) against cooling water. The flue gas then performs the reboiling duty for the CO_2 distillation column where the flue gas is further cooled to 26.7°C (80 °F). This cooler gas allows additional water to be knocked out which decreases the size and fuel gas consumption of the product gas driers. Due to their large size, many of these heat exchangers consist of multiple shells. Because of highly corrosive conditions, the process side of the coolers must be stainless steel.

Experience has shown that above ambient heat exchangers with duties under 0.95×10^6 kJ/hr (1×10^6 Btu/hr) have relatively poor cost to benefit ratios. Thus a trim cooler to further cool the flue gas leaving each aftercooler was not added for this relatively small plant size.

Because the flue gas stream leaving the direct contact flue gas cooler (DA-101) is saturated, some water condenses out in the three aftercoolers. The sour condensate is separated in knockout drums (FA-100/1/2/3/4) equipped with mist eliminator pads. Condensate from these drums is drained to the cooling tower or to waste water treatment. To prevent corrosion, these drums have stainless steel liners.

Flue gas leaving the 4th stage discharge knockout drum (FA-104) is fed to Flue Gas Drier FF-101 A/B where nearly all the remaining moisture is removed.

Gas Drying:
Please refer to

Figure 4.19 (Drawing Number: PFD - 200).

It is necessary to dry the CO_2 stream to meet the product specification. A fixed bed alumina drier has been selected to provide this service.

The performance of a fixed-bed drier improves as pressure increases. This favors locating the drier at the discharge of the compressor. However, as the operating pressure of the drier increases, so does the design pressure of the equipment. This favors low-pressure operation. But, at low pressure the diameter or number of the drier vessels grows, increasing the cost of the vessel. Having to process the recycle gas from the distillation column condenser cooling would also increase the diameter of the vessel. However, this is less than 13 percent of the forward flow. For this design the drier has been optimally located downstream of the 4th stage compressor. The CO_2 Drier system consists of two vessels (FF-101 A/B). One vessel is on line while the other is being regenerated. Flow direction is down during operation and up during regeneration.

The drier is regenerated with the non-condensable vent gas from the distillation column after it exits heat exchanger EA-108 in a simple once through scheme. During regeneration, the non-condensable vent gas is heated in Regeneration Heater FH-101 before passing it through the exhausted drier. After regeneration, heating is stopped while the vent gas flow continues through the drier bed. This cools the bed down to the normal operating range. The regeneration gas and the impurities contained in it are vented to the atmosphere.

Regeneration of an alumina bed requires relatively high temperature and, because HP steam pressure may fluctuate, a gas-fired heater has been specified for this service.

A Flue Gas Filter (FD-102) has been provided at the drier outlet to remove any fines that the gas stream may pick up from the desiccant bed.

CO_2 Condensation and Stripping:
Please refer to

Figure 4.20, and Figure 4.21 (Drawing Numbers: PFD - 300, PFD - 400).

From the CO_2 Drier, the gas stream is cooled to –24.4°C (-12 °F) using propane refrigeration in a CO_2 Feed Condenser (EA-105 A/B). From EA-105 the partially condensed flue gas stream continues on to CO_2 Column DA-102. At the pressure and temperature leaving the CO_2 Feed Condenser (EA-105), 28.8 bara (418 psia) and –24.4°C (-12 °F), about 90-mole percent of the stream is condensed. The flash vapors contain approximately 63-weight percent of the inlet oxygen and nitrogen, but also about 7.2-weight percent of the CO_2. Therefore, a distillation column with both a reboiler and condenser has been provided to reduce the loss of CO_2 to an acceptable level (about 5.7-weight percent) while simultaneously boiling out the inerts from the CO_2 liquid in the bottom of the column. A simple rectifier column with only a condenser could not remove enough of the inerts to meet the stringent CO_2 product specification. Upon leaving the distillation column sump the pressure of the liquid is boosted to 138 barg (2,000 psig) by CO_2 Pipeline Pump GA-103. This stream is now available for usage or sequestration. In this study it was assumed that the CO_2 product was used for an enhanced oil recovery (EOR) application.

The vapors in the feed to the distillation column contain the nitrogen and the oxygen that flashed from the feed as well as additional vapors generated in the reboiler. To keep the CO_2 loss to the minimum, the distillation column also has an overhead condenser (CO_2 Column Condenser EA-107). This is a floodback type condenser installed on top of the

distillation column. It cools the overhead vapor from the tower down to –45 °C (– 50 °F). The condensed CO_2 acts as cold reflux in the CO_2 Column.

Taking a slipstream from the inert-free liquid CO_2 leaving the CO_2 column bottoms and letting it down to the Flue Gas Compressor 3rd stage suction pressure cools EA-107. At this pressure, CO_2 liquid boils at –50 °C (– 58 °F) thus providing the refrigeration necessary to condense some of the CO_2 from the distillation column overhead gas. The process has been designed to achieve more than 94 percent CO_2 recovery. The vaporized CO_2 from the cold side of EA-107 is fed to EA-109 and then to the suction of the Flue Gas Compressor 3rd stage.

Any system containing liquefied gas such as CO_2 is potentially subject to very low temperatures if the system is depressurized to atmospheric pressure while the system contains cryogenic liquid. If the CO_2 Column (and all other associated equipment that may contain liquid CO_2) were to be designed for such a contingency, it would have to be made of stainless steel. However, through proper operating procedures and instrumentation such a scenario can be avoided and low temperature carbon steel (LTCS) can be used instead. Our choice here is LTCS. However, the condenser section will be made from stainless steel.

CO_2 Pumping and CO_2 Pipeline:
Please refer to

Figure 4.20 (Drawing Number: PFD - 300).

The CO_2 product must be increased in pressure to 138 barg (2,000 psig). A multistage heavy-duty pump (GA-103) is required for this service. This is a highly reliable derivative of an API-class boiler feedwater pump.

It is important that the pipeline pressure be always maintained above the critical pressure of CO_2 such that single-phase (dense-phase) flow is guaranteed. Therefore, the pressure in the line should be controlled with a pressure controller and the associated control valve located at the destination end of the line.

The CO_2 transport line and CO_2 injection well however are not included as part of the scope of supply in this project.

Offgas:

Please refer to

Figure 4.20 (Drawing Number: PFD - 300).

The vent gas from the CO_2 Column overhead is at high pressure and there is an opportunity for power recovery using turbo-expanders. Because the gas cools down in the expansion process, there is also an opportunity for cold recovery. Power recovery from the stream after let down via an expander was examined and it was determined that the amount of power that could be recovered without freezing the carbon dioxide in the stream was small. Thus power recovery could not be economically justified. The offgas leaves the distillation column at –45.6 °C (– 50 °F) approximately. The refrigeration recovery to condense CO_2 was the best use for this cold stream since it also produces a reasonable temperature regeneration gas for the dryers.

Process Flow Diagrams:

Four process flow diagrams for the Gas Processing System (GPS) described above are listed and shown below:

- (Drawing Number: PFD - 100) Flue Gas Quenching
- (Drawing Number: PFD - 200) Flue Gas Compression
- (Drawing Number: PFD - 300) Distillation
- (Drawing Number: PFD - 400) Propane Refrigeration

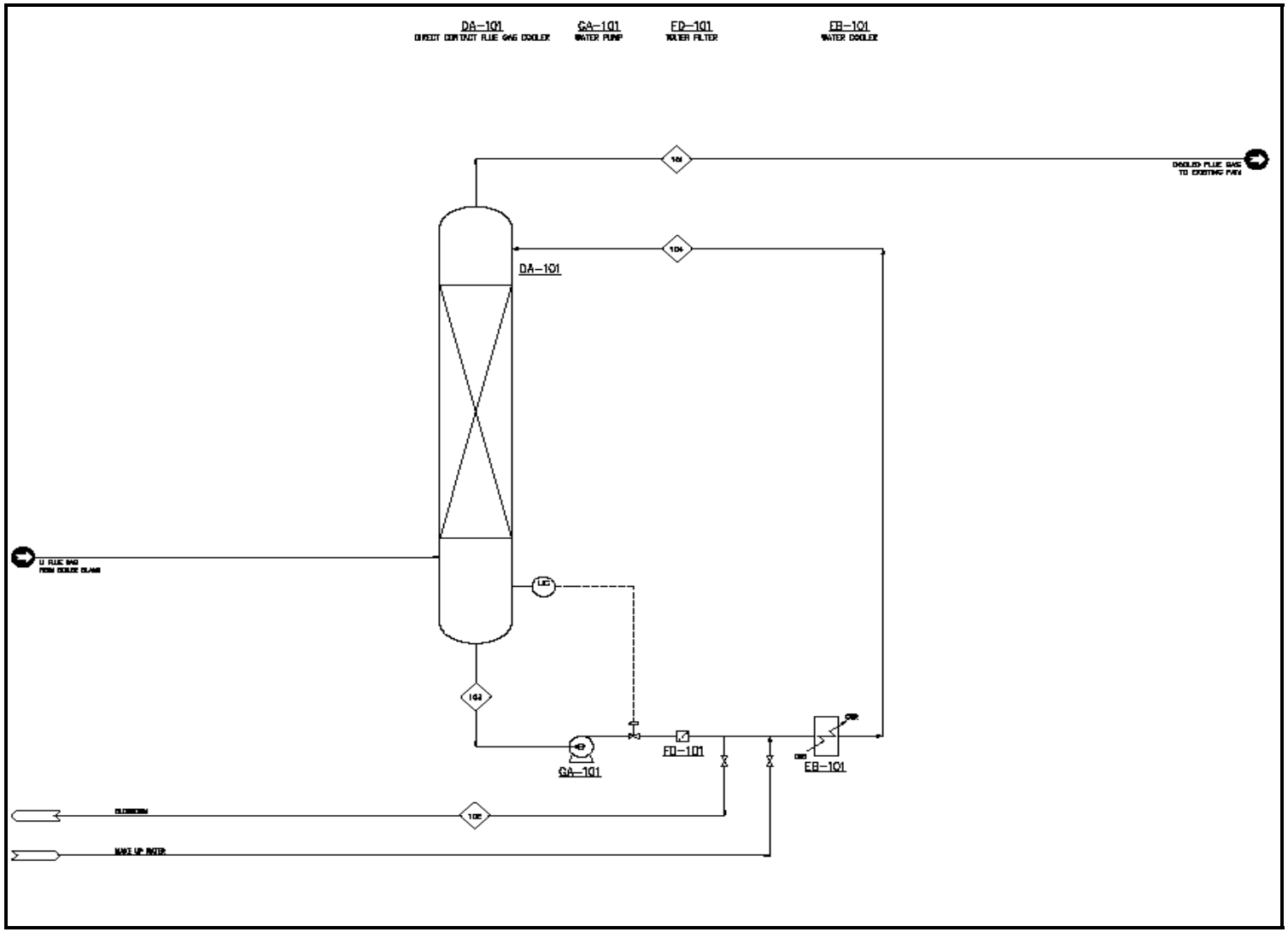

Figure 4.18: Case-2 Process Flow Diagram for Flue Gas Quenching

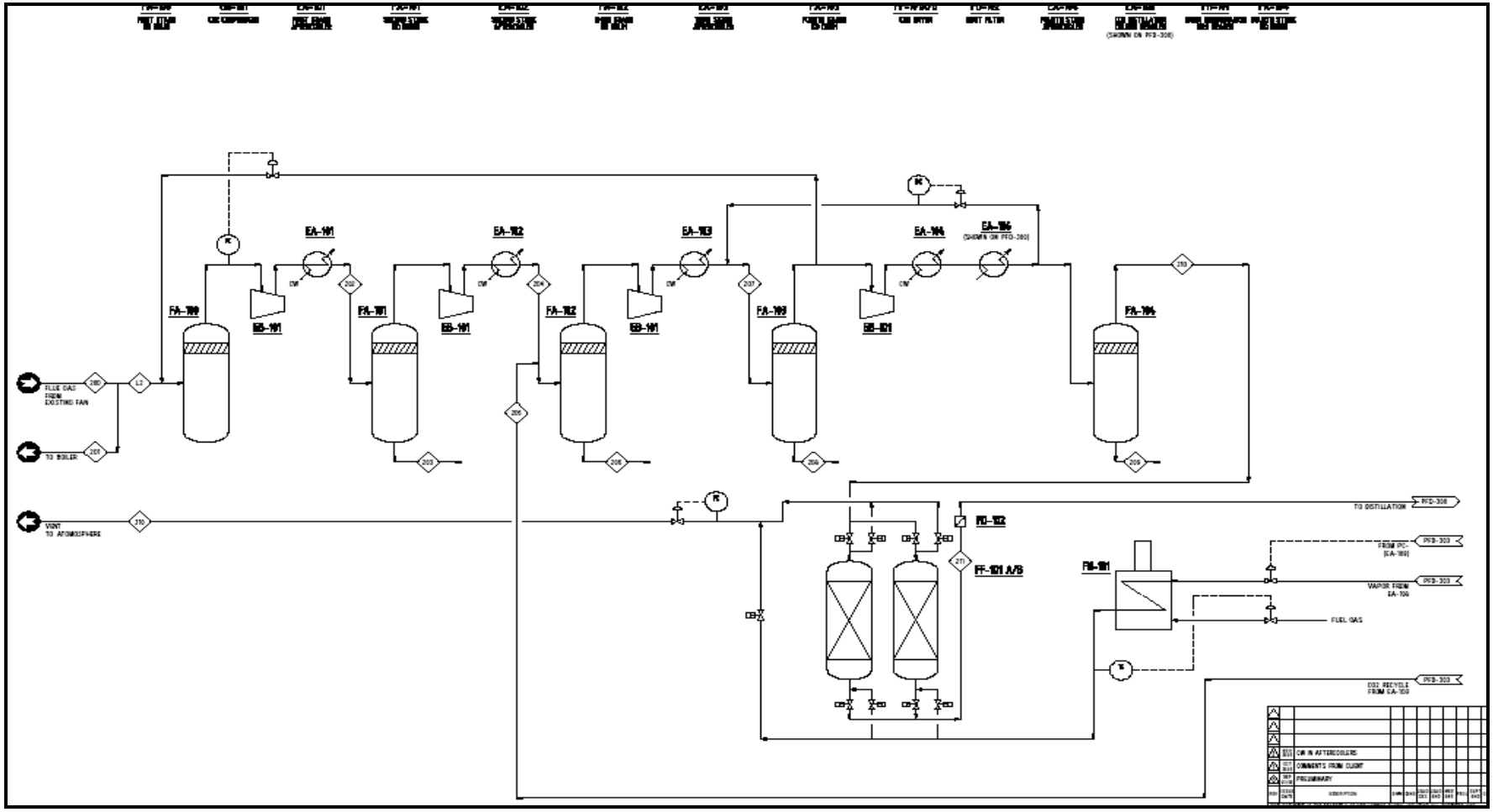

Figure 4.19: Case-2 Process Flow Diagram for Flue Gas Compression

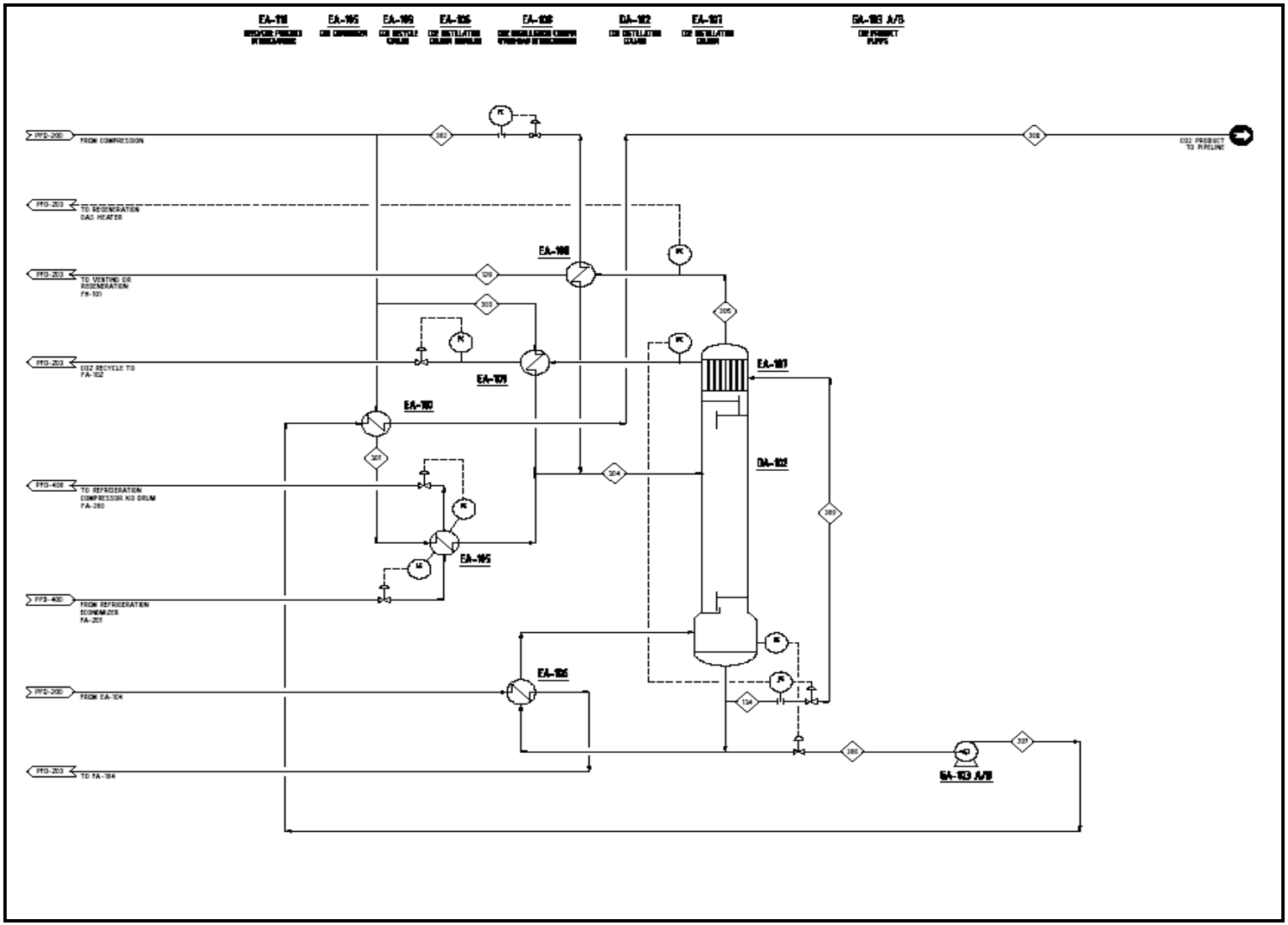

Figure 4.20: Case-2 Process Flow Diagram for Distillation

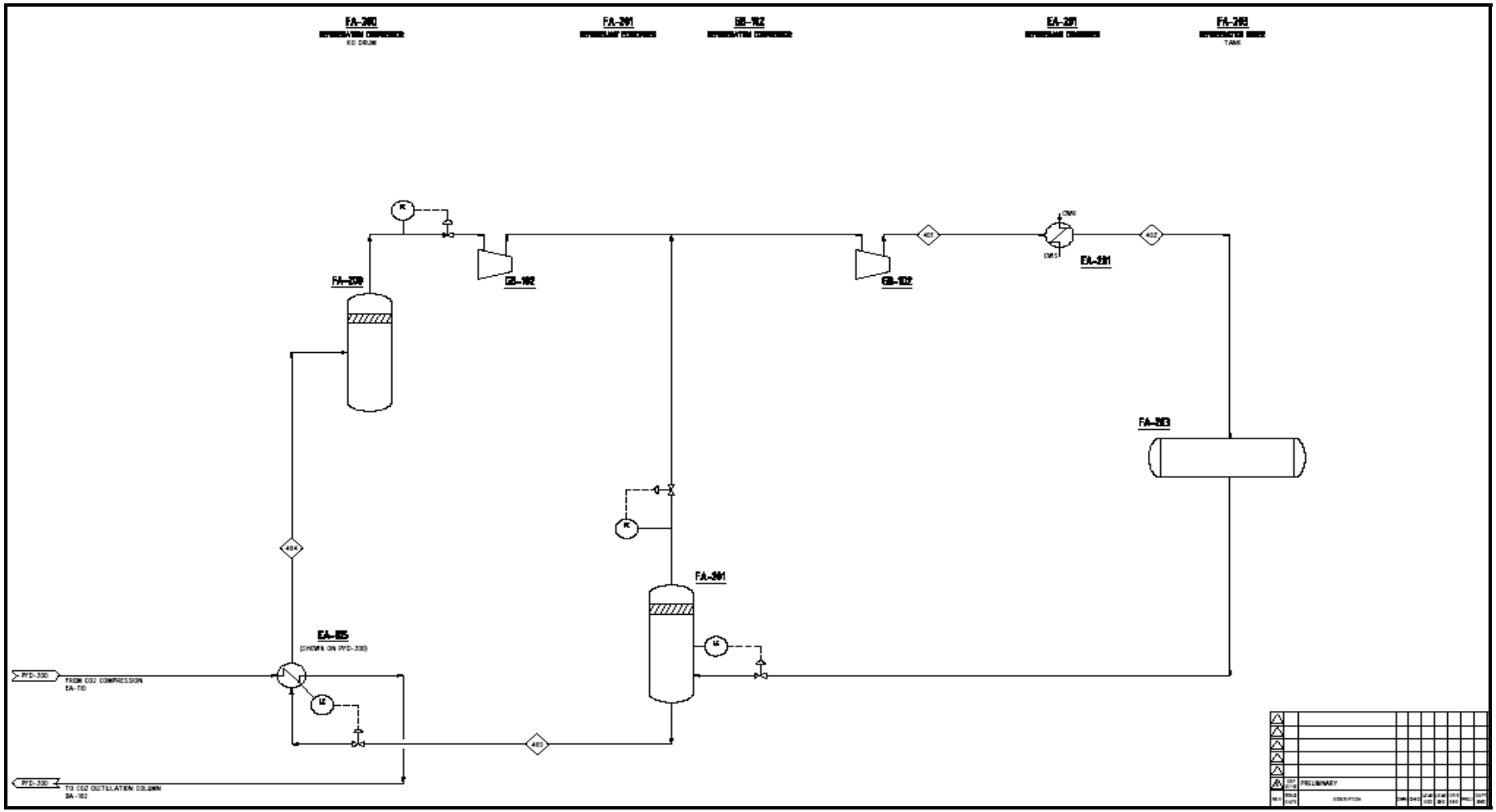

Figure 4.21: Case-2 Process Flow Diagram for Propane Refrigeration

Material and Energy Balance:

Table 4.14 contains the overall material and energy balance for the Flue Gas Cooling System and the CO_2 Compression, Distillation, and Liquefaction System described above. It is based on more than 94 percent recovery of CO_2 from the feed stream. Please refer to the Process Flow Diagrams shown in the previous section for the stream numbers shown in this table.

It is important to note that the CO_2 product to the pipeline (Stream 308 Table 4.14) meets the Dakota Gasification Specifications (Dakota Gasification Company, 2005) (Table 4.13) with respect to CO_2 (99.8% vs. >96%), O_2 (95 ppmv vs. 100 ppmv, N_2 (19 ppmv vs. 6,000 ppmv), and H_2O (0.5 ppmv vs. 2.0 ppmv). The concentration of SO_2 in the CO_2 product is 0.17%, as it is not eliminated in the distillation column. There is no oxidized sulfur as SO_2 in the Dakota product gas since it comes from a gasification process. There is no experience to indicate what an appropriate SO_2 limit is. If it is less than can be achieved by CFB combined with FDA, then additional removal will be required. This could be done with a caustic scrubber just before the GPS.

Table 4.14: Gas Processing System Material & Energy Balance

STREAM NAME		Flue gas from Boiler Island	From quench tower	blowdown	quench water out	quench water in	From blower	to liquefaction train	to boiler	to second stage	2nd water KO	to 3rd stage	recycle from condenser	3rd water KO	to 4th stage	4th water scrubber	4th water KO	To drier	From drier	To refrig chiller	To inerts exchanger
PFD STREAM NO.		L1	101	102	103	104	200	L2	201	202	203	204	205	206	207	208	209	210	211	301	302
VAPOR FRACTION	Molar	1.000	1.000	0.000	0.000	0.000	1.000	1.000	1.000	0.962	0.000	0.980	1.000	0.000	0.997	0.000	0.000	1.000	1.000	1.000	1.000
TEMPERATURE	°F	159.0	100.0	126.6	126.3	90.0	109.0	109.0	109.0	105.0	105.0	105.0	-30.1	88.8	105.0	105.0	36.4	36.4	45.0	40.0	44.3
	°C	70.6	37.8	52.5	52.4	32.2	42.8	42.8	42.8	40.6	40.6	40.6	-34.5	31.6	40.6	40.6	2.5	2.5	7.2	4.4	6.8
PRESSURE	PSIA	14	14	60	14	18	15	15	15	35	35	97	94	94	299	299	440	440	433	423	428
	Bara	0.96	0.96	4.14	0.96	1.24	1.01	1.01	1.01	2.44	2.44	6.70	6.47	6.47	20.59	20.59	30.34	30.34	29.86	29.17	29.52
MOLAR FLOW RATE	lbmol/hr	25,903	22,979	2,931	105,725	102,800	22,979	4,638	18,340	4,638	176	4,463	801	102	5,162	15	23	5,123	5,121	5,026	60
MASS FLOW RATE	lb/hr	993,239	940,764	52,828	1,905,309	1,852,834	940,764	189,903	750,861	189,903	3,168	186,735	35,274	1,847	220,162	274	437	219,450	219,408	215,358	2,550
	kg/hr	450,525	426,723	23,962	864,233	840,431	426,723	86,138	340,585	86,138	1,437	84,702	16,000	838	99,864	124	198	99,541	99,522	97,684	1,157
ENERGY	Btu/hr	-3.72E+09	-3.43E+09	-3.57E+08	-1.29E+10	-1.26E+10	-3.43E+09	-6.92E+08	-2.73E+09	-6.95E+08	-2.15E+07	-6.76E+08	-1.36E+08	-1.25E+07	-8.00E+08	-1.85E+06	-2.91E+06	-8.01E+08	-8.00E+08	-7.85E+08	-9.30E+06
	kJ/hr	-3.92E+09	-3.62E+09	-3.77E+08	-1.36E+10	-1.33E+10	-3.61E+09	-7.30E+08	-2.88E+09	-7.33E+08	-2.27E+07	-7.13E+08	-1.44E+08	-1.32E+07	-8.44E+08	-1.95E+06	-3.07E+06	-8.45E+08	-8.44E+08	-8.29E+08	-9.81E+06
COMPOSITON	Mol %																				
CO2		74.43%	83.92%	0.02%	0.02%	0.03%	83.92%	83.92%	83.92%	83.92%	0.07%	87.22%	99.82%	0.24%	90.90%	0.62%	2.41%	91.57%	91.61%	91.61%	91.61%
Oxygen		3.08%	3.47%	0.00%	0.00%	0.00%	3.47%	3.47%	3.47%	3.47%	0.00%	3.60%	0.01%	0.00%	3.12%	0.00%	0.00%	3.14%	3.14%	3.14%	3.14%
Nitrogen		5.00%	5.63%	0.00%	0.00%	0.00%	5.63%	5.63%	5.63%	5.63%	0.00%	5.85%	0.00%	0.00%	5.06%	0.00%	0.00%	5.10%	5.10%	5.10%	5.10%
Argon		0.00%	0.00%	0.00%	0.00%	0.00%	0.00%	0.00%	0.00%	0.00%	0.00%	0.00%	0.00%	0.00%	0.00%	0.00%	0.00%	0.00%	0.00%	0.00%	0.00%
NO		0.00%	0.00%	0.00%	0.00%	0.00%	0.00%	0.00%	0.00%	0.00%	0.00%	0.00%	0.00%	0.00%	0.00%	0.00%	0.00%	0.00%	0.00%	0.00%	0.00%
H2O		17.39%	6.84%	99.98%	99.98%	99.97%	6.84%	6.84%	6.84%	6.84%	99.92%	3.18%	0.00%	99.74%	0.78%	99.33%	97.42%	0.05%	0.00%	0.00%	0.00%
SO2		0.11%	0.14%	0.00%	0.00%	0.00%	0.14%	0.14%	0.14%	0.14%	0.01%	0.14%	0.17%	0.02%	0.15%	0.05%	0.17%	0.15%	0.15%	0.15%	0.15%
VAPOR																					
MOLAR FLOW RATE	lbmol/hr	25,903	22,979	-	-	-	22,979	4,638	18,340	4,463	-	4,374	801	-	5,147	-	-	5,123	5,121	5,026	60
MASS FLOW RATE	lb/hr	993,239	940,764	-	-	-	940,764	189,903	750,861	186,735	-	185,135	35,274	-	219,887	-	-	219,450	219,408	215,358	2,550
	kg/hr	450,525	426,723	-	-	-	426,723	86,138	340,585	84,702	-	83,976	16,000	-	99,739	-	-	99,541	99,522	97,684	1,157
STD VOL. FLOW	MMSCFD	235.9	209.3	-	-	-	209.3	42.2	167.0	40.6	-	39.8	7.3	-	46.9	-	-	46.7	46.6	45.8	0.5
	MMSCMD	6.681	5.926	-	-	-	5.926	1.196	4.730	1.151	-	1.128	0.207	-	1.327	-	-	1.321	1.321	1.296	0.015
ACTUAL VOL. FLOW	ACFM	204,329	164,837	-	-	-	158,246	31,944	126,302	12,609	-	4,414	609	-	1,583	-	-	808	854	847	10
	ACMM	5,785.98	4,667.69	-	-	-	4,481.04	904.54	3,576.50	357.06	-	124.99	17.23	-	44.83	-	-	22.88	24.18	23.99	0.28
MOLECULAR WEIGHT	MW	38.34	40.94	-	-	-	40.94	40.94	40.94	41.84	-	42.32	44.04	-	42.73	-	-	42.83	42.85	42.85	42.85
DENSITY	lb/ft³	0.08	0.10	-	-	-	0.10	0.10	0.10	0.25	-	0.70	0.97	-	2.31	-	-	4.53	4.28	4.24	4.23
	kg/m³	0.0010	0.0012	-	-	-	0.0013	0.0013	0.0013	0.0032	-	0.0090	0.0124	-	0.0298	-	-	0.0582	0.0551	0.0545	0.0544
VISCOSITY	cP	0.0153	0.0149	-	-	-	0.0152	0.0152	0.0152	0.0156	-	0.0160	0.0117	-	0.0166	-	-	0.0153	0.0154	0.0153	0.0154
HEAVY LIQUID																					
MOLAR FLOW RATE	lbmol/hr	-	-	2,931	105,725	102,800	-	-	-	176	176	88	-	102	15	15	23	-	-	-	-
MASS FLOW RATE	lb/hr	-	-	52,828	1,905,309	1,852,834	-	-	-	3,168	3,168	1,600	-	1,847	274	274	437	-	-	-	-
	kg/hr	-	-	23,962.3	864,233.0	840,430.8	-	-	-	1,437	1,436.95	726	-	837.82	124	124.39	198.23	-	-	-	-
STD VOL. FLOW	BPD	-	-	3,625	130,737	127,138	-	-	-	217	217	110	-	127	19	19	30	-	-	-	-
	M³/D	-	-	432	15,589	15,160	-	-	-	26	26	13	-	15	2	2	4	-	-	-	-
ACTUAL VOL. FLOW	GPM	-	-	107	3,857	3,693	-	-	-	6	6	3	-	4	1	1	1	-	-	-	-
	M³/M	-	-	0.40	14.60	13.98	-	-	-	0.02	0.02	0.01	-	0.01	0.00	0.00	0.00	-	-	-	-
DENSITY	lb/ft³	-	-	61.58	61.58	62.55	-	-	-	62.17	62.17	62.22	-	62.66	62.36	62.36	64.73	-	-	-	-
	kg/m³	-	-	0.7917	0.7917	0.8042	-	-	-	0.7993	0.7993	0.7999	-	0.8056	0.8017	0.8017	0.8321	-	-	-	-
VISCOSITY	cP	-	-	0.5215	0.5229	0.7606	-	-	-	0.6446	0.6446	0.6809	-	0.7989	0.6730	0.6730	1.3485	-	-	-	-
SURFACE TENSION	Dyne/Cm	-	-	67.27	67.30	70.83	-	-	-	69.34	69.34	69.24	-	70.78	68.94	68.94	74.24	-	-	-	-

No.	Date	By	REVISION
3	14-Nov-05	PJ	Cooling Water for aftercoolers
2	11-Nov-05	PJ	Optimized BFW to aftercoolers
1	26-Sep-05	PJ	Revised fuel gas compositon
0	7-Sep-05	PJ	For Study

NOTES:

ABB

Alstom
Wheeling, W VA
Commercialization of O2 CFB
Heat & Material Balance
ALSTOM_FINAL_REV_3_CW
JOB NO: 12 916 REV. 3

Table 4.14 (Continued)

STREAM NAME		To CO2 recirc exchanger	To distillation column	Non condensables from distillation column	CO2 product from distillation column	CO2 product from pump	CO2 product to pipeline	CO2 recirculation	Refrigeration compressor discharge	Refrigeration condenser outlet	Refrigerant to CO2 condenser	Refrigerant from CO2 condenser	Non condensables from distillation column	Warm non condensable
PFD STREAM NO.		**303**	**304**	**305**	**306**	**307**	**308**	**309**	**401**	**402**	**403**	**404**	**129**	**310**
VAPOR FRACTION	Molar	1.000	0.176	1.000	0.000	0.000	0.000	0.000	1.000	0.000	0.000	1.000	1.000	1.000
TEMPERATURE	°F	44.3	-12.4	-50.0	19.9	35.9	38.8	19.9	154.3	110.0	40.6	-19.0	10.2	215.1
	°C	6.8	-24.7	-45.6	-6.7	2.2	3.8	-6.7	67.9	43.3	4.8	-28.3	-12.1	101.7
PRESSURE	PSIA	428	418	410	415	2,018	2,015	415	223	218	80	25	405	15
	Bara	29.51	28.83	28.28	28.62	139.14	138.97	28.62	15.40	15.05	5.52	1.75	27.93	1.01
MOLAR FLOW RATE	lbmol/hr	35	5,121	643	3,677	3,677	3,677	801	5,404	5,404	3,850	3,850	643	645
MASS FLOW RATE	lb/hr	1,500	219,408	22,189	161,945	161,945	161,945	35,274	238,305	238,305	170,120	170,120	22,189	22,232
	kg/hr	680	99,522	10,065	73,457	73,457	73,457	16,000	108,093	108,093	77,165	77,165	10,065	10,084
ENERGY	Btu/hr	-5.47E+06	-8.25E+08	-3.83E+07	-6.45E+08	-6.44E+08	-6.44E+08	-1.41E+08	-2.38E+08	-2.74E+08	-2.03E+08	-1.79E+08	-3.79E+07	-3.70E+07
	kJ/hr	-5.77E+06	-8.70E+08	-4.04E+07	-6.81E+08	-6.80E+08	-6.79E+08	-1.48E+08	-2.51E+08	-2.89E+08	-2.14E+08	-1.89E+08	-4.00E+07	-3.90E+07
COMPOSITON	Mol %													
CO2		91.61%	91.61%	34.42%	99.82%	99.82%	99.8185%	99.82%	0.00%	0.00%	0.00%	0.00%	34.42%	34.29%
Oxygen		3.14%	3.14%	24.97%	0.01%	0.01%	0.0095%	0.01%	0.00%	0.00%	0.00%	0.00%	24.97%	24.88%
Nitrogen		5.10%	5.10%	40.61%	0.00%	0.00%	0.0019%	0.00%	0.00%	0.00%	0.00%	0.00%	40.61%	40.46%
Argon		0.00%	0.00%	0.00%	0.00%	0.00%	0.0000%	0.00%	0.00%	0.00%	0.00%	0.00%	0.00%	0.00%
NO		0.00%	0.00%	0.00%	0.00%	0.00%	0.0000%	0.00%	0.00%	0.00%	0.00%	0.00%	0.00%	0.00%
H2O		0.00%	0.00%	0.00%	0.00%	0.00%	0.0001%	0.00%	0.00%	0.00%	0.00%	0.00%	0.00%	0.37%
SO2		0.15%	0.15%	0.00%	0.17%	0.17%	0.1701%	0.17%	0.00%	0.00%	0.00%	0.00%	0.00%	0.00%
VAPOR														
MOLAR FLOW RATE	lbmol/hr	35	899	643	-	-	-	-	5,404	-	-	3,850	643	645
MASS FLOW RATE	lb/hr	1,500	34,941	22,189	-	-	-	-	238,305	-	-	170,120	22,189	22,231.69
	kg/hr	680	15,849	10,065	-	-	-	-	108,093	-	-	77,165	10,065	10,084.12
STD VOL. FLOW	MMSCFD	0.3	8.2	5.9	-	-	-	-	49.2	-	-	35.1	5.9	5.9
	MMSCMD	0.009	0.232	0.166	-	-	-	-	1.394	-	-	0.993	0.166	0.166
ACTUAL VOL. FLOW	ACFM	6	140	100	-	-	-	-	2,136	-	-	11,366	123	5,293.52
	ACMM	0.17	3.97	2.82	-	-	-	-	60.48	-	-	321.85	3.47	149.90
MOLECULAR WEIGHT	MW	42.85	38.85	34.51	-	-	-	-	44.10	-	-	44.19	34.51	34.45
DENSITY	lb/ft³	4.23	4.15	3.71	-	-	-	-	1.86	-	-	0.25	3.02	0.07
	kg/m³	0.0544	0.0534	0.0477	-	-	-	-	0.0239	-	-	0.0032	0.0388	0.0009
VISCOSITY	cP	0.0154	0.0149	0.0149	-	-	-	-	0.0102	-	-	0.0067	0.0168	0.0222
LIGHT LIQUID														
MOLAR FLOW RATE	lbmol/hr	-	4,222	-	3,677	3,677	3,677	801	-	5,404	3,850	-	-	-
MASS FLOW RATE	lb/hr	-	184,466	-	161,945	161,945	161,945	35,274	-	238,305	170,120	-	-	-
	kg/hr	-	83,672	-	73,457.0	73,457.0	73,457.0	15,999.8	-	108,093	77,165	-	-	-
STD VOL. FLOW	BPD	-	15,258	-	13,422	13,422	13,422	2,923	-	32,256	22,991	-	-	-
	M³/D	-	1,819	-	1,600	1,600	1,600	349	-	3,846	2,741	-	-	-
ACTUAL VOL. FLOW	GPM	-	356	-	334	322	324	73	-	1,032	650	-	-	-
	M³/M	-	1.35	-	1.26	1.22	1.23	0.28	-	3.90	2.46	-	-	-
DENSITY	lb/ft³	-	64.55	-	60.42	62.80	62.37	60.42	-	28.80	32.63	-	-	-
	kg/m³	-	0.8299	-	0.7768	0.8073	0.8019	0.7768	-	0.3703	0.4195	-	-	-
MOLECULAR WEIGHT	MW	-	43.70	-	44.04	44.04	44.04	44.04	-	44.10	44.19	-	-	-
VISCOSITY	cP	-	0.1494	-	0.1197	0.1099	0.1072	0.1197	-	0.0834	0.1220	-	-	-
SURFACE TENSION	Dyne/Cm	-	13.86	-	9.71	7.48	7.07	9.71	-	4.79	9.35	-	-	-

No.	Date	By	REVISION
3	14-Nov-05	PJ	Cooling Water for aftercoolers
2	11-Nov-05	PJ	Optimized BFW to aftercoolers
1	26-Sep-05	PJ	Revised fuel gas compositon
0	7-Sep-05	PJ	For Study

NOTES:

ABB

Alstom
Wheeling, W VA
Commercialization of O2 CFB
Heat & Material Balance
ALSTOM_FINAL_REV_3_CW
JOB NO: 12 916 REV. 3

Gas Processing System Utilities:

The following tables define the cooling water, natural gas, and electrical requirements for the Gas Processing System described previously.

Table 4.15: Case-2 Gas Processing System Cooling Water and Fuel Gas Requirements

COOLING WATER (Compressor Aftercoolers)

	Equipment		No.	DUTY		INLET TEMPERATURE		OUTLET TEMPERATURE		FLOWRATE	
REV	TAG NO	**SERVICE**	Installed	MMBTU/HR	kJ/HR	DEG F	DEG C	DEG F	DEG C	LB/HR	KG/HR
3	EA-101	FG Comp 1 stg after cooler	1	10.90	11.50	85	29	105	41	545,000	247,208
3	EA-102	FG Comp 2 stg after cooler	1	9.32	9.83	85	29	105	41	466,000	211,374
3	EA-103	FG Comp 3 stg after cooler	1	9.77	10.31	85	29	105	41	488,500	221,580
3	EA-104	FG Comp 4 stg after cooler	1	3.86	4.07	85	29	105	41	193,000	87,543
		TOTALCOOLING WATER		33.85	35.70					1,692,500	767,704

COOLING WATER (Other)

	Equipment		No.	DUTY		INLET TEMPERATURE		OUTLET TEMPERATURE		FLOWRATE	
REV	TAG NO	**SERVICE**	Installed	MMBTU/HR	kJ/HR	DEG F	DEG C	DEG F	DEG C	LB/HR	KG/HR
3	EA-201	Refrig Condenser	1	37.00	39.03	85	29	100	38	2,466,667	1,118,860
3	EB-101	Water Cooler	1	67.60	71.30	85	29	105	41	3,380,000	1,533,141
		TOTAL COOLING WATER		104.60	110.33					5,846,667	2,652,001

FUEL GAS FUEL GAS VALUE BASIS: 930 BTU/SCF (LHV)

	Equipment		ONLINE	DUTY		EFFICIENCY	FLOWRATE (Peak)				FLOW (Avg)	
REV	TAG NO	**SERVICE**	FACTOR	MMBTU/HR	kJ/HR	%	MMSCFD	MMSCMD	SCFH	SCMH	MMSCFD	MMSCMD
3	FH-101	Alumina Drier Regeneration	61%	4.60	4.85	80%	0.148	0.00420	6,183	175	0.091	0.0026
		TOTAL FUEL GAS		4.60	4.85		0.148	0.00420	6,183	175	0.091	0.0026

Table 4.16: Case-2 Gas Processing System Electrical Requirements

Number of trains	**Item Number**	**Service**	**Brake Power (ea)**	**motor efficiency**	**Power**
			(kW)	(frac)	(kW)
1	**GB-100**	1 Stage	2,161	0.95	2,275
1		2 Stage	2,171	0.95	2,285
1		3 Stage	2,677	0.95	2,818
1		4 Stage	840	0.95	884
		sub total	7,849		8,262
		gear losses		0.02	165
		Electric Motor Input			**8,427**
		1.1 API Standard			826
		motor rating			9,254
1	**GB-101**	1 Stage	1,629	0.95	1,715
1		2 Stage	1,992	0.95	2,097
		sub total	3,621		3,812
		1.02 gear losses		0.02	76
		Electric Motor Input			**3,888**
		1.1 API Standard			381
		motor rating			4,269
1	**GA-101**	Water pump	159	0.95	**167**
1	**GA-103**	CO2 Pipeline pump	311	0.95	**327**
		Total Electrical Input			**12,810**

Gas Processing System Equipment:

A layout drawing showing a general arrangement plot plan for the GPS equipment is shown in Appendix I: Plant Drawings (Section 7.1). The equipment list for the Gas Processing System is provided in Appendix II: Plant Equipment Lists (Section 7.2.2).

4.4.5 Case-2: Air Separation Unit (ASU): Process Description, Performance, and Equipment

This section presents the process requirements for the warm end and cold box for the air separation plant. It will be designed to produce nominally 1,640 tonne (1,800 tons) per day (TPD) of oxygen.

The power requirements, utility requirements, staffing and other O&M costs were prorated from ASU information (provided by Praxair) used in a previous study (Marion, et al., 2003). The following subsections are provided to summarize this information:

- Air Separation Unit Ambient Design Basis
- Air Separation Unit Production Rates and Purities
- Air Separation Unit Process Description, Process Flow Diagram and Equipment
- Air Separation Unit Utility Summary
- Air Separation Unit Chemical Requirements
- Air Separation Unit Operating Manpower

Air Separation Unit Ambient Design Basis:

The ambient conditions presented in Table 4.17 below were used to evaluate the ASU system performance and to generate the utility summary.

Table 4.17: Ambient Conditions Used for ASU Design

Item	SI Units		English Units	
	Value	Units	Value	Units
Barometric Pressure	1.013	Bara	14.7	Psia
Dry Bulb Temperature	26.7	°C	80	°F
Hot Dry Bulb Temperature	35	°C	95	°F
Cold Day Temperature	-6.7	°C	20	°F
Wet Bulb Temperature	11.1	°C	52	°F
Cooling Water Temperature	32.2	°C	90	°F

Air Separation Unit Production Rates and Purities:

The production rate indicated below in Table 4.18 shows the net mass flow-rate provided from the Air Separation Unit's Cold Box.

Table 4.18: ASU Oxygen Production and Purity

Plant Site	Oxygen		Pressure		Purity
	tonne/day Contained O_2)	ton/day Contained O_2	bara	psia	(%O_2)
Southeast US	1,590	1,750	1.24	18.0	99.0

Air Separation Unit Process Description, Process Flow Diagram and Equipment:

The process and equipment description below refers to the Process Flow Diagram shown in Figure 4.22 below. A layout drawing showing a plot plan for the ASU equipment is shown in Appendix I: Plant Drawings (Section 7.1). The equipment list for this 1,600 tonne/day (1,800 ton/day) ASU is provided in Appendix II: Plant Equipment Lists (Section 7.2.3).

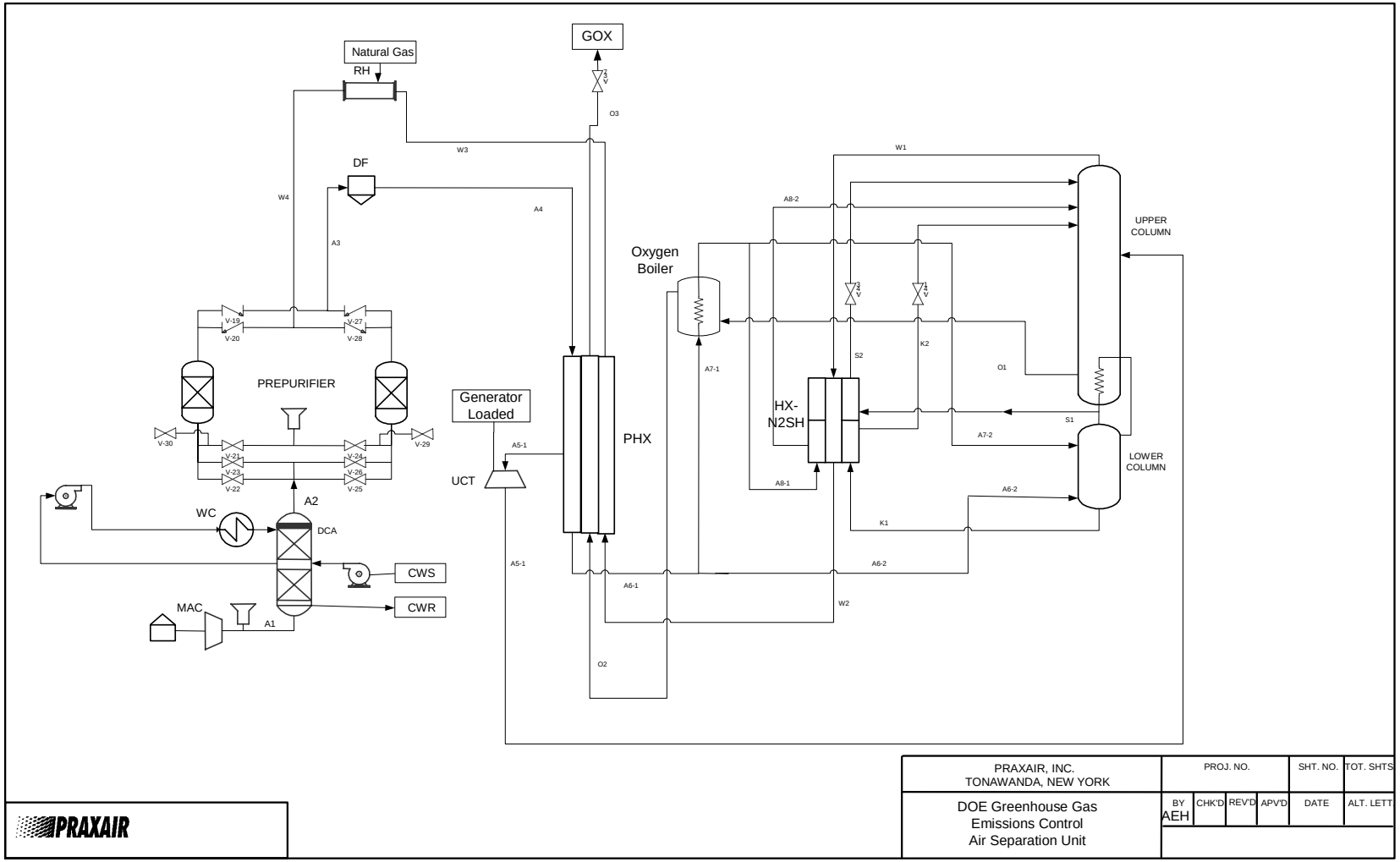

Figure 4.22: Case-2 Air Separation Unit Process Flow Diagram

Air Compression:
Ambient air is drawn through the air suction filter house (ASFH) for the removal of large airborne particles prior to entering the main air compressor (MAC). The compressor is a 3-stage high efficiency integral gear centrifugal compressor. Included with the compressor are adjustable inlet guide vanes, coupling with guard, lube oil system and two aftercoolers. The aftercoolers (shell and tube heat exchangers) are part of a low-level heat recovery system, which is integrated with the plant steam cycle. Additional aftercooling of the MAC is also accomplished with a two stage Direct Contact Aftercooler (DCA) that is located after the 3rd stage shell and tube aftercooler. Air is cooled in the DCA by exchanging heat with cooling water in the first stage and with chilled water provided by a mechanical chiller in the second stage.

Pre-purification:
The after-cooled air is then passed through the pre-purification system. The pre-purification system uses a two bed temperature-swing adsorption (TSA) process that allows continuous operation. One bed purifies the feed air while the other bed is being regenerated with first hot then cool waste nitrogen. A natural gas regeneration heater provides regeneration energy. The pre-purifier beds utilize a split adsorbent design (molecular sieve and alumina) to remove water, carbon dioxide, and most of the hydrocarbons from the air stream. After pre-purification, the air stream is passed through a dust filter to remove any solid particles.

Air Feed Streams:
The cold box requires one air feed stream. This stream is sent through the Primary Heat Exchanger (PHX) and then split into three streams. One stream is fed to the bottom of the lower column. The second air stream is fed to the oxygen boiler. The third air stream (turbine air) is cooled partially in the PHX and fed to the turbine. Adjusting the turbine airflow can modulate the total amount of refrigeration generated by the cold box.

Cold Box:
The air stream to the oxygen boiler is cooled and condensed against product oxygen and sent to both the upper and lower column.

The turbine air stream is cooled against warming nitrogen and oxygen streams. It is drawn from an intermediate location between the warm leg and the cold leg of the PHX. It is then expanded and cooled in the upper column turbine (UCT). The UCT stream enters two thirds of the way down the upper (low-pressure) distillation column.

The air entering the lower column is separated into nitrogen at the top and oxygen-enriched air (kettle liquid) at the bottom. The nitrogen at the top of the column is condensed in the main condenser against boiling oxygen from the upper column. A portion of the condensed nitrogen from the main condenser is used as reflux for the lower column. The remainder is subcooled in the cross flow passages in the nitrogen superheater section of the PHX against warming gaseous nitrogen streams from the upper column. This subcooled liquid nitrogen stream then enters the top of the upper column as reflux. The kettle liquid is subcooled in the cross flow passes of the nitrogen superheater section of the PHX and then enters the upper about 2/3 of the way down the column.

The upper column produces high purity liquid oxygen (>99.0 percent O_2) in the bottom. The upper column also produces waste nitrogen from the top. The gaseous nitrogen

stream is warmed in all sections of the PHX to near-ambient temperatures. The product oxygen is boiled in the oxygen boiler against the condensing air stream and exits as product.

Products:
Gaseous oxygen is available at pressure directly from the cold box and delivered to the battery limit at 0.23 barg (3.3 psig).

Air Separation Unit Utility Summary:

The following tables show the expected electricity and natural gas usage for the ASU. The utilities presented here are for nominally 1,650 tonne/day (1,800 tons/day) of oxygen.

Table 4.19: ASU Electrical Usage

	1756 T/D
Components	kW
BLAC	16539
Turbine	-201
Water Chiller	633
DCA Pumps	77
Misc. (Incl. Lube Oil)	34
Total	17,081

Table 4.20: ASU Natural Gas Usage

Natural Gas used for 1/3 of time	
Natural Gas Use - peak (kg/hr; lbm/hr)	328; 723

Air Separation Unit Chemical Requirements:

There are no major on-going chemical requirements, as follows:

- Cooling Water is supplied by others, thus major treatment chemicals are part of this supply.
- With a small closed loop cooling system, some minor treatment chemicals will be required.
- Minor consumable items such as analyzer zero span and fuel gas cylinders, as well as, lube oil top-off will be required.
- Pre-purifier adsorbent is included in plant pricing and is typically not replaced.
- To cover minor consumables, approximately $20,000/year is estimated.

Air Separation Unit Operating Manpower:

- The operating staff is shown in Table 4.21. It is assumed that the existing power

plant staffing covers the positions of Supervisor, Plant Engineering/Assistant Manager, and ASU Maintenance staff (Mechanical & Instrumentation). Therefore only the ASU Operators (4 per shift) are included in the ASU Operating & Maintenance fixed costs account shown in Section 4.5.

- Major maintenance would be staffed externally – either from the power plant staff or contractors.

Table 4.21: ASU Operating Manpower

Supervisor	1
Plant Engineering/Assistant Manager	1
Operators	4
Maintenance (Mechanical & Instrumentation)	2

4.4.6 Case-2: Balance of Plant Equipment and Performance

The balance of plant equipment and performance description provided in this section discusses only areas where there are major differences relative to Case-1. Most of the existing balance of plant equipment is unchanged for Case-2. The primary change is the addition to the steam cycle of a system for the recovery of low-level heat from the ASU and GPS. The heat is recovered in the low temperature condensate stream discharged from the existing condensate pump.

Case-2 Steam Cycle Performance and Equipment:

This section describes the performance and equipment used in the Case-2 steam cycle. Additionally, differences as compared to Case-1 are discussed.

Case-2 Steam Cycle Performance:

The steam cycle was modified somewhat for Case-2 with the integration of low level heat recovery from the ASU. The steam cycle for Case-2 is shown schematically in Figure 4.23. The steam cycle is nearly identical to that for Case-1 (see Figure 4.3), differing only in the integration of low-level heat recovery systems for Case-2. The existing steam turbine is a nominal 100 MWe single reheat machine with steam conditions of 138 barg 538 °C / 538 °C (2.000 psig 1,000 °F / 1,000 °F) and a condenser pressure of 7.6 cm Hga (3.0 in Hga). The main steam flow (284401 kg/hr, 627,000 lbm/hr) and cold reheat steam flow (257,375 kg/hr, 567,418lbm/hr) are identical for both cases. Six extraction feedwater heaters are used for each case. Case-2, however, partially bypasses condensate around the existing low-pressure extraction feedwater heaters #1 and #2.

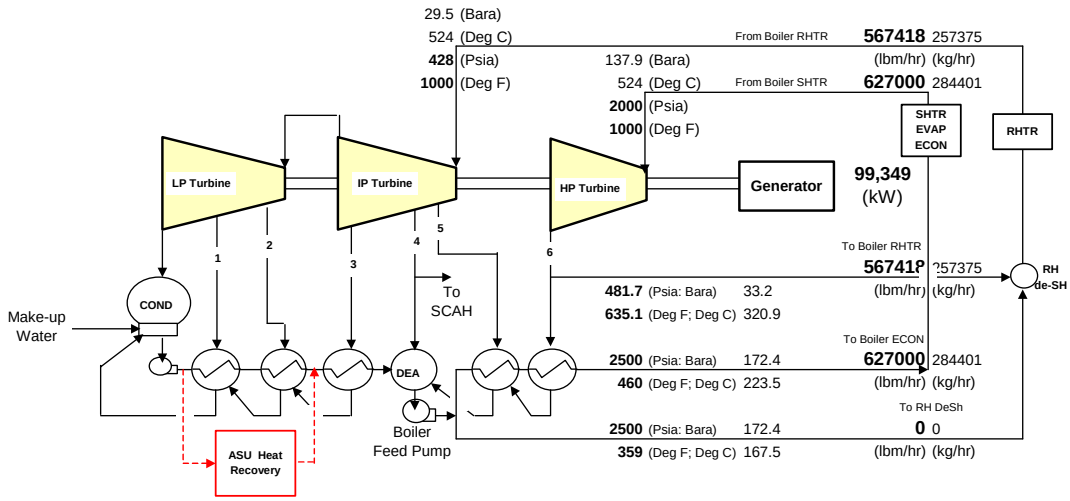

Steam Cycle Energy Balance

Energy Outputs	(10^6 Btu/hr)	(10^6 KJ/hr)	Energy Inputs	(10^6 Btu/hr)	(10^6 KJ/hr)
Steam Turbine Power Output	345.6	364.6	Boiler Heat Input	760.8	802.4
SCAH Heat Output	0.0	0.0	ASU Input	48.0	50.6
Condenser Loss	469.3	495.0	BFP & CP Input	6.2	6.5
Total Energy Output	814.9	859.6	**Total Energy Input**	814.9	859.6
			In - Out	0.0	0.0

Turbine Heat Rate
8291 (Btu/kwhr)
8745 (KJ/kwhr)

Note:
Extraction Feedwater heaters #1 and #2 are partially bypassed for Case-2.

Figure 4.23: Case-2 Steam Cycle Schematic and Performance

The condensate bypass is done for the purpose of low temperature heat recovery in the ASU system. The final feedwater temperature is 237.8 °C (460 °F) for both cases. Figure 4.24 shows the associated T-S and H-S diagrams for the steam cycle state points of Case-2.

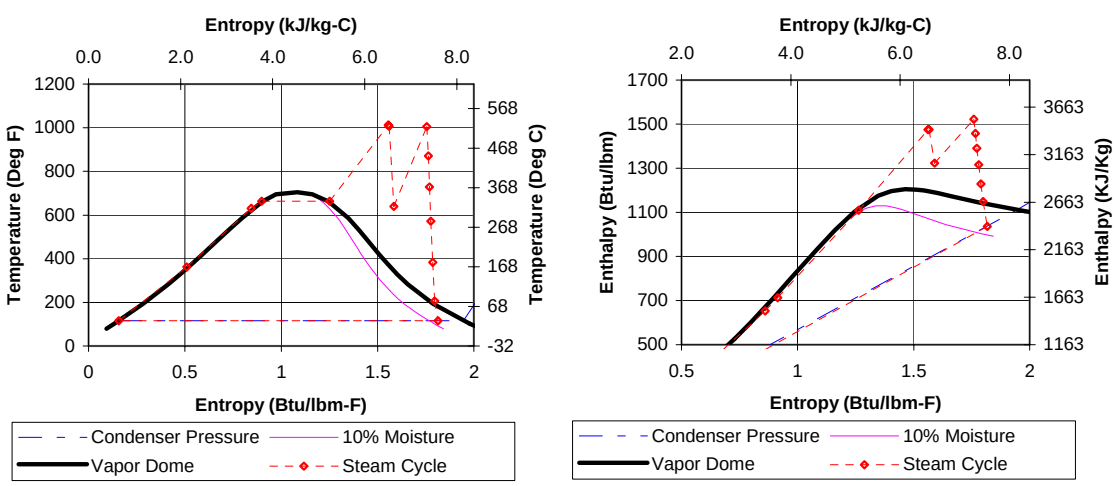

Figure 4.24: Case-2 Steam Cycle State Points Shown on T-S and H-S Coordinates

The steam turbine performance analysis results for Case-2 show the generator produces

about 99 MWe output and the steam turbine heat rate is about 8,745 kJ/kWh (8,291 Btu/kWh). The generator output, turbine heat rate and condenser losses are slightly higher for Case-2 than for Case-1. This is a result of the low level heat recovery system, which reduces extraction flows to the first two low-pressure extraction feedwater heaters and thus increases steam flow through the LP turbine and its associated power output.

Case-2 Steam Cycle Equipment (existing and new):

The steam cycle starts at the condenser hot well, which is a receptacle for the condensed steam from the exhaust of the steam turbine. The condensate flows to the suction of the condensate pumps (CP), which increase the pressure of the fluid by a nominal 10.3 bar (150-psi) to transport it through the piping system and enable it to enter the open contact heater, or deaerator. The condensate passes through a gland steam condenser, followed by three low-pressure extraction feedwater heaters in series. The heaters successively increase the condensate temperature to a nominal 148.3 °C (299 °F) by condensing and partially sub-cooling steam extracted from the LP steam turbine section. Each heater receives extraction steam at successively higher pressure and temperature. The condensed steam (now referred to as heater drains) is progressively passed to the next lower pressure heater, with the drains from the lowest heater draining to the condenser.

The Case-2 condensate heating system differs from Case 1 in that there are additional heat exchangers in parallel condensate streams with the two low-pressure extraction heaters as shown in Figure 4.23. The additional heat exchangers are shown schematically as a single component labeled "ASU Heat Recovery" located in the lower left corner of Figure 4.23. In reality, three parallel condensate streams are used to recover some of the heat rejected by the three ASU main air compressor aftercoolers.

This heat recovery system increases the generator output by about 1.6 MWe or about 1.6 percent as compared to Case-1. The condenser heat rejection is also increased by about 44.8 x 10^6 kJ/hr (42.5 x 10^6 Btu/hr) or about 10 percent as compared to Case-1.

The heated condensate streams leaving the ASU system are combined and mixed with condensate leaving the #2 heater before entering the # 3 heater. Condensate leaving the #3 heater is piped to the deaerator where the condensate is heated and stripped of non-condensable gases by direct contact with steam extracted from the steam turbine. The extracted steam is condensed and mixes with the heated condensate, which flows by gravity to a deaerator storage tank. The boiler feedwater pumps (BFP) take suction from the storage tank and increase the fluid pressure to a nominal 172.4 bara (2,500 psia). Both the condensate pump and boiler feed pump are electric motor driven pumps. The high-pressure feedwater leaving the BFP flows through two more high-pressure feedwater heaters, increasing in temperature to 237.8°C (460 °F) at the exit from the final feedwater heater (entrance to the boiler economizer section). Each feedwater heater receives a separate extraction steam stream at successively higher pressure and temperature. The condensed steam leaving the feedwater heaters (called drains) is progressively passed to the next lower pressure heater, with the drains from the lowest high pressure heater (heater #5) draining to the deaerator.

Within the CFB boiler system the warm feedwater leaving the feedwater system is further heated in the economizer, evaporated and finally superheated. The high-pressure superheated steam leaving the finishing superheater, 284,401 kg/hr (627,000 lbm/hr) of

steam at 138 bara (2,000 psia) and 538 °C (1,000 °F), is expanded through the high-pressure turbine. Reheat steam (257,375 kg/hr, 567,418 lbm/hr) is heated and returned to the intermediate pressure turbine at 29.5 bara (428 psia) and 538 °C (1,000 °F). These conditions represent common steam cycle operating conditions for current utility scale CFB power generation systems. The reheated steam expands through the intermediate and low-pressure turbines before exhausting to the condenser. The condenser pressure used for both cases in this study was 7.6 centimeters of mercury absolute (3.0 in Hga).

Other Balance of Plant Equipment:

Most of the other existing balance of plant systems and equipment for Case-2 are not affected by the retrofit to O_2 firing and CO_2 capture and are therefore identical to the existing systems used for Case-1. This equipment includes coal and limestone handling equipment (Note: limestone is not used in Case-2), coal and limestone preparation and feed equipment, ash handling equipment, and electrical equipment.

The cooling water system for Case-1 rejects heat primarily from the condenser and also small quantities from other equipment throughout the existing plant. For Case-2, this system is required to reject about 45 percent more heat than for Case-1. There are three factors that lead to the increase in the cooling water system heat rejection duty as listed below:

- Additional condenser heat rejection due to bypassing of the first two low-pressure feedwater heaters.
- Heat rejection from the Gas Processing System refrigeration condenser (EA-201), water cooler (EB-101), and compressor aftercoolers (EA-101 – EA-104).
- Heat rejection from the ASU stage #3 direct contact aftercooler (DCA).

It was assumed that the existing plant cooling water system would be able to handle this increased duty. This assumption was made knowing that the existing study unit is one of four identical units located on the existing site, which share a common cooling water system. Therefore, an increase of 45 percent from one of the units represents only about a 11.25 percent increase for the total plant cooling water system. This level of increase is typically well within the design margin for these systems and as such no additional cooling system equipment was added.

4.4.7 Case-2: Overall Plant Performance and CO_2 Emissions Summary

This section provides a summary and comparison of several important plant performance outputs from this study. Comparisons between Case-2 and Case-1 are provided.

Table 4.22 shows a fairly detailed comparison of plant performance and CO_2 emissions for the CO_2 recovery concept (Case-2) and the Base Case (Case-1) that employs no CO_2 recovery system for comparison. Selected results from this table are illustrated and compared in Figure 4.25 - Figure 4.30.

Table 4.22: Plant Performance and CO_2 Emissions Summary and Comparison

		Case-1: Air Fired CFB (Base-Case) w/o CO_2 Capture		Case-2: CFB Retrofit with O_2 Firing and CO_2 Capture	
Auxiliary Power Listing					
Power Plant Auxiliary Power	(Units)	(English)	(SI)	(English)	(SI)
Induced Draft Fan	(kW)	827	827	561	561
Primary Air Fan	(kW)	1209	1209	876	876
Secondary Air Fan	(kW)	364	364	259	259
Fluidizing Air Blowers	(kW)	551	551	602	602
Coal Handling, Preparation, and Feed	(kW)	136	136	138	138
Limestone Handling and Feed	(kW)	94	94	0	0
Limestone Blower	(kW)	71	71	0	0
Ash Handling	(kW)	95	95	48	48
Particulate Removal System Auxiliary Power (baghouse)	(kW)	182	182	298	298
Boiler Feed Pump	(kW)	1798	1798	1798	1798
Condensate Pump	(kW)	108	108	108	108
Circulating Water Pumps	(kW)	623	623	902	902
Cooling Tower Fans	(kW)	623	623	902	902
Steam Turbine Auxiliaries	(kW)	94	94	94	94
Misc. Auxiliary Power (Controls, Lighting, HVAC etc.)	(kW)	336	336	504	504
Transformer Loss	(kW)	220	220	223	223
Subtotal	(kW)	7331	7331	7313	7313
	(frac. of Gen. Output)	0.075	0.075	0.074	0.074
Auxiliary Power Summary					
Power Plant Auxiliary Power	(kW)	7331	7331	7313	7313
Air Separation Unit - ASU	(kW)	n/a	n/a	17081	17081
Gas Processing System - GPS (CO_2 purification, compression, liquefaction)	(kW)	n/a	n/a	12810	12810
Total Plant Auxiliary Power	(kW)	7331	7331	37204	37204
	(frac. of Gen. Output)	0.075	0.075	0.374	0.374
Steam Flows, Efficiencies and Electrical Outputs					
Main Steam Flow	(lbm/hr; kg/hr)	627000	284401	627000	284401
Reheat Steam Flow	(lbm/hr; kg/hr)	567418	257375	567418	257375
Boiler Efficiency (HHV)[1]	(fraction)	0.8946	0.8946	0.8875	0.8875
Steam Cycle Efficiency	(fraction)	0.4305	0.4305	0.4117	0.4117
Steam Turbine Generator Output	(kW)	97758	97758	99349	99349
Net Plant Output	(kW)	90427	90427	62144	62144
[1] Boiler Heat Output / (Qcoal-HHV + Qcredits)	(frac. of Case-1 Net Output)	1.00	1.00	0.69	0.69
Fuel Heat Inputs					
Coal Heat Input (HHV)	(10^6 Btu/hr; 10^6 KJ/hr)	843	890	852	899
Natural Gas Heat Input (HHV)[2]	(10^6 Btu/hr; 10^6 KJ/hr)	n/a	n/a	9.3	9.8
Total Fuel Heat Input (HHV)	(10^6 Btu/hr; 10^6 KJ/hr)	843	890	861	909
[2] Required for GPS & ASU Desiccant Regeneration in Case 2					
Overall Plant Efficiency					
Net Plant Heat Rate (HHV)	(Btu/kwhr; KJ/kwhr)	9328	9839	13861	14620
Net Plant Thermal Efficiency (HHV)	(fraction)	0.3659	0.3659	0.2462	0.2462
Normalized Thermal Efficiency (HHV; Relative to Base Case)	(fraction)	1.00	1.00	0.67	0.67
Energy Penalty	(fraction)	0.00	0.00	0.33	0.33
CO_2 Emissions					
CO_2 Produced	(lbm/hr; kg/hr)	175501	79605	172405	78201
CO_2 Captured	(lbm/hr; kg/hr)	0	0	161534	73270
Fraction of CO2 Captured	(fraction)	0.000	0.000	0.937	0.937
CO_2 Emitted	(lbm/hr; kg/hr)	175501	79605	10871	4931
Specific CO_2 Emissions	(lbm/kwhr; kg/kwhr)	1.94	0.88	0.17	0.08
Normalized Specific CO_2 Emissions (Relative to Base Case)	(fraction)	1.00	1.00	0.09	0.09
Avoided CO_2 Emissions (as compared to Base Case)	(lbm/kwhr; kg/kwhr)	0.00	0.00	1.77	0.80

Boiler Efficiency:

Figure 4.25 compares boiler efficiencies for the two cases. Case-1 (the air-fired Base Case) is slightly higher than the oxygen fired case primarily due to a lower dry gas loss. The lower dry gas loss is the result of lower flue gas flow (about 20 percent lower than for Case-2) and lower temperature exiting the air heater. The flue gas flow rate exiting the air heater is higher for Case-2 for a couple of reasons. Each case has approximately the same superficial gas velocity in the combustor. However, the O_2 fired case has a flue

gas composition with a high CO_2 composition whereas the air fired case has a typical air-fired flue gas composition with a high N_2 composition. Therefore, with both cases using nearly the same superficial gas velocity in the combustor, the higher flue gas molecular weight of the O_2 fired case causes a higher flue gas density and mass flow as compared to the air fired case. The higher air heater outlet temperature for the O_2 fired case is the result of higher oxidant temperature entering the existing air heater and the higher mass flows as described above. The boiler efficiency decrease for this existing unit is about 0.8 percentage points for Case-2.

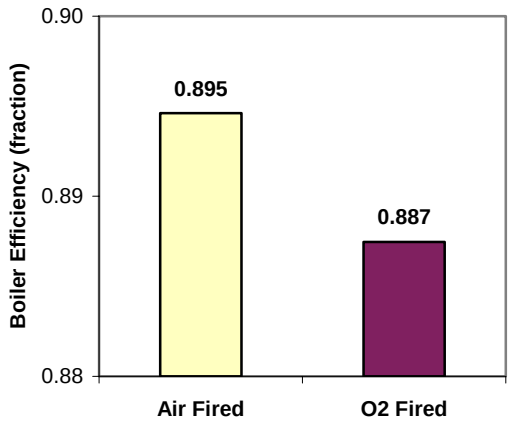

Figure 4.25: Boiler Efficiency Comparison

The boiler heat output is the same in each case since steam cycles that are nearly identical. The only difference in the steam cycles is the low-level heat recovery system for Case-2, described in the previous section, which has no impact on the required boiler heat output. Because of the slightly higher boiler efficiency, the air-fired Base Case has a slightly lower coal heat input (by about 1 percent) than the oxygen fired case.

Steam Cycle Efficiency:

Figure 4.26 compares steam cycle efficiency for the two cases. Case-1, the air-fired Base Case, has a higher steam cycle efficiency (by about 5 percent) than the oxygen fired Case 2. This is primarily due to the fact that in Case-1 there is no low-level heat recovery system. The low level-heat recovery system used in Case-2 provides heat (recovered from ASU) to the low-pressure condensate stream leaving the condenser, which for Case-1 was heated with the traditional low-pressure extraction feedwater heaters (Heaters #1 and #2).

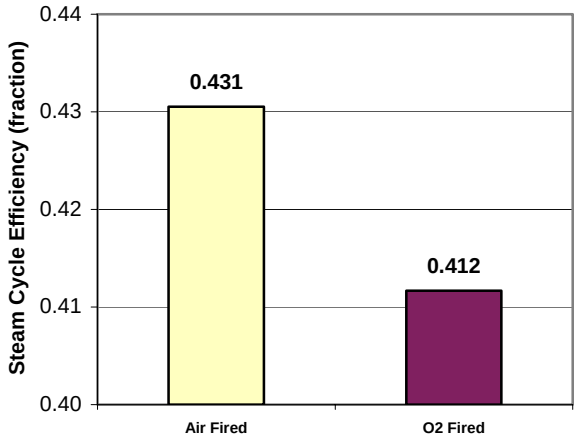

Figure 4.26: Steam Cycle Efficiency Comparison

Gas Processing System Auxiliary Power:

The CO_2 capture case requires CO_2 compression, purification and liquefaction within the Gas Processing Systems (GPS) in order to meet the product gas specification. The GPS power requirements were calculated to be about 145 kWh/tonne (160 kWh/ton) of CO_2 captured for this case.

Total Plant Auxiliary Power:

There are three main categories that comprise the total plant auxiliary power. These are:

1. The Gas Processing System
2. The Air Separation Unit (ASU)
3. The traditional power plant auxiliaries associated with the draft system, cooling water system, material handling, etc.

Figure 4.27 compares total plant auxiliary power for the two cases.

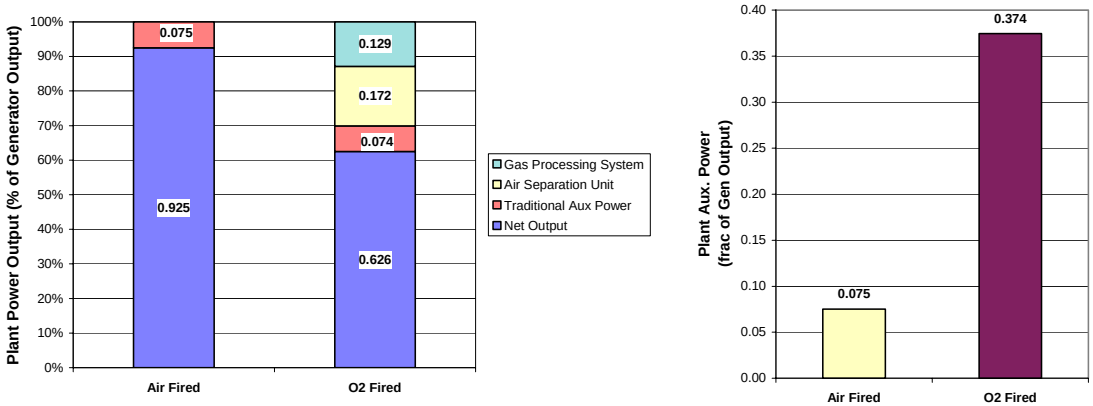

Figure 4.27: Auxiliary Power Comparison between Air-Fired and Oxygen Fired CFB Plants

Case-1, the air-fired Base Case without CO_2 recovery, requires much less auxiliary power than Case-2, since it does not require an ASU for supply of oxidant or a Gas Processing

System to compress and purify the CO_2. The auxiliary power for Case-1 is only that which is attributable to the traditional power plant equipment. This includes equipment for solids handling (coal, limestone, and ash), air and gas handling, water pumping for the steam cycle and cooling water systems, as well as other miscellaneous systems within the traditional power plant. This case requires slightly less than 8 percent of the generator output for auxiliary power. A detailed listing of plant auxiliary power is shown in Table 4.22.

Case-2 includes the ASU and GPS which consume about 17.2 and 12.9 percent of the gross output, respectively, while the traditional auxiliary power consumption is reduced slightly to about 7.4 percent of the generator output (see Table 4.22).

The auxiliary power consumption for the draft system (fans & blowers) is reduced by about 22 percent with O_2 firing which is partially due to handling a higher molecular weight gas. Some of this reduction results from introducing the oxygen from the ASU downstream of the PA and SA fans and some results from the reduction in inlet gas temperature for the ID fan. Partially offsetting these draft system power reductions is the slightly higher inlet temperatures to the PA, SA, and fluidizing air blowers with O_2 firing.

The traditional auxiliary power reduction for the draft system is partially offset by increases in the power requirements for the cooling water pumps, cooling tower fans, FDA system, and miscellaneous (controls, lighting, HVAC, etc.).

Net Plant Power Output:

Figure 4.28 compares the resulting net power output (MWe) for the cases. The net power output for Case-2 is reduced by about 28.3 MWe as compared to Case-1. The new output is about 69 percent of the air fired base case net output. The output reduction is primarily a result of additional power requirements for the ASU and GPS systems.

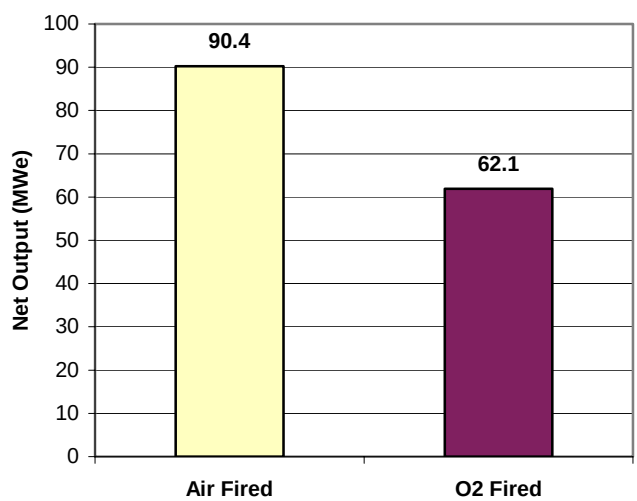

Figure 4.28: Net Plant Output Comparison

Plant Thermal Efficiency:

Figure 4.29 shows a comparison of Net Plant Thermal Efficiency between Case-1 and

Case-2. These efficiency results reflect the combined impact of boiler efficiency, steam cycle efficiency, and plant auxiliary power on net plant thermal efficiency. As shown previously, the differences in plant auxiliary power represents the dominant factor for differences in overall net plant thermal efficiency for the cases studied.

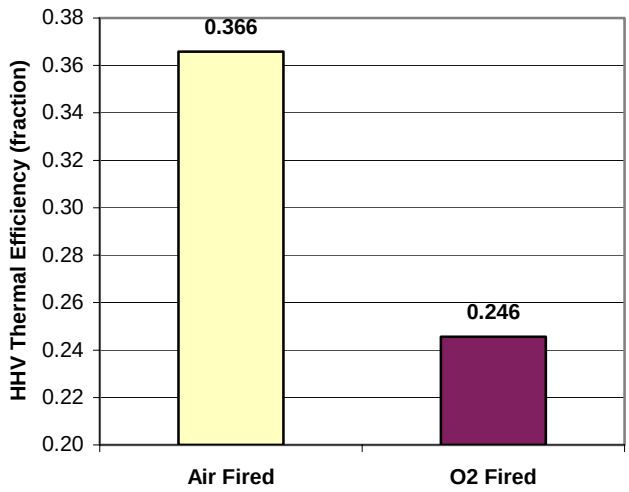

Figure 4.29: Net Plant Thermal Efficiency Comparison

The resulting energy penalty for Case-2 is about 32.7 percent as compared to Case-1. There are two primary reasons for the energy penalty associated with Case-2. First, the integration into the power plant of the Air Separation Unit (ASU) to provide combustion oxygen, and second, the Gas Processing System (GPS) to compress, purify, and liquefy the CO_2 product. Both these systems (ASU and GPS) consume large quantities of auxiliary power as shown in Table 4.22. The oxygen-fired case utilizes a cryogenic based ASU system, which adds a significant load to the plant auxiliary power requirement. About 211 kWh/tonne (233 kWh/ton) of oxygen supplied or about 17.2 percent of the steam turbine generator output is attributable to the ASU. The GPS power requirements were calculated to be about 145 kWh/tonne (160 kWh/ton) of CO_2 captured or about 12.9 percent of the steam turbine generator output.

Plant CO_2 Emissions:

Figure 4.30 compares the CO_2 produced and emitted for each case. The Base Case air fired CFB produces - and emits - 1.94 lb/kWh (0.88 kg/kWh) of CO_2. The O_2 fired plant in Case-2 produces 2.77 lb/kWh (1.26 kg/kWh). Case-2 actually produces slightly less CO_2 per hour than Case-1, due to not adding limestone. Because of the lower net power output, however, Case-2 produces more CO_2 per kWh.

The gas processing system in Case-2 recovers 2.60 lb/kWh (1.18 kg/kWh) of CO_2 - a 94% reduction. The emissions are 0.17 lb/kWh (0.08 kg/kWh).

With respect to air firing, Case-2 reduces the CO_2 emissions by 1.77 lb/kWh (0.80 kg/kWh). On this basis, the CO_2 emissions are reduced by 91%.

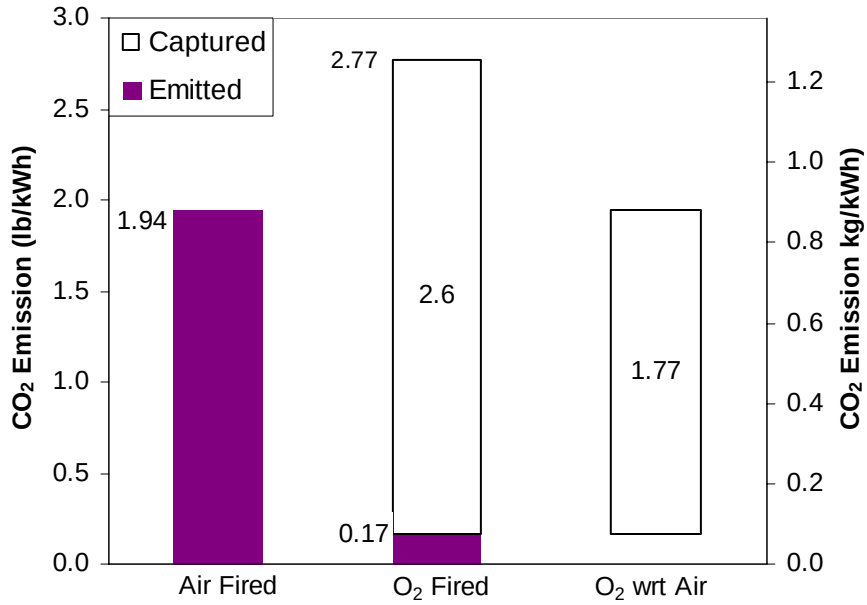

Figure 4.30: Plant CO_2 Emissions per kWh

4.5 Retrofit Cost Analysis

The plant investment cost basis and operating and maintenance cost basis are defined in this section as well as the actual cost estimates for the case studies. The investment costs for the retrofit case (Case-2) are shown as incremental costs, which are required to accommodate this retrofit. The incremental investment cost estimate summary is shown in this section for the power plant retrofitted with O_2 firing and CO_2 capture (Case-2). Case-1 is an existing CFB based steam power plant without CO_2 capture and since the economic analysis described later (see Section 4.6) is developed on an incremental cost of electricity (COE) basis, plant investment costs are not required or shown for Case-1. The retrofit investment cost estimate does not include owner's costs. Owner's costs are, however, included in the economic analysis in Section 4.6. Annual operating and maintenance cost estimates for the entire power plant are also presented in this section for both cases.

All costs shown are expressed in July 2005 dollars. The level of accuracy for the investment costs for this conceptual level design is expected to be about ± 30 percent. The retrofit plant equipment is constructed on the existing plant site in the Gulf Coast region of southeastern Texas.

4.5.1 Cost Estimation Basis:

The plant investment cost basis and O&M cost basis are defined in this section. The cost basis used in this study is similar to what was used in two previous studies (Marion, et al., 2003 and Nsakala, Liljedahl, and Turek, 2004) and is summarized below.

Investment Cost Estimation Basis:

The plant investment cost for retrofit includes engineering, procurement, and construction (i.e., EPC basis). The cost includes all new equipment and modifications to existing

equipment. The plant scope includes all required equipment including the traditional Boiler Island equipment, and Balance of Plant equipment (steam turbine, generator, condensate and feedwater systems, draft system, particulate removal, desulfurization, material handling (coal, sorbent, and ash), cooling system, electrical, instrumentation and control, and misc.). Additionally, for the CO_2 removal Case (Case-2) the non-traditional equipment is included. This encompasses new equipment for CO_2 capture, compression and liquefaction system, the new Air Separation Unit equipment, and the modified boiler equipment.

The boundary limit for the plant includes the complete plant facility within the "fence line." It includes the coal receiving and water supply systems and terminates at the high-voltage side of the main power transformers. Also, for the case with CO_2 capture, the boundary terminates at the outlet flange of the CO_2 product pipe (It does not include the CO_2 pipeline offsite or the CO_2 injection well).

The costs include equipment, materials, labor, indirect construction costs, and engineering. The labor cost to install the equipment and materials was estimated on the basis of labor man-hours. The labor costing approach was a multiple contract labor basis with the labor cost including direct and indirect labor cost plus fringe benefits and allocations for contractor expenses and markup.

These costs include professional services and "other costs." Professional services consist of the cost for engineering, construction management, and startup assistance. The engineering services include all preliminary and detailed engineering and design for the total retrofit scope. It includes specifying equipment for purchase, procurement, performing project scheduling and cost control services for the project; providing engineering and design liaison during the construction period; and providing startup support. Construction management services cost includes a field management staff capable of performing all field contract administration; field inspection and quality assurance; project construction control; safety and medical services as required; field and construction insurance administration, field office clerical and administrative support. The "other costs" category includes a cost allowance for freight costs, heavy haul, insurance, taxes, and indirect startup spares.

The retrofit capital cost estimate for the plant was calculated based on a combination of vendor-furnished quotes, and cost estimating database values. The Boiler Island retrofit costs were estimated based on calculated material weights for all components. Conceptual equipment arrangement drawings and equipment lists were developed as a part of the conceptual design of the required retrofit equipment.

The following assumptions were made in developing the EPC cost estimate for the concept evaluated:

- Investment costs are expressed in July 2005 US dollars
- Construction labor rates are based on Gulf Coast non-union rates
- The plant retrofit is constructed on an existing site in southeastern Texas
- All costs are based on mature level (n^{th} plant) commercial retrofit design
- Owners costs (including interest during construction, start-up fuel, land, land

rights, plant licensing, permits, etc.) are not included in the investment costs but are included in the Cost of Electricity analysis (see Section 4.6)

- Ash is to be shipped off site with provisions for short-term storage only
- Outdoor installation for Gas Processing System (GPS) and Air Separation Unit (ASU)
- Investment in new utility systems is outside the scope
- No special limitations for transportation of large equipment
- No protection against unusual airborne contaminants (dust, salt, etc.)
- No unusual wind storms
- No earthquakes
- No piling required
- All releases can go to atmosphere – no flare provided
- CO_2 Pump designed to API standards, all other pumps conform to ANSI
- All GPS heat exchangers designed to TEMA "C"
- All GPS vessels are designed to ASME Section VIII, Div 1.
- The retrofit investment cost estimate was developed as a factored estimate based on a combination of vendor quotes and in-house data for the major equipment. Such an estimate can be expected to have accuracy of ±30 percent.
- No purchases of utilities or charges for shutdown time have been charged against the project.

Other exclusions from the EPC retrofit investment cost estimate are as follows:

- CO_2 pipeline offsite
- CO_2 injection well
- Fuels required for startup
- Relocation or removal of buildings, utilities, and highways
- Permits
- Land and land rights
- Soil investigation
- Environmental Permits
- Disposal of hazardous or toxic waste
- Disposal of existing materials
- Custom's and Import duties
- Sales/Use tax.

- Forward Escalation
- Capital spare parts
- Chemical loading facilities
- GPS Buildings except for Compressor building and electrical substation.
- Financing cost
- Owners costs
- Guards during construction
- Site Medical and Ambulance service
- Cost & Fees of Authorities
- Overhead High voltage feed lines
- Cost to run a natural gas pipeline to the plant

Operating and Maintenance Cost Estimation Basis:

Operating and maintenance (O&M) costs were calculated for all systems for both cases (Case-1 and Case-2). O&M costs calculated are listed as either fixed or variable. The fixed operating and maintenance (FOM) are those costs, which are incurred irrespective of the number of hours of plant operation whereas the variable operating and maintenance (VOM) costs are directly proportional to the operating hours. These costs are calculated separately for the traditional power plant equipment, the oxygen supply system (ASU), and the Gas Processing System (GPS) where applicable. The FOM costs for the new equipment includes operating labor only. The VOM costs for the new equipment (used in Case-2) included such categories as chemicals and desiccants, waste handling, maintenance material and labor, supplemental fuel usage, and contracted services.

The O&M costs for the ASU were calculated by ALSTOM with consultation from Praxair by prorating values from those shown in a previous study (Nsakala, Liljedahl, and Turek, 2004). ABB Lummus Global Inc. (Lummus) calculated the O&M costs for the GPS.

The O&M costs for the traditional power plant equipment was developed quantitatively by ALSTOM using procedures similar to those used in a previous study (Nsakala, Liljedahl, and Turek, 2004). Operating labor cost for all equipment was calculated based on the number of operator jobs (O.J.) required. The average labor rate used to determine the annual cost was 32.80 $/hr, with a labor burden of 30 percent. The labor administration and overhead cost was assessed at a rate of 25 percent of the O&M labor. Maintenance cost was evaluated as a percentage of the initial capital cost.

Consumable costs including fuel, limestone, water, and chemicals were determined on the basis of individual flow rates as listed in the material and energy balances, individual unit costs and the plant annual operating hours. Waste disposal cost was also based on flow rates from the material and energy balances, unit costs, and operating hours.

- Annual operating time is 7008 hr - an 80% capacity factor.
- Coal cost: 1.19 $/GJ (1.25 $/MMBtu)
- Natural Gas cost: 3.79 $/GJ (4.00 $/MMBtu)
- Limestone cost: 11.02 $/tonne (10.00 $/ton)
- Lime cost: 55.12 $/tonne (50.00 $/ton)
- Water cost: 0.26 $/1,000 liters (1.00 $/1,000 gallons)
- Water Treatment Chemicals cost: 0.35$/kg (0.16 $/lbm)
- Ash Disposal cost: 8.82 $/tonne (8.00 $/ton)

The CO_2 captured in Case-2 is cleaned and used for enhanced oil recovery. A by-product credit of $16.53/tonne ($15/ton) was taken for the CO_2.

4.5.2 Plant Investment Cost and Operating and Maintenance Cost Summary:

A summary of plant costs (Capital and O&M) for the retrofit case is shown in Table 4.23. Capital costs are not shown for Case-1 (existing plant) because this is a retrofit study and any capital costs assigned to the existing plant would also need to be assigned to the retrofit plant. The capital costs shown for Case-2 therefore are the incremental investment costs that are required to retrofit the Case-1 existing plant to O_2 firing and CO_2 capture. A breakdown of the costs for each case is shown later in this section.

Table 4.23: Plant Investment Costs (EPC basis) and O&M Costs Summary

Study Case	EPC Capital Cost		Operating & Maintenance Costs				
			Fixed		Variable @ 80% CF		Total
	k$	$/kW	$	$/kW	$	$/kWh	$
Case-1: Base Case - Air Fired CFB w/o CO_2 Capture	---	---	3,529,377	39.03	2,763,317	0.00436	6,292,695
Case-2: Case-1 CFB Retrofit with O_2 Firing and CO_2 Capture	96,024,000	1,545	5,330,083	85.77	6,114,714	0.01404	11,444,797

Note: $/kW and $/kWh for Case-2 refer to the net kW output after retrofit

Overall plant retrofit costs and the associated specific plant retrofit costs ($/kW) can vary quite significantly for any given plant retrofit technology depending on several factors. Some of the more important factors are listed below.

- Plant Size
- Plant Location and Site Conditions
- Construction Labor Basis
- Coal Analysis
- Ambient Conditions

For the retrofit case in this study, the design coal analysis, design ambient conditions, plant location and site conditions are described in Section 4.2. The construction labor

basis used is Gulf Coast non-union. The sensitivity of plant specific retrofit cost to construction labor basis is indicated by observing that changing from Gulf Coast non-union to Ohio River Valley union basis, for example, would increase the EPC plant retrofit costs by about 20 percent (Bozzuto et. al., 2001).

4.5.3 Case-1: Plant Costs

This section discusses plant investment costs and operating and maintenance costs for the existing Case-1 plant.

Case-1 Investment Costs:

Case-1 is an existing CFB based steam power plant without CO_2 capture and since the economic analysis (see Section 4.6) is developed on an incremental cost of electricity (COE) basis, plant investment costs are not required or shown for Case-1.

Case-1 Operating and Maintenance Costs:

The operating and maintenance costs and expenses for Case-1 were developed on a first-year basis with a July 2005 plant in-service date. The costs consist of plant operating labor, maintenance (material and labor), allowances for administrative and support labor, consumables, and solid waste disposal. The costs were determined on a first-year basis that includes evaluation at an equivalent plant operating capacity factor of 80 percent (7,008 hrs/yr). The results are summarized in Table 4.24.

Table 4.24: Case-1: Total Plant Operating and Maintenance Costs

Client: ALSTOM Power Inc.
Project: COMMERCIALIZATION DEVELOPMENT OF OXYGEN FIRED CFB FOR GREENHOUSE GAS CONTROL

INITIAL & ANNUAL O&M EXPENSES

Cost Base: Jul-05

Case 1 - 90 MWe Air-Fired CFB w/o CO2 Capture

Net Plant Heat Rate (Btu/kWh): 9,328

Net Power Output (kW): 90,427

Capacity Factor (%): 80

OPERATING & MAINTENANCE LABOR

Operating Labor		
Operating Labor Rate (Base):	32.80	$/hour
Operating Labor Burden:	30.00	%
Labor O-H change Rate:	25.00	%

Operating Labor Requirements (O.J.) per shift	1 unit/mod.	Total Plant
Skilled Operator	1.0	1.0
Operator	3.0	3.0
Foreman	1.0	1.0
Lab Tech's, etc.	1.0	1.0
TOTAL O.J.'s	6.0	6.0

	Annual Cost $ / year	Annual Unit Cost $/kW-net
Annual Operating Labor Costs (calc'd)	2,241,158	24.78
Maintenance Labor Costs (calc'd)	582,344	6.44
Administrative & Support Labor (calc'd)	705,875	7.81
TOTAL FIXED OPERATING COSTS	***3,529,377***	***39.03***

		$/kWh-net
Maintenance Material Cost (calc'd)	698,812	0.00110

Consumables	Consumption Initial	Consumption Per Day	Unit Cost	Initial Cost	Annual Cost	Annual Unit Cost
Water (1000 gallons)		1,342	1.00		391,755	0.00062
Chemicals						
MU & WT Chem. (lbs.)	194,863	6,495	0.16	31,178	303,468	0.00048
Limestone (ton)	4,888	163.5	10.00	48,882	477,455	0.00075
Formic Acid (lbs.)			0.60			
Ammonia, NH3 (ton)			220			
Subtotal Chemicals				80,060	780,923	0.0012
Other Consumables						
Supplemental Fuel (MBtu)						
SCR Catalyst Replacement (MBtu)						
Emissions Penalties						
Subtotal Other						
Waste Disposal						
FDA Waste & Bottom Ash (ton)		381.8	8.00		891,827	0.0014
Subtotal Solid Waste Disposal					891,827	0.0014
By-Products & Emissions						
Gypsum (ton)						
Subtotal By-Products						
TOTAL VARIABLE OPERATING COST					***2,763,317***	***0.0044***

4.5.4 Case-2: Plant Costs

This section discusses plant retrofit investment costs and operating and maintenance costs for the Case-2 plant. The Case-2 plant is a retrofit of the existing Base Case plant (Case-1) to include O_2 firing and CO_2 capture.

Case-2 Investment Cost Summary:

The retrofit of the plant to O_2 firing and CO_2 capture was developed consistent with the approach and basis identified in the design basis (Section 4.2). The capital cost estimate is expressed in July 2005 dollars. The plant retrofit investment cost summary is shown in Table 4.25 as total dollars, dollars per new kW-net, and dollars per original kW-net. The new output is reduced to about 69 percent of the original net output due primarily to the additional power consumption required for the ASU and GPS.

Table 4.25: Case-2 Plant Retrofit Investment Cost Summary

Category	Retrofit Investment Costs		
	$	$/kW-new	$/kW-original
Boiler Modifications (Seal leaks, GR system, ID fan, Controls)	4,500,000	72	50
FDA System & Baghouse Modifications	5,850,000	94	65
Gas Processing System	48,174,000	775	533
Air Separation Unit	37,500,000	603	415
Total	**96,024,000**	**1,545**	**1,062**

Case-2 Operating and Maintenance Cost Summary:

The operating and maintenance costs and expenses were developed on a first-year basis with a July 2005 plant in-service date. The operating and maintenance costs are expressed in July 2005 dollars. The operating and maintenance costs consist of plant operating labor, maintenance (material and labor), allowances for administrative and support labor, consumables, and solid waste disposal. The costs were determined on a first-year basis that includes evaluation at an equivalent plant operating capacity factor of 80 percent (7,008 hrs/yr). The total plant operating and maintenance costs results for Case-2 are summarized in Table 4.26.

Table 4.26: Case-2: Total Plant Operating and Maintenance Cost Summary

ANNUAL O&M EXPENSES SUMMARY			
Client: ALSTOM Power Inc.		Cost Base:	Jul-05
Project: COMMERCIALIZATION DEVELOPMENT OF OXYGEN FIRED CFB FOR GREENHOUSE GAS CONTROL	**Case-2 Retrofit**	~100 MWe-gross, O2-Fired CFB w/ASU & CO2 Capture	
		Net Plant Heat Rate (Btu/kWh):	13,861
		Net Power Output (kW):	62,144
		Capacity Factor (%):	80
BOILER ISLAND AND BALANCE OF PLANT O&M COSTS			
		Annual Cost, $	$/kW
TOTAL FIXED O&M COSTS		3,529,377	56.79
		Annual Cost, $	$/kWhr
TOTAL VARIABLE O&M COSTS		3,301,650	0.0076
AIR SEPARATION UNIT (ASU)			
		Annual Cost, $	$/kW
TOTAL FIXED O&M COSTS		1,494,106	24.04
		Annual Cost, $	$/kWhr
TOTAL VARIABLE O&M COSTS		170,476	0.000391
GAS PROCESSING SYSTEM (GPS)			
		Annual Cost, $	$/kW
TOTAL FIXED O&M COSTS		306,600	4.93
		Annual Cost, $	$/kWhr
TOTAL VARIABLE OPERATING COST		2,642,587	0.0061
TOTAL PLANT O&M COSTS			
		Annual Cost, $	**$/kW**
TOTAL FIXED OPERATING COSTS		**5,330,083**	**85.77**
		Annual Cost, $	**$/kWhr**
TOTAL VARIABLE OPERATING COST		**6,114,714**	**0.01404**

Discussion of Cost Categories:

As described above, the cost estimate for the Case-2 retrofit is further broken down into three primary categories as listed below:

- Boiler Modifications
- Gas Processing System
- Air Separation Unit

The following three sections provide investment cost and O&M cost breakdowns and discussion for the three individual categories.

Case-2 Boiler Modification Costs:
The boiler modification cost required for Case-2 is relatively minor as compared to the other new equipment required for the retrofit (i.e., ASU and GPS). For this project the

boiler scope is defined as everything on the gas side upstream of the Stack (excluding the new Gas Cooler which is part of the Gas Processing System). Therefore the boiler scope includes all boiler equipment such as fans, ductwork, baghouse, air heater, steam generator, coal feed system, and ash removal system, etc. Boiler Island scope modifications for Case-2 include such items as sealing the boiler for air leaks, new ductwork and dampers for the flue gas recirculation system, modification to the baghouse to accommodate the new Flash Dryer Absorber (FDA) SO_2 removal system, a new ID fan and motor to accommodate the higher draft loss associated with the new FDA system, and modified controls and instrumentation.

The total EPC cost required for the Boiler Island scope modifications of Case-2 is about **$10,350,000** or on a normalized basis ($114/kWe$_{original}$ or $167/kWe$_{new}$). The cost to modify just the boiler is estimated to be about $4,500,000 or on a normalized basis ($50/kWe$_{original}$ or $72/kWe$_{new}$). The cost for the new FDA system, which is included in the above Boiler Island cost, is $5,850,000 or on a normalized basis ($65/kWe$_{original}$ or $94/kWe$_{new}$). This cost (EPC basis) includes all the new FDA equipment and the required modifications to the existing baghouse and ductwork.

These cost estimates include all material, engineering and construction. The expected level of accuracy for this budget level cost estimate is +/- 30 percent.

The total annual operating and maintenance costs for the modified Case-2 Boiler and Balance of Plant (BOP) equipment are shown below in Table 4.27.

Table 4.27: Case-2: Modified Boiler & BOP Annual Operating and Maintenance Costs

Client: ALSTOM Power Inc.
Project:COMMERCIALIZATION DEVELOPMENT OF OXYGEN FIRED CFB FOR GREENHOUSE GAS CONTROL

INITIAL & ANNUAL O&M EXPENSES

Cost Base: Jul-05

Case-2 Retrofit ~100 MWe-gross, O2-Fired CFB w/ASU & CO2 Capture

Net Plant Heat Rate (Btu/kWh): 13,861

Net Power Output (kW): 62,144

Capacity Factor (%): 80

BOILER ISLAND AND BALANCE OF PLANT O&M COSTS

OPERATING & MAINTENANCE LABOR

Operating Labor

Operating Labor Rate (Base):	32.80	$/hour
Operating Labor Burden:	30.00	%
Labor O-H change Rate:	25.00	%

Operating Labor Requirements (O.J.) per shift	1 unit/mod.	Total Plant
Skilled Operator	1.0	1.0
Operator	3.0	3.0
Foreman	1.0	1.0
Lab Tech's, etc.	1.0	1.0
TOTAL O.J.'s	6.0	6.0

	Annual Cost $ / year	Annual Unit Cost $/kW-net
Annual Operating Labor Costs (calc'd)	2,241,158	36.06
Maintenance Labor Costs (calc'd)	582,344	9.37
Administrative & Support Labor (calc'd)	705,875	11.36
TOTAL FIXED OPERATING COSTS	**3,529,377**	**56.79**

	$ / year	$/kWhr
Maintenance Material Cost (calc'd)	698,812	0.00160

Consumables	Consumption Initial	Consumption Per Day	Unit Cost	Initial Cost	$ / year	$/kWhr
Water (1000 gallons)		1,944	1.00		567,524	0.00130
Chemicals						
MU & WT Chem. (lbs.)	194,863	9,410	0.16	86,146	439,625	0.00101
Lime (ton)	5,690	54.59	50.00	101,556	796,947	0.00183
Formic Acid (lbs.)			0.60			
Ammonia, NH3 (ton)			220			
Subtotal Chemicals				187,702	1,236,573	0.0028
Other						
Supplemental Fuel (MBtu)						
SCR Catalyst Replacement (MBtu)						
Emissions Penalties						
Subtotal Other						
Waste Disposal						
FDA Waste & Bottom Ash (ton)		342	8.00		798,741	0.00183
Subtotal Solid Waste Disposal					798,741	0.0018
By-Products & Emissions						
Gypsum (ton)						
Subtotal By-Products						
TOTAL VARIABLE OPERATING COST					**3,301,650**	**0.0076**

Case-2 Gas Processing System Costs:

Table 4.28 shows investment costs for the Case-2 Gas Processing System (GPS). This system provides CO_2 compression, purification, and liquefaction to meet the CO_2 specification shown previously in Section 4.2.2. The CO_2 is provided at the plant fence line at 138 barg (2,000 psig). These costs were estimated by ABB Lummus Global Inc. and are on an EPC basis. The expected level of accuracy for this budget level cost estimate is +/- 30 percent.

Table 4.28: Case-2 Gas Processing System Investment Costs

ABB LUMMUS GLOBAL HOUSTON

Project : CO2 Plant - DEO
Job/Prop # :
Scope : EPC
Piece count: 37

Location : USA-USGC
Plant : CO2
Capacity :
Cost Based on "Cooling Water"

Project start:
Mech.compl.:

Rev. : 3a
18-Nov-05

Acc't Code	Description	Pieces	Direct Manhours	Labor ($,000)	Material ($,000)	Subcontract ($,000)	Total ($,000)	%
11000	Heaters		158	2	100		102	0.2%
11200	Exchangers & Aircoolers		3,937	61	2,493		2,554	5.3%
12000	Vessels / Filters		2,282	35	1,445		1,480	3.1%
12100	Towers / Internals		2,056	32	1,302		1,334	2.8%
12200	Reactors		-	-			-	0.0%
13000	Tanks		-	-	-		-	0.0%
14100	Pumps		992	15	628		643	1.3%
14200	Compressors		16,184	251	10,250		10,501	21.8%
18000	Special Equipment		316	5	200		205	0.4%
	Sub-Total Equipment	**37**	**25,924**	**402**	**16,418**	**-**	**16,820**	**34.9%**
21000	Civil		38,886	603	1,478		2,080	4.3%
21100	Site Preparation		-	-	-		-	0.0%
22000	Structures		9,073	141	739		879	1.8%
23000	Buildings		10,370	161	394		555	1.2%
30000	Piping		71,290	1,105	3,284		4,389	9.1%
40000	Electrical		36,725	569	1,313		1,883	3.9%
50000	Instruments		30,244	469	2,299		2,767	5.7%
61100	Insulation		19,443	301	493		794	1.6%
61200	Fireproofing		12,962	201	246		447	0.9%
61300	Painting		10,802	167	140		307	0.6%
	Sub-Total Commodities		**239,795**	**3,717**	**10,385**	**-**	**14,101**	**29.3%**
70000	**Construction Indirects**						**5,979**	**12.4%**
	Sub-Total Direct Cost		**265,719**	**4,119**	**26,803**	**-**	**36,900**	**76.6%**
71000	Constr. Management						560	1.2%
80000	Home Office Engineering						3,774	7.8%
80000	Basic Engineering						700	1.5%
95000	License fee	Excluded						0.0%
19400	Vendor Reps						670	1.4%
19300	Spare parts						1,070	2.2%
80000	Training cost	Excluded						0.0%
80000	Commissioning	Excluded						0.0%
19200	Catalyst & Chemicals						100	0.2%
97000	Freight						800	1.7%
96000	CGL / BAR Insurance							0.0%
	Sub-Total						**44,574**	**92.5%**
91400	Escalation						1,300	2.7%
93000	Contingency	Excluded						0.0%
93000	Risk	Excluded						0.0%
	Total Base Cost						**45,874**	**95.2%**
	Contracters Fee						2,300	4.8%
	Grand Total						**48,174**	**100.0%**

Exclusions : Bonds, Taxes, Import duties, Hazardous material handling & disposal, Capital spare parts, Reactor Catalyst, Chemicals , Commissioning and Initial operations, Buildings other than Control room & MCC.

The annual operating and maintenance costs, also estimated by ABB Lummus Global Inc., for the GPS are shown below in Table 4.29.

Table 4.29: Case-2 Gas Processing System Annual Operating and Maintenance Costs

Operating Costs ($/yr)	Variable Costs	Fixed Costs
Chemical and Dessicant	7,437	
Waste Handling	-	
Natural Gas *	98,210	
Electricity**	-	
Operating Labor	-	306,600
Maintenance (Material & Labor)	1,706,940	
Contracted services	830,000	
Column Total	2,642,587	306,600
Grand Total (Fixed & Variable)	**2,949,187**	

* Based on $4/ MMBU and 7008 hours/ yr.
** Included in overall facility operating cost

Case-2 Air Separation Unit Costs:
The Air Separation Unit (ASU) that is required for this O_2 fired retrofit is a commercially available cryogenic type system. The unit has the capacity to provide nominally 1,635 tonne/day (1,800 ton/day) of oxygen to the Boiler Island at a purity of 99 percent and a pressure of 0.28 barg (4.0 psig). The EPC cost for this unit is estimated to be **$37,500,000** as provided by Praxair Inc. The expected level of accuracy for this budget level cost estimate is +/- 30 percent.

The annual operating costs for the ASU are shown below in Table 4.30. These O&M costs were developed based on the O&M costs from a previous study (Nsakala, Liljedahl, and Turek, 2004).

Table 4.30: Case-2 ASU Annual Operating Costs

Operating Cost ($/yr)	Variable Costs	Fixed Costs
Minor Consumables	9,038	
Cooling Water*	0	
Natural Gas***	161,439	
Prepurified Adsorbent**	0	
Operating Labor		1,494,106
Column Total	**170,476**	**1,494,106**
Grand Total (Fixed + Variable)	**1,664,582**	

* Cooling water is supplied by others; thus, major treatment chemicals are part of this supply

** Prepurified adsorbent is included in the plant and is typically not replaced

***Based on $4.0/10^6 Btu and 7008 hours/year

4.5.5 Economy of Scale Effects

It should be emphasized that because of the small size of this unit (~62 MWe-net after retrofit) some of the cost impacts listed above are strongly influenced by economy of scale effects. The retrofit costs shown above and the resulting economic impacts shown in Section 4.6 are significantly greater than would be expected with more typically sized CFB or PC power plants. The selection of a small CFB for this study was however done purposely. This was done in order to investigate a unit size that would be relatively close to the size that will be chosen for ALSTOM's large-scale O_2 fired technology demonstration.

To illustrate the economy of scale, we can focus on the gas processing system (GPS) costs. Table 4.31 shows cost results for five gas processing systems of similar design but with a wide range of capacities. Capacities for these plants range from a low of about 1,750 tonne CO_2 / day (1,900 tons CO_2 / day) (used in this study) up to a high of almost 11,000 tonne CO_2 / day (12,000 tons CO_2 / day) - over a 6:1 capacity range. The EPC costs were all escalated to July 2005 US$ and plotted as a function of capacity in Figure 4.31.

Table 4.31: Comparison of Gas Processing System Costs

Study Description		Present Study	GHG Phase-I	OCDO	Transalta	IEA
Reference		This Study	Marion, et al., 2003	Bozzuto, et al., 2001 (1)	Palkes, et al., 1999	IEA, Report 2005/9
Cost Date		Jul-05	Jul-02	Jun-01	Jun-99	Jul-05
	Units					
Plant Net Output	MWe	62.4	134.5	273.3	197.5	532
CO_2 Production	Tons/day	1938	4229	9555	6876	11690
	Tonne/day	1758	3837	8668	6238	10605
EPC Cost	MM-$	48.2	57.1	97.58	51.6	102
Escalation	Years	0.0	3.0	4.1	6.1	0.0
EPC Cost (7/05 USD)	MM-$	48.2	69.3	125.3	73.0	102.0
Specific Cost	$/kWe	772	515	458	370	192
	$/Ton/Day	24,858	16,379	13,110	10,624	8,725
	$/Tonne/day	27,401	18,054	14,451	11,711	9,618

(1) Note: Specific Costs reduced for this case to account for GPS location 1/4th mile from boiler and other extra items

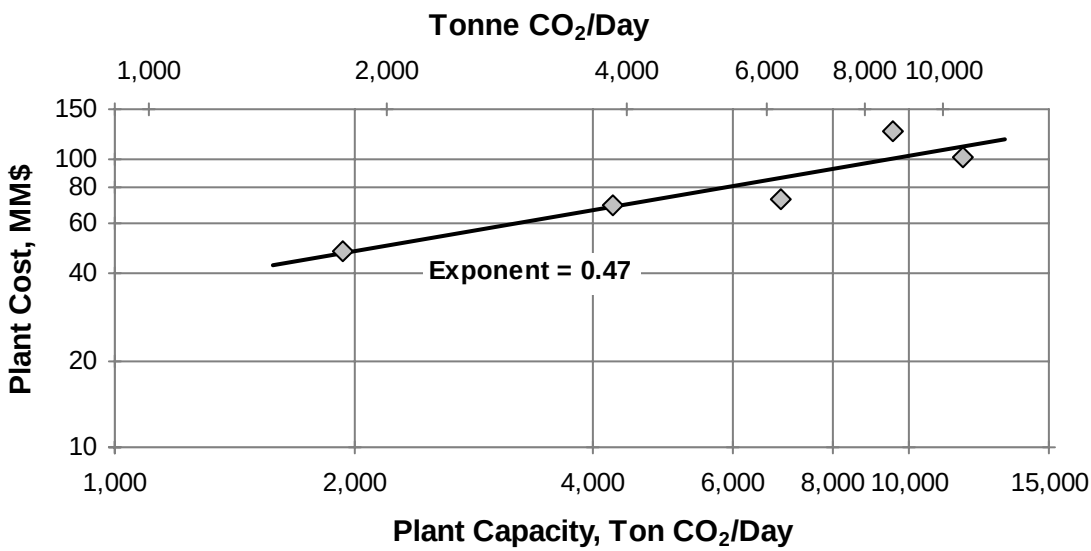

Figure 4.31: Gas Processing System Specific Cost Comparison

As shown above, the specific costs show a fairly wide range from about 10,000 to 27,000 $/(tonne/day) of CO_2 (9,000 to 25,000 $/(ton/day) of CO_2). Although this is a wide range, when the total costs are plotted as a function of plant capacity a fairly good curve fit is obtained using a scaling exponent of 0.47. This exponent value indicates a strong economy of scale impact for capacity changes.

For perspective with other boiler island costs, Table 4.31 also shows the GPS costs as $/kWe. These range from 775 $/kWe for the small plant in the present study down to 192 $/kWe for a large supercritical unit in the IEA study.

This economy of scale effect is also quite evident with operating and maintenance costs where staffing levels and other O&M cost items are typically not linearly related to plant capacity. Other plant retrofit costs (i.e., ASU and boiler modifications) also exhibit this same type of an effect.

4.6 Economic Analysis

This section shows the results of an economic evaluation that compares the retrofit CO_2 capture concept (Case-2) with the Base Case study unit without CO_2 capture (Case-1). The basic purpose of the economic evaluation is to quantify the economic impacts of retrofitting an existing CFB based power plant to O_2 firing and CO_2 capture. The economic evaluation results are presented as incremental Cost of Electricity (levelized basis). The incremental cost of electricity is incremental relative to the existing Base Case plant (air fired Case-1). CO_2 mitigation cost ($/tonne of CO_2 avoided) was also determined in this analysis for the CO_2 capture case (Case-2) relative to Case-1. The comparisons shown in this section quantify the economic impact of retrofitting an existing CFB based power plant to O_2 firing and CO_2 capture.

The model used to perform the economic evaluations was the proprietary ALSTOM Power Plant Laboratories' Project Economic Evaluation Pro-Forma. This cash flow model, developed by the Company's Project & Trade Finance group, has the capability to analyze the economic effects of different technologies based on differing efficiencies, investment costs, operating and maintenance costs, fuel costs, and cost of capital assumptions. Various categories of results are available from the model. In addition to cost of electricity, net present value, project internal rate of return, payback period, and other evaluation parameters are available.

4.6.1 Economic Analysis Assumptions:

Numerous financial assumptions were used in performing the economic evaluations. The primary assumptions are listed in Table 4.32. The assumptions used for the economic evaluations in this study are similar to what was used in two previous studies (Marion, et al., 2003 and Nsakala, Liljedahl, and Turek, 2004) and are summarized below. The shaded items in Table 4.32 represent parameters that were varied in the economic sensitivity study.

Incremental Cost of Electricity Calculation:
Levelized incremental cost of electricity (COE) was used as a criterion to compare the systems in this study. The levelized incremental cost of electricity result comprises five components: financial, fixed O&M, variable O&M, CO_2 product credit, and fuel. The cash flow model used is structured to calculate the corresponding annual cash flows for each of these items over the evaluation life of the project. The annual expenses are distributed over the corresponding net annual electricity generated (kWh/year) in order to determine a unit cost (cents/kWh). These costs are subsequently levelized to get a corresponding value of each component over the plant life. In other words, each of the cash flow streams is converted to annuity payments corresponding to a constant value over the life of the study.

Table 4.32: Economic Evaluation Study Assumptions

POWER GENERATION	
Net output (MW)	Case Sensitive
Capacity factor (%)	80%
Availability factor (%)	100%
Net plant heat rate, HHV basis	Case Sensitive
Degradation factor (%)	0.00%
TIME FRAME	
Construction period (months)	24
Depreciation Term (years)	30
Analysis Horizon (years)	30
PROJECT COSTS	
EPC Price ($1000s)	Case Sensitive
Fixed O&M costs ($ per kW)	Case Sensitive
Variable O&M costs (cents per kWh)	Case Sensitive
Owner's EPC Contingency	0.00%
Initial spares and consumables	1.00%
Insurance	
Insurance during Construction	1.00%
Insurance during first year of operation	0.50%
Development Costs	
Development Costs & Fees	4.00%
Reimburseable Dev't Costs	3.00%
Advisory Fees	3.00%
Financial and Legal Fees	3.00%
Start-up Fuel	0.00%
Fuel Stock Pile	0.00%
Other Costs	0.50%
Total Initial Project Costs (% of EPC)	16.00%
FUEL COST	
Coal Price ($ per MMBtu)	1.25
($ per GJ)	1.19
Natural Gas Price ($ per MMBtu)	4.00
($ per GJ)	3.79
PROJECT CREDITS	
CO_2 Sell Price ($/ton)	15.00
($ per Tonne)	14.22
N_2 Sell Price ($/ton)	0.00
($ per Tonne)	0.00
ESCALATION FACTORS	
Coal Price	0.00%
Variable O&M	0.00%
Fixed O&M (including payroll)	0.00%
Consumer Price Index	0.00%

FINANCING ASSUMPTIONS	
Equity	50.00%
Debt	50.00%
DEBT PORTFOLIO	
Interest Rates (Financed) [1]	
During Construction	
Base Rate	1.32%
Swap/Reinvestment cushion	1.28%
Fixed Rate Margin	3.00%
All-In Fixed Rate	5.60%
During Operation	
Base Rate	1.32%
Swap/Reinvestment cushion	1.28%
Fixed Rate Margin	2.50%
All-In Fixed Rate	5.10%
Up-front Fee (Financed)	2.00%
Commitment Fee	1.00%
Grace Period (months)	0
Loan Tenor (years after construction)	30
TAXES	
Corporate Tax	20.00%
Tax holiday (years after commissioning)	0.00%
Customs Duty	0.00%
Customs Clearance Fee	0.00%
COST OF CAPITAL ASSUMPTIONS	
Discount Factor	10.00%
PROGRESS PAYMENT SCHEDULES	
Month	
1	10%
6	15%
12	25%
18	25%
24	25%
Total	100%

[1] **Wall Street Journal, 4/23/03, London Interbank Offered Rate (LIBOR) Swap Curve**

The **financial** component of the COE represents the costs which are associated with payment of the engineered, procured and constructed (EPC) retrofit price, all associated owner's costs, customs and financing fees, and interest accrued both during construction and during operation. The **fixed O&M** component represents the operating and maintenance costs that occur regardless of whether the unit is in operation or not. The **variable O&M** component represents the incremental operating and maintenance costs that occur only when the unit is in operation. The **CO_2 product credit** represents revenues obtained for the sale of the CO_2 product for an EOR application as was assumed for this study. The **fuel** cost component represents the cost of the fuel, which is consumed during operation of the plant.

4.6.2 Economic Analysis Results Summary

The case studies are compared using two evaluation criteria, (1) the levelized incremental cost of electricity compared to the reference plant without CO_2 capture, and (2) the mitigated costs of avoided CO_2, also with respect to Case-1.

The incremental COE is defined as:

$$\textbf{Incremental COE} = (COE_{CP} - COE_{Ref})$$

Where:

COE ≡ levelized Cost of Electricity (cents / kWh),
$_{CP}$ ≡ Capture Plant, and
$_{Ref}$ ≡ Reference Plant.

The mitigation cost is defined as:

$$\textbf{Mitigation Cost} = (COE_{CP} - COE_{Ref}) / (CO_{2\text{-}Ref} - CO_{2\text{-}CP})$$

Where:

Mitigation Cost ≡ $/tonne or $/ton of CO_2 Avoided,
COE ≡ levelized Cost of Electricity ($ / kWh),
CO_2 ≡ Carbon dioxide emitted (tonne / kWh or ton / kWh),
$_{CP}$ ≡ Capture Plant, and
$_{Ref}$ ≡ Reference Plant.

The levelized COE is summarized in Figure 4.32. The total cost of electricity for the air-fired Case-1 is 2.16 cents/kWh, excluding a capital investment charge for the existing plant. The incremental costs for the retrofitted system with O_2 firing and CO_2 capture (Case-2) are shown as the dark bars in Figure 4.32. The incremental cost of electricity for Case-2 is about 3.12 cents/kWh. This incremental cost can be expressed as a CO_2 mitigation cost of about 38.8 $/tonne (35.3 $/ton) of CO_2 avoided, compared to Case-1.

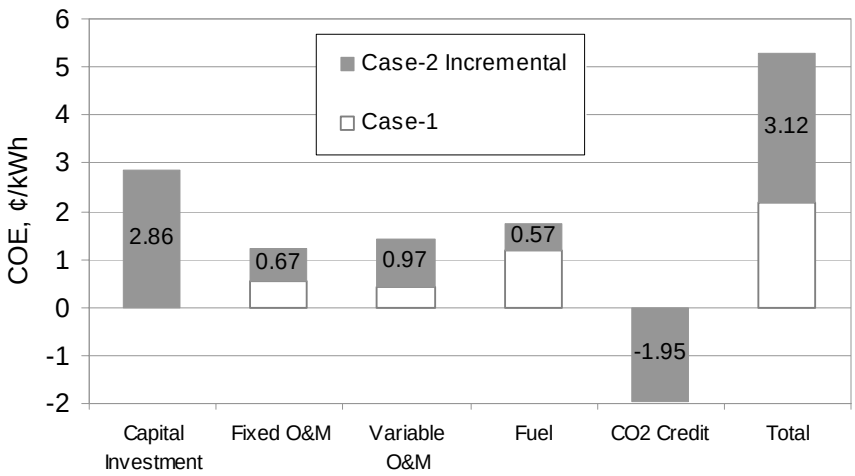

Figure 4.32: Incremental Cost of Electricity for Case-2

4.6.3 Economic Analysis Sensitivity Study Results:

An economic sensitivity analyses was also conducted for Case-2 to determine the effect on levelized COE of variations of selected base parameter values by ± 25 percent and CO_2 by-product selling price up to $27.6 per tonne ($25 per ton). These parameters are listed in Table 4.33: EPC plant price, coal price, capacity factor, equity rate, corporate tax rate, the discount rate for cost of capital, and CO_2 credit sell price.

Table 4.33: Economic Sensitivity Study Parameters and Parameter Values

Parameter	Units	Base Value	Minimum	Maximum
Investment Cost	$	as estimated	Base - 25%	Base + 25%
Coal Cost	$/MM-Btu	1.25	0.94	1.56
	$/GJ	1.19	0.89	1.49
Capacity Factor	%	80	60	100
Equity	%	50	37.50	62.50
Corporate Tax	%	20	15.00	25.00
Discount Rate	%	10	7.50	12.50
CO_2 Byproduct Sell Price	$/Ton	15	0	25
	$/Tonne	16.5	0	27.6

Results for the Case-2 COE sensitivity study are shown in Table 4.34. The largest change is from varying the credit for CO_2 product: incremental COE ranges from 1.82 to 5.06 cents/kWh; CO_2 mitigation cost ranges from 22.6 - 63.1 $/tonne (20.6 - 57.4 $/ton).

Capacity Factor and then EPC investment cost had the next largest impacts on the COE for the ranges studied.

The variations in the incremental cost of electricity are also shown as “spider plots” in Figure 4.33.

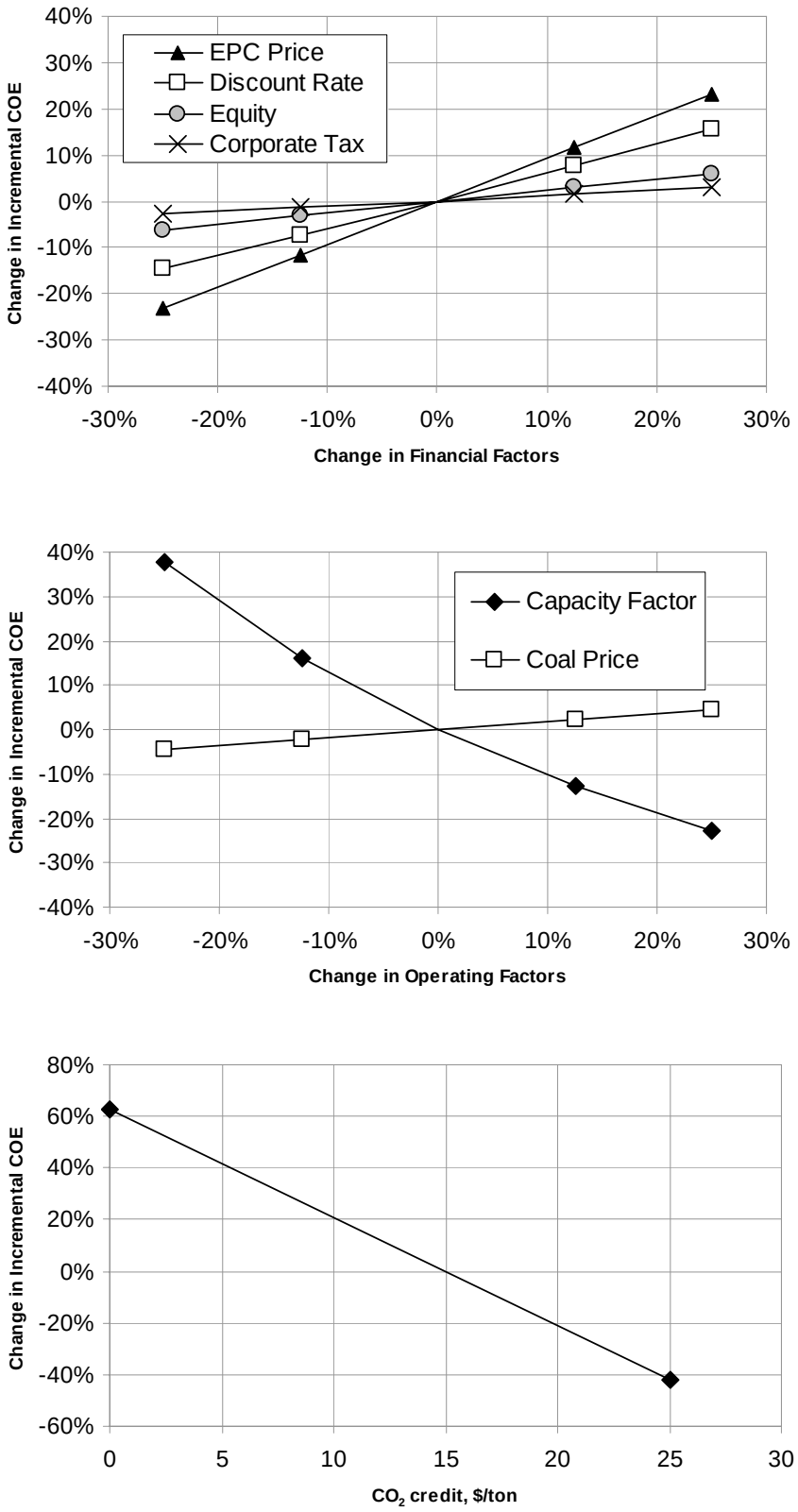

Figure 4.33: Economic Sensitivity Analysis Results for Case 2

Table 4.34: Economic Sensitivity Analysis Results for Case 2 - Oxygen-Fired CFB with ASU and CO_2 Capture

	BASE	vary capacity factor				vary EPC price				vary fuel price			
GENERATION													
Reference Year	2005	2005	2005	2005	2005	2005	2005	2005	2005	2005	2005	2005	2005
Net output (MW)	62.1	62.1	62.1	62.1	62.1	62.1	62.1	62.1	62.1	62.1	62.1	62.1	62.1
Availability factor (%)	100	100	100	100	100	100	100	100	100	100	100	100	100
Capacity factor (%)	80	60	70	90	100	80	80	80	80	80	80	80	80
Actual operating hours per year	7,008	5,256	6,132	7,884	8,760	7,008	7,008	7,008	7,008	7,008	7,008	7,008	7,008
Net efficiency, HHV (%)	24.6	24.6	24.6	24.6	24.6	24.6	24.6	24.6	24.6	24.6	24.6	24.6	24.6
Net plant heat rate, HHV (Btu/ kWh)	13,861	13,861	13,861	13,861	13,861	13,861	13,861	13,861	13,861	13,861	13,861	13,861	13,861
(kJ/ kWh)	14,620	14,620	14,620	14,620	14,620	14,620	14,620	14,620	14,620	14,620	14,620	14,620	14,620
Net generation (MWh/ yr)	435,508	326,631	381,070	489,947	544,385	435,508	435,508	435,508	435,508	435,508	435,508	435,508	435,508
COSTS *													
EPC Price ($/kW)	1,545	1,545	1,545	1,545	1,545	1,159	1,352	1,738	1,931	1,545	1,545	1,545	1,545
EPC Price ($1000s)	96,024	96,024	96,024	96,024	96,024	72,018	84,021	108,027	120,030	96,024	96,024	96,024	96,024
Construction period (months)	24	24	24	24	24	24	24	24	24	24	24	24	24
Insurance (% EPC)	1.0	1.0	1.0	1.0	1.0	1.0	1.0	1.0	1.0	1.0	1.0	1.0	1.0
Initial spares and consumables (% EPC)	1.0	1.0	1.0	1.0	1.0	1.0	1.0	1.0	1.0	1.0	1.0	1.0	1.0
Infrastructure costs						included in EPC							
Fixed O&M costs ($1000/ yr)	5,330	5,330	5,330	5,330	5,330	5,330	5,330	5,330	5,330	5,330	5,330	5,330	5,330
Fixed O&M costs ($/ kW)	85.77	85.77	85.77	85.77	85.77	85.77	85.77	85.77	85.77	85.77	85.77	85.77	85.77
Variable O&M costs ($1000/ yr)	2,374	1,781	2,078	2,671	2,968	2,374	2,374	2,374	2,374	2,374	2,374	2,374	2,374
Variable O&M costs (¢/kWh)	1.40	1.40	1.40	1.40	1.40	1.40	1.40	1.40	1.40	1.40	1.40	1.40	1.40
Total O&M costs (¢/ kWh)	2.63	3.04	2.80	2.49	2.38	2.63	2.63	2.63	2.63	2.63	2.63	2.63	2.63
CO_2 Credit (¢/kWh)	1.95	1.95	1.95	1.95	1.95	1.95	1.95	1.95	1.95	1.95	1.95	1.95	1.95
FUEL COST													
Coal Price ($/MMBtu)	1.25	1.25	1.25	1.25	1.25	1.25	1.25	1.25	1.25	0.94	1.09	1.41	1.56
($/kJ)	1.19	1.19	1.19	1.19	1.19	1.19	1.19	1.19	1.19	0.89	1.04	1.33	1.48
FINANCING ASSUMPTIONS													
Equity (%)	50.0	50.0	50.0	50.0	50.0	50.0	50.0	50.0	50.0	50.0	50.0	50.0	50.0
Corporate Tax (%)	20.0	20.0	20.0	20.0	20.0	20.0	20.0	20.0	20.0	20.0	20.0	20.0	20.0
Discount Factor (%)	10.0	10.0	10.0	10.0	10.0	10.0	10.0	10.0	10.0	10.0	10.0	10.0	10.0
Incremental Levelized COE (¢/kWh) **													
Financial Component	2.86	3.82	3.27	2.55	2.29	2.15	2.51	3.22	3.58	2.86	2.86	2.86	2.86
Fixed O&M	0.67	0.89	0.76	0.59	0.53	0.67	0.67	0.67	0.67	0.67	0.67	0.67	0.67
Variable O&M	0.97	0.97	0.97	0.97	0.97	0.97	0.97	0.97	0.97	0.97	0.97	0.97	0.97
CO2 Credit	-1.95	-1.95	-1.95	-1.95	-1.95	-1.95	-1.95	-1.95	-1.95	-1.95	-1.95	-1.95	-1.95
Fuel	0.57	0.57	0.57	0.57	0.57	0.57	0.57	0.57	0.57	0.42	0.50	0.64	0.71
Total	3.12	4.29	3.62	2.72	2.41	2.40	2.76	3.47	3.83	2.97	3.04	3.19	3.26
CO_2 Mitigation Cost ($ / ton)	35.3	48.6	41.0	30.9	27.3	27.2	31.2	39.4	43.4	33.7	34.5	36.1	36.9
($/tonne)	38.8	53.5	45.1	33.9	30.0	29.9	34.4	43.3	47.8	37.1	38.0	39.7	40.6

Table 4.34: Economic Sensitivity Analysis Results for Case 2 - Oxygen-Fired CFB with ASU and CO2 Capture (Continued)

	BASE	vary equity charge				vary corporate tax rate				vary discount factor				vary CO_2 credit ***	
GENERATION															
Reference Year	2005	2005	2005	2005	2005	2005	2005	2005	2005	2005	2005	2005	2005	2005	2005
Net output (MW)	62.1	62.1	62.1	62.1	62.1	62.1	62.1	62.1	62.1	62.1	62.1	62.1	62.1	62.1	62.1
Availability factor (%)	100	100	100	100	100	100	100	100	100	100	100	100	100	100	100
Capacity factor (%)	80	80	80	80	80	80	80	80	80	80	80	80	80	80	80
Actual operating hours per year	7,008	7,008	7,008	7,008	7,008	7,008	7,008	7,008	7,008	7,008	7,008	7,008	7,008	7,008	7,008
Net efficiency, HHV (%)	24.6	24.6	24.6	24.6	24.6	24.6	24.6	24.6	24.6	24.6	24.6	24.6	24.6	24.6	24.6
Net plant heat rate, HHV (Btu/ kWh)	13,861	13,861	13,861	13,861	13,861	13,861	13,861	13,861	13,861	13,861	13,861	13,861	13,861	13,861	13,861
(kJ/ kWh)	14,620	14,620	14,620	14,620	14,620	14,620	14,620	14,620	14,620	14,620	14,620	14,620	14,620	14,620	14,620
Net generation (MWh/ yr)	435,508	435,508	435,508	435,508	435,508	435,508	435,508	435,508	435,508	435,508	435,508	435,508	435,508	435,508	435,508
COSTS *															
EPC Price ($/kW)	1,545	1,545	1,545	1,545	1,545	1,545	1,545	1,545	1,545	1,545	1,545	1,545	1,545	1,545	1,545
EPC Price ($1000s)	96,024	96,024	96,024	96,024	96,024	96,024	96,024	96,024	96,024	96,024	96,024	96,024	96,024	96,024	96,024
Construction period (months)	24	24	24	24	24	24	24	24	24	24	24	24	24	24	24
Insurance (% EPC)	1.0	1.0	1.0	1.0	1.0	1.0	1.0	1.0	1.0	1.0	1.0	1.0	1.0	1.0	1.0
Initial spares and consumables (% EPC)	1.0	1.0	1.0	1.0	1.0	1.0	1.0	1.0	1.0	1.0	1.0	1.0	1.0	1.0	1.0
Infrastructure costs								included in EPC							
Fixed O&M costs ($1000/ yr)	5,330	5,330	5,330	5,330	5,330	5,330	5,330	5,330	5,330	5,330	5,330	5,330	5,330	5,330	5,330
Fixed O&M costs ($/ kW)	85.77	85.77	85.77	85.77	85.77	85.77	85.77	85.77	85.77	85.77	85.77	85.77	85.77	85.77	85.77
Variable O&M costs ($1000/ yr)	2,374	2,374	2,374	2,374	2,374	2,374	2,374	2,374	2,374	2,374	2,374	2,374	2,374	2,374	4,139
Variable O&M costs (¢/kWh)	1.40	1.40	1.40	1.40	1.40	1.40	1.40	1.40	1.40	1.40	1.40	1.40	1.40	1.40	1.40
Total O&M costs (¢/ kWh)	2.63	2.63	2.63	2.63	2.63	2.63	2.63	2.63	2.63	2.63	2.63	2.63	2.63	2.63	2.63
CO_2 Credit (¢/kWh)	1.95	1.95	1.95	1.95	1.95	1.95	1.95	1.95	1.95	1.95	1.95	1.95	1.95	0.00	3.25
FUEL COST															
Coal Price ($/MMBtu)	1.25	1.25	1.25	1.25	1.25	1.25	1.25	1.25	1.25	1.25	1.25	1.25	1.25	1.25	1.25
($/kJ)	1.19	1.19	1.19	1.19	1.19	1.19	1.19	1.19	1.19	1.19	1.19	1.19	1.19	1.19	1.19
FINANCING ASSUMPTIONS															
Equity (%)	50.0	37.5	43.8	56.3	62.5	50.0	50.0	50.0	50.0	50.0	50.0	50.0	50.0	50.0	50.0
Corporate Tax (%)	20.0	20.0	20.0	20.0	20.0	15.0	17.5	22.5	25.0	20.0	20.0	20.0	20.0	20.0	20.0
Discount Factor (%)	10.0	10.0	10.0	10.0	10.0	10.0	10.0	10.0	10.0	7.5	8.8	11.3	12.5	10.0	10.0
Incremental Levelized COE (¢/kWh) **															
Financial Component	2.86	2.67	2.77	2.96	3.05	2.78	2.82	2.91	2.96	2.41	2.63	3.10	3.35	2.86	2.86
Fixed O&M	0.67	0.67	0.67	0.67	0.67	0.67	0.67	0.67	0.67	0.67	0.67	0.67	0.67	0.67	0.67
Variable O&M	0.97	0.97	0.97	0.97	0.97	0.97	0.97	0.97	0.97	0.97	0.97	0.97	0.97	0.97	0.97
CO_2 Credit	-1.95	-1.95	-1.95	-1.95	-1.95	-1.95	-1.95	-1.95	-1.95	-1.95	-1.95	-1.95	-1.95	0.00	-3.25
Fuel	0.57	0.57	0.57	0.57	0.57	0.57	0.57	0.57	0.57	0.57	0.57	0.57	0.57	0.57	0.57
Total	3.12	2.92	3.02	3.21	3.30	3.03	3.07	3.16	3.21	2.66	2.88	3.36	3.61	5.06	1.82
CO_2 Mitigation Cost ($ / ton)	35.3	33.1	34.2	36.4	37.4	34.3	34.8	35.8	36.4	30.2	32.7	38.0	40.9	57.4	20.6
($/tonne)	38.8	36.4	37.6	40.0	41.1	37.8	38.3	39.4	40.1	33.2	35.9	41.8	44.9	63.1	22.6

* Total costs for Case-2
** Incremental costs above Case-1 values
*** Base case = $15/ton CO_2; variations to 0 and 25 $/ton

5 SUMMARY AND RECOMMENDATIONS

Summary of Pilot Testing Results

Pilot-scale testing of the oxygen-fired CFB concept was performed at ALSTOM's 3.0 MW_{th} (9.9 MMBtu/hr) Multi-use Test Facility (MTF), located in Windsor, Connecticut. Key results from the testing are summarized below.

- The furnace was successfully operated on bituminous coal and petcoke in a 30% O_2 combustion medium (balance CO_2). There was no evidence of particle agglomeration or defluidization in the furnace.
- Because of the high CO_2 content of the flue gas, the furnace operated above 890 °C (1,650°F) to ensure calcination of the limestone for sulfur capture. In regions where the temperature was much cooler, there was evidence of recarbonation.
- The sulfur capture with lime only to the back-end baghouse/FDA system was slightly lower with oxygen firing compared to air firing. There is evidence of some CO_2 being captured in the FDA, along with the SO_2.
- Because of the high temperature, the sulfur emissions from the combustor were higher than normal for bituminous coal. For pet coke, the optimum temperature for sulfur capture is higher, so the oxygen-fired emissions were very low.
- Carbon monoxide emissions were higher with oxygen firing. This is likely due to the high CO_2 content of the flue gas, which hinders oxidation of the CO.
- As expected, the NO_x emissions were low with oxygen firing. Ammonia addition further reduced the NO_x emissions.
- The N_2O and VOC emissions were low under all circumstances.
- Carbon heat loss in the fly ash was comparable to, or lower than, the levels with air firing. The carbon loss was lower for pet coke than for bituminous coal.
- There was no significant difference in heat transfer to the furnace waterwall test sections between air and oxygen firing. This heat transfer is dominated by solids effects, which do not depend on the gas composition.
- The emissions of mercury and other trace metals when oxy-firing were at least as low as with air firing.
- The Moving Bed Heat Exchanger performed as expected in terms of heat transfer. The performance did not deteriorate or change due to changes in firing conditions of the test campaign; load, fuel, limestone, or air vs. O_2.
- The MBHE performance did not change with time due to fouling of the heat transfer surface, or experience loss of solids flow due to agglomeration

These results are largely as expected based upon earlier test results, and did not identify any major technical barriers to the oxygen-fired CFB concept.

Summary of Retrofit Design Study Results

This section summarizes the technical and economic evaluation results for the two case studies provided in this report. The two cases studied include **Case-1:** an existing air fired CFB steam plant base case and **Case-2:** a retrofit of the existing air fired CFB steam plant with oxygen firing and CO_2 capture. Further descriptions of the two study cases are presented below followed by a brief discussion of the major impacts of O_2 firing and CO_2 capture on the overall plant performance and economics.

Case-1: Existing CFB steam power plant without CO_2 Capture (Base Case).

Conventional existing air-fired CFB based steam power plant (~90 MWe-net) without CO_2 capture using a steam cycle with the following conditions: 138 bara/538 °C/538 °C, 7.6 cmHg (2,000 psia / 1,000 °F / 1,000 °F, 3.0 in. Hga).

Implication: Provides reference point for comparison of performance & economic analyses. Provides the existing plant to which the retrofit technology for O_2 firing and CO_2 capture are applied in Case-2.

Case-2: Retrofit of the Case-1 existing power plant to an oxygen firing with CO_2 capture, purification, compression and liquefaction.

Oxygen is provided from a cryogenic Air Separation Unit (ASU). The CFB Boiler Island provides a concentrated CO_2 flue gas product stream to the Gas Processing System (GPS) where it is further purified, compressed and liquefied to meet a specification for an Enhanced Oil Recovery (EOR) application.

Implication: Near term CO_2 capture concept. Cost savings for the Gas Processing System equipment as compared to commercially available amine scrubbing systems. Improved plant thermal efficiency and lower net plant output reduction as compared to amine based CO_2 capture systems (reduced energy penalty).

Impacts of O_2 Firing and CO_2 Capture:

The retrofit of an existing CFB boiler steam plant to oxygen firing and CO_2 capture has several significant impacts on the overall plant performance and economics for producing electricity.

With respect to plant performance, the net plant output is reduced by about 31 percent while the net plant thermal efficiency is reduced by about 12.0 percentage points. CO_2 emissions are reduced from 0.88 to 0.08 kg/kWh (1.94 to 0.17 lbm/kWh).

Retrofitting the existing CFB boiler to oxygen firing capability is relatively simple from a technical standpoint. The boiler requires a small amount of new equipment such as a new gas recirculation system, oxygen supply piping, FDA SO_2 removal system, CO_2 product ductwork (to the gas processing system), and new controls and instrumentation for the oxygen supply and the gas recirculation, and gas processing systems.

These new systems require significant acreage for locating new equipment. The new cryogenic air separation unit requires about 3,600 m^2 (0.9 acres) and the new gas processing system requires about 6,500 m^2 (1.6 acres). By comparison, the area required for the existing 90 MWe Boiler Island including the CFB boiler, fans, ducts, fuel and limestone silos, and baghouse is about 0.9 acres. Location of this new equipment on some existing sites can be difficult and may require long duct and piping runs between

the new and existing equipment.

The cost of the boiler modification scope is about 167 $/kW, based on the new power output. Most of this is for the new FDA system for SO_2 removal. The addition of commercially available cryogenic air separation and gas processing systems is technically straightforward, but costly. The complete plant retrofit is estimated to cost 1,545 $/kW. Ultimately, the cost of electricity (COE) is estimated to increase by 3.1 cents/kWh and CO_2 mitigation cost is calculated to be about 38.8 $/tonne(35.3 $/ton)of CO_2 avoided for this existing 90 MWe study unit.

Recommendations

Work on the evaluation of the oxygen fired CFB concept has resulted in a successful accomplishment of the following milestones:

- Concept screening in a bench-scale FBC facility
- Approximately 300 hours of concept validation in a 3.0 MW_{th} (9.9 MMBtu/hr) pilot-scale CFB
- Techno-economic analysis

Based on these results, ALSTOM feels that the appropriate next step is to begin the development of a commercial-scale demonstration project of the O_2 fired CFB technology, targeting the EOR application. To prepare for a large-scale demonstration of the oxygen-fired CFB concept, ALSTOM is actively seeking partners for this next step.

6 BIBLIOGRAPHY

Allen, G., "Coal Combustion in Advanced Burners for Minimal Emissions and Carbon Dioxide Reduction Technologies," European Commission Joule II Clean Coal Technology Program1992-1995, Volume II, Powder Coal Combustion Projects Final Reports, ISBN 92-9-828-006-7, 1997

Andersson, K. and Maksinen, P., "Process Evaluation of O_2/CO_2 Free Combustion in an O_2/CO_2 Power Plant," MSc Thesis, Chalmers University of Technology, Sweden, 2002

Bose, A. C., "Performance Simulation and Cost Assessment of Oxy-Combustion process for CO_2 Capture from Coal-Fired Power Plants," Presented at the Fourth Annual Conference on Carbon Capture and Sequestration, Alexandria, VA, May 2-5, 2005

Bozzuto, C., Nsakala, N., Liljedahl, G., Palkes, M., Marion, J., Vogel, D., Gupta, J.C., Fugate, M., and Guha, M., "Engineering Feasibility of CO_2 Capture on an Existing Coal-Fired Power Plant," Final Report for OCDO / DOE-NETL, under OCDO Contract No. CDO/D-98-8 and DOE Contract No. DE-FC26-99FT40576, Prepared by ALSTOM Power Inc., June 29, 2001

Chatel-Pelage, F., Marin, O., Perrin, N., Carty, R., Philo, G.R., Farzan, H., and Vecci, S.J., "A Pilot-Scale Demonstration of Oxy-Combustion with Flue Gas Recirculation in a Pulverized Coal-Fired Boiler," 28th International Technical Conference on Coal Utilization & Fuel Systems, Clearwater FL, USA, 2003

Chatel-Pelage, F., Varagani, R., Pranda, P., Perrin, N., Farzan, H., Vecci, S.J., Lu, Y., Chen, S., Rostam-Abadi, M., and Bose, A.C., "NO_x Control or CO2 Capture in Coal-Fired Power Plants: Why Using Oxygen?," 2004 AFRC-JFRC Joint International Combustion Symposium, Maui, USA, 2004

Charon, O., "Recent Developments and Future Trends in Oxy-Combustion Applications," 17th IFRF Topic Oriented Technical Meetings, Les Vaux de Cernay, France, 2000

Croiset, E. and Thambimuthu, K.V., "Coal Combustion with Flue Gas Recirculation for CO_2 Recovery," Proceedings of the 4th Greenhouse Gas Control Technologies," Eliasson, B., Riemer, P. and Wokaun, A., (ed.), pp. 581-586, 1999

Croiset, E., Thambimuthu, K.V., and Palmer, A., "Coal Combustion in O_2/CO_2 Mixture Compared with Air," The Canadian Journal of Chemical Engineering, Vol. 78, pp. 402-407, 2000

Dillon, D.J., White, V., Allam, R.J., Wall, R.A., and Gibbins, J., "Oxy Combustion Process for CO_2 Capture from Power Plant," IEA GHG R&D Programme Report Nº. 2005/9, June 2005

Dakota Gasification Company, "Carbon Dioxide Specifications," April 2005, http://www.dakotagas.com/specs/co2spec.pdf

Field, M.A., Gill, D.W., Morgan, B.B., and Hawksley, P.G.W., "Combustion of Pulverised Coal," BCURA, Leatherhead, England, 1967

Hottel, H. C. and Sarofim, A. F., "Radiative Transfer," McGraw Hill Book Company, New York, 1967

International Energy Agency, "Improvement in Power Generation with Post-Combustion Capture of CO_2," Report Number PH4/33, November 2004

International Energy Agency, "Oxy Combustion Processes for CO_2 Capture from Power Plants," Report Number 2005/9, July 2005

Jukkola, G., Turek, D., Levasseur, A., Teigen, B., and Thibeault, P., "Development of ALSTOM's Circulating Moving Bed Combustor," 17th International Conference on Fluidized Bed Combustion, Jacksonville, Florida, May 2003

Kakaras, E., Doukelis, A., Giannakopoulos, D., and Koumanakos, A., "CO_2 Sequestration Options for Coal-Fired Power Plants," 14th IFRF Members Conference, Noordwijkerhout, The Netherlands, 2004

Kiga, T., Takano, S., Kimura, N. Omata, K., Okawa, M., Mori, T., and Kato, M., "Characteristics of Pulverized-Coal Combustion in the System of Oxygen/Recycled Flue Gas Combustion," *Energy Conversion and Management,* Vol. 38, pp. S129-S134, 1997

Kimura, N., Omata, K., Kiga, T., Takano, S., and Shikisima, S., "The Characteristics of Pulverized Coal Combustion in O_2/CO_2 Recovery," *Energy Conversion and Management,* Vol. 36, pp. 805-808, 1995

Marin, O., Bugeat, B., Macadam, S., and Charon, O., "Oxygen Enrichment in Boilers," *2001 AFRC-JFRC-IEA Joint International Combustion Symposium,* Kauai, USA, 2001

Marion, J., Bozzuto, C., Nsakala, N., and Liljedahl, G., "Evaluation Of Advanced Coal Combustion & Gasification Power Plants With Greenhouse Gas Emission Control," Topical Phase-I DOE-NETL Report, under Co-operative Agreement No. DE-FC26-01NT41146 Prepared by ALSTOM Power Inc., May 15, 2003

McPhail, J. et al., "Pulverized Coal Combustion System for CO_2 Capture," European Commission Joule II Clean Coal Technology Program 1992-1995, Volume II: Powder Coal Combustion Projects Final Reports, ISBN 92-9-828-006-7, 1977

Nsakala, N., Liljedahl, G., and Turek, D., "Greenhouse Gas Emission Control by Oxygen Firing in Circulating Fluidized Bed Boilers: Phase II – Pilot Scale Testing and Updated Performance and Economics for Oxygen Fired CFB with CO_2 Capture," Final DOE-NETL Report, under Co-operative Agreement No. DE-FC26-01NT41146 Prepared by ALSTOM Power Inc., October 27, 2004

Nsakala, N.Y., Marion, J., Bozzuto, C., Liljedahl, G., Palkes, M., Vogel, D., Gupta, J.C., Guha, M., Johnson, H., and Plasynski, S., "Engineering Feasibility of CO_2 Capture on an Existing US Coal-Fired Power Plant," First National Conference on Carbon Sequestration, Washington, DC, 2001

Okawa, M., Kimura, N., Kiga, T., Takano, S., Arai, K., and Kato, M., "Trial Design for a CO_2 Recovery Power Plant by Burning Pulverized Coal in O_2 /CO_2," Energy Conversion and Management, Vol. 38, pp. S123-S127, 1997

Palkes, M., Liljedahl, G., Nsakala, N., McDonald, M., and Gupta, J.C., "Preliminary Design of a CO_2/O_2 Combustion Retrofit To an Existing Coal-Fired Boiler for CO_2 Extraction," Presented at Electric Power Gen '99 Conference, Baltimore, MD, April 20-22, 1999

Payne, R., Chen, S.L., Wolsky, A.M., and Richter, W.F., "CO_2 Recovery via Coal Combustion in Mixtures of Oxygen and Recycled Flue Gas," Vol. 67, pp. 1-16, 1989

Roberts, P.A., "Atmospheric Pulverized Coal Combustion Final Report," *European Commission Joule II Clean Coal Technology Program 1992-1995,* Volume *II: Powder Coal Combustion Projects Final Reports, ISBN*: 92-9-828-006-7, 1997

Simbeck, D.R., "CO_2 Mitigation Economics for Existing Coal-Fired Power Plants," First National Conference on Carbon Sequestration, Washington DC, 2001

Singh, D., Croiset, E., Douglas, P.L., and Douglas, M.A., "Techno-Economic study of CO_2 Capture from an Existing Coal-Fired Power Plant: MEA Scrubbing vs. O_2/CO_2 Recycle Combustion," Energy Conversion & Management, Vol. 44, pp. 3073-3091, 2003

Tan, R., Corraglo, G., Santos, S., and Spliethoff, H., "Oxy-Coal Combustion with Flue Gas Recycle for Power Generation Industry: A Literature Review," Study Report, IFRF Doc. No. G23/y/1, Velsen Noord, September 2005

Tan, Y. and Thambimuthu, K., "Oxy-Fuel Combustion for Near Zero Emission Fossil Fuel Power Plants," 14th *IFRF Members Conference,* Noordwijkerhout, The Netherlands, 2004

Thambimuthu, K. and Freund, P., "CO_2 Capture and Sequestration from Power Generation; Studies by the IEA Greenhouse Gas R&D Program". IEA Report, 1998

Varagani, AR., Chatel-Pelage F., Pranda, P., Lu, Y., Chen, S., Rostam-Abadi, M H., Vecci, S.J., and Bose, A.C., "Oxy-Combustion in Pulverized Coal-Fired Boiler: A Promising Technology for the Future," 3rd Annual Conference on Carbon Sequestration, Alexandria , USA, 2004

Wall, T., Sheng, C., and Gupta, R., "Oxy-Fuel Combustion for Sequestration Ready CO2 – Technology Status, Assessment and Research Needs," 14th IFRF Members Conference, Noordwijkerhout, The Netherlands, 2004

Wang, C.S., Berry, G.F., Chang, K.C., and Wolsky, A.M., "Combustion of Pulverized Coal Using Waste Carbon Dioxide and Oxygen," Combustion *and Flame,* Vol. 72, pp. 301-310, 1988

Wolsky, A.M., Daniels, E.J., and Jody, B.J., "Recovering CO_2 from Large and Medium Size Stationary Combustors," *Journal of Air and Waste Management,* Vol. 41, pp. 449-454, 1991

Woycenko, D.M., Ikeda, I., and van de Kamp, W.L., "Combustion of Pulverized Coal in a Mixture of Oxygen and Recycled Flue Gas," *IFRF Document No. F98/y/1,* 1994

Woycenko, D.M., van de Kamp, A.W.L., and Roberts, P.A., "Combustion of Pulverized Coal in a Mixture of Oxygen and Recycled Flue Gas," European Commission Joule II Clean Coal Technology Program 1992-1995, Volume II: Powder Coal Combustion Projects Final Reports, ISBN 92-9-828-006-7, 1997, [Also cited as Woycenko, et al., IFRF Document No. F98/y/4, 1995]

7 APPENDICES

Two appendices are provided which include the following information:

- Appendix I: Plant Drawings
- Appendix II: Plant Equipment Lists

7.1 Appendix I: Plant Drawings

This appendix shows selected equipment drawings for both Case-1 (the existing power plant before retrofit) and Case-2 (the existing power plant retrofitted with O_2 firing and CO_2 capture). The following list indicates the drawings included in this appendix.

Case 1 - Existing Plant Drawings:

1. Existing Site Drawing
   - Figure 7.1: Case 1 - Existing Site Plot Plan Drawing Identifying Selected Major Equipment Locations
2. Existing Boiler Drawings:
   -
   - Figure 7.2: Case-1 - General Arrangement Boiler Side Elevation Drawing (existing CFB boiler)
   - Figure 7.3: Case-1 - General Arrangement Boiler Plot Plan Drawing (existing CFB boiler)
   - Figure 7.4: Side Elevation Drawing of Existing Baghouse and ID Fan
   - Figure 7.5: Plan View of Existing Baghouse and ID Fan

Case-2 - Retrofit of Existing Plant to O_2 Firing and CO_2 Capture Drawings:

1. Modified Site Drawing:
   - Figure 7.10: Case 2 – Modified Site Plot Plan Drawing
2. Modified Boiler Drawings (showing new gas recirculation system, CO_2 product duct, and oxygen supply piping):
   -
   - Figure 7.6: Case-2 - General Arrangement of New Ductwork for Gas Recirculation and Oxygen Supply
   - Figure 7.7: Case-2 – Section Views of New Ductwork for Gas Recirculation and Oxygen Supply
3. Gas Processing System Layout Drawing:
   -
   - Figure 7.8: Case-2 - New Gas Cooler and Gas Processing System Layout Drawing
4. Air Separation Unit Layout Drawing:
   -
   - Figure 7.9: Case 2 – New Air Separation Unit Layout Drawing

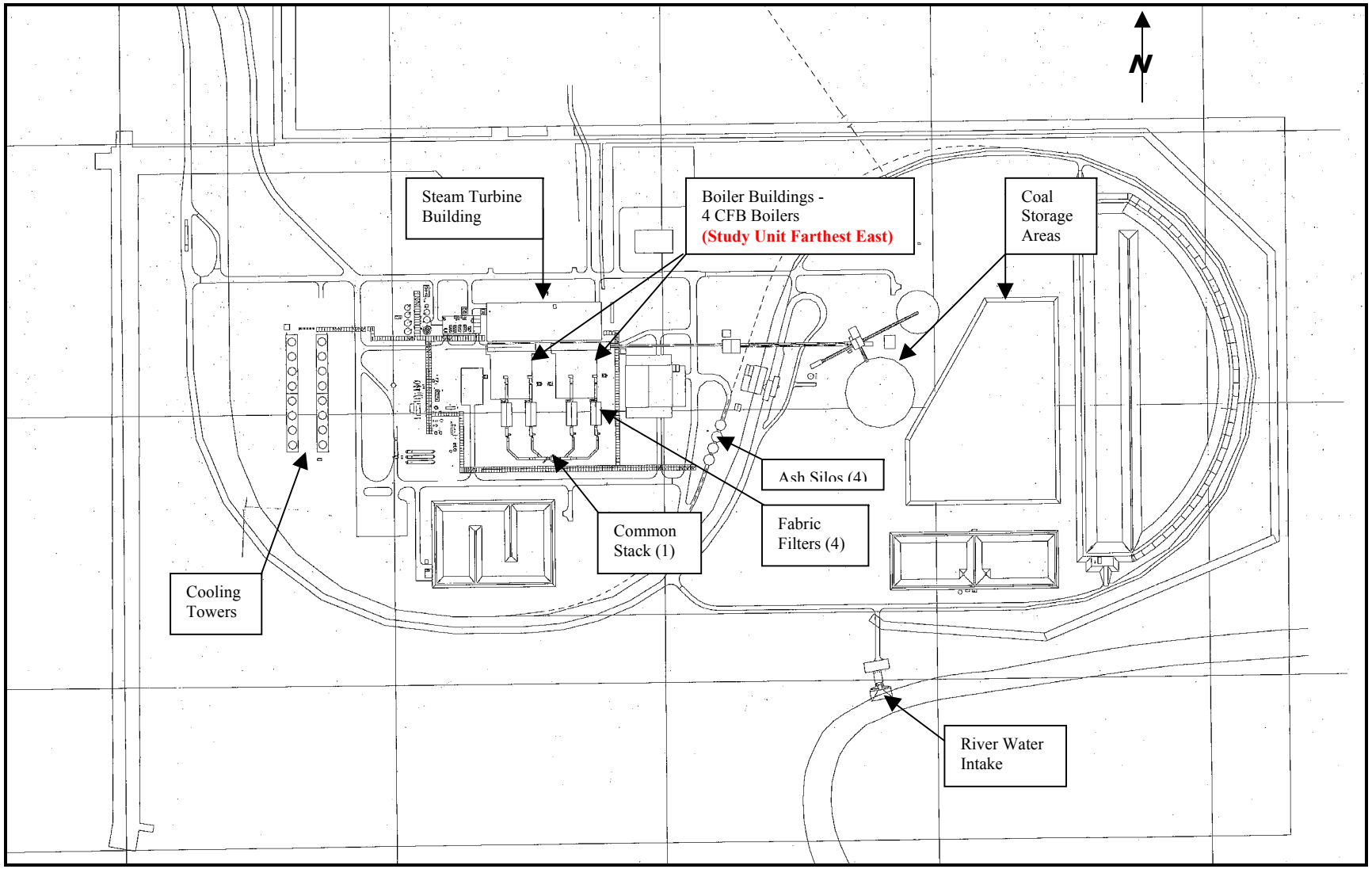

Figure 7.1: Case 1 - Existing Site Plot Plan Drawing Identifying Selected Major Equipment Locations

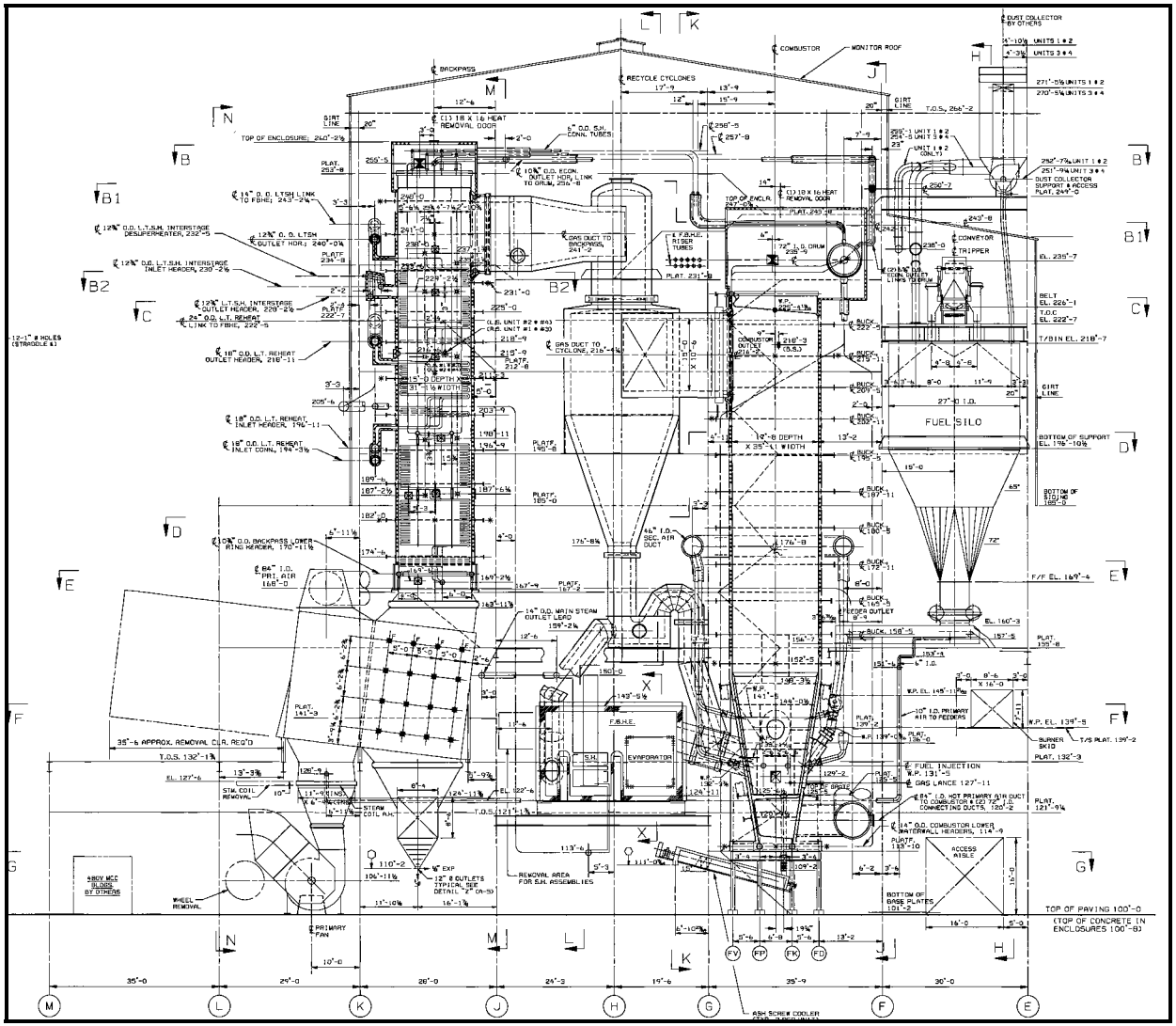

Figure 7.2: Case-1 - General Arrangement Boiler Side Elevation Drawing (existing CFB boiler)

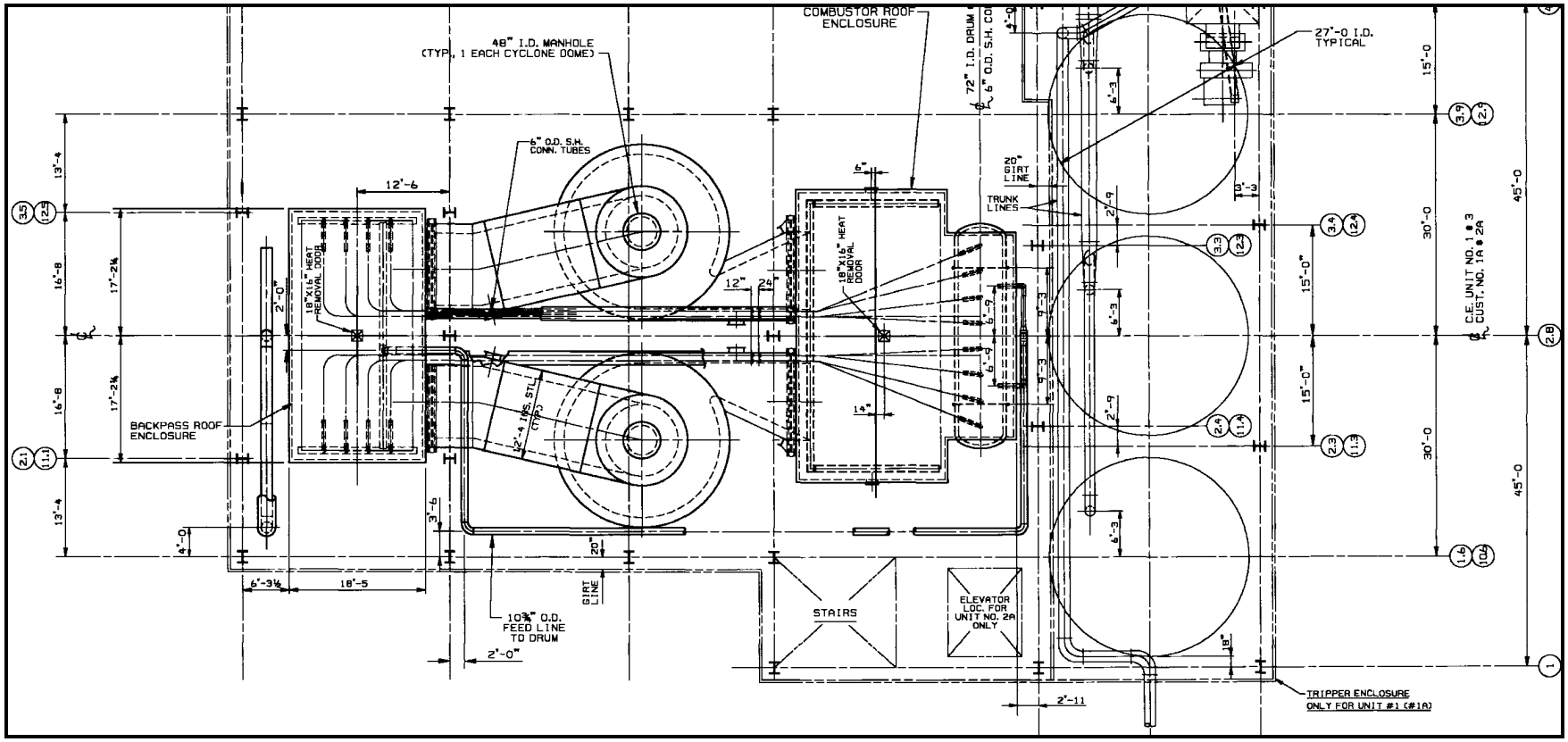

Figure 7.3: Case-1 - General Arrangement Boiler Plot Plan Drawing (existing CFB boiler)

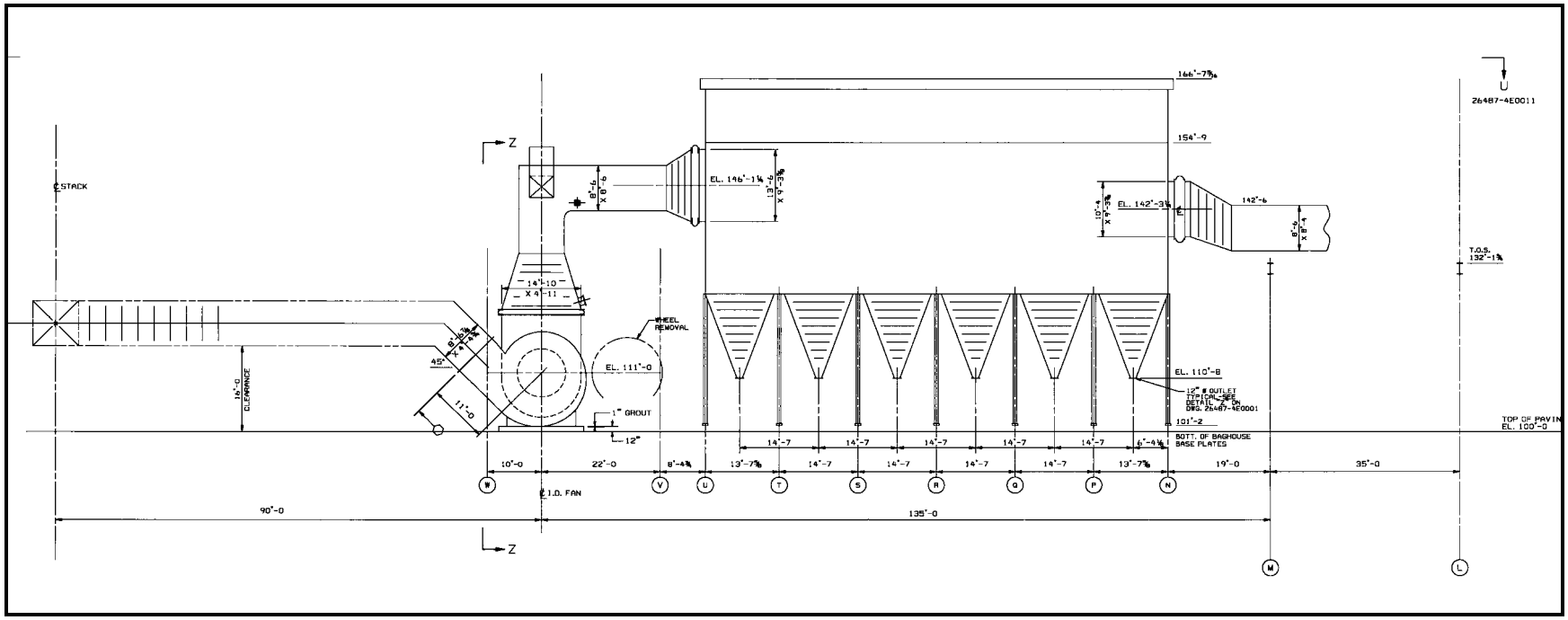

Figure 7.4: Side Elevation Drawing of Existing Baghouse and ID Fan

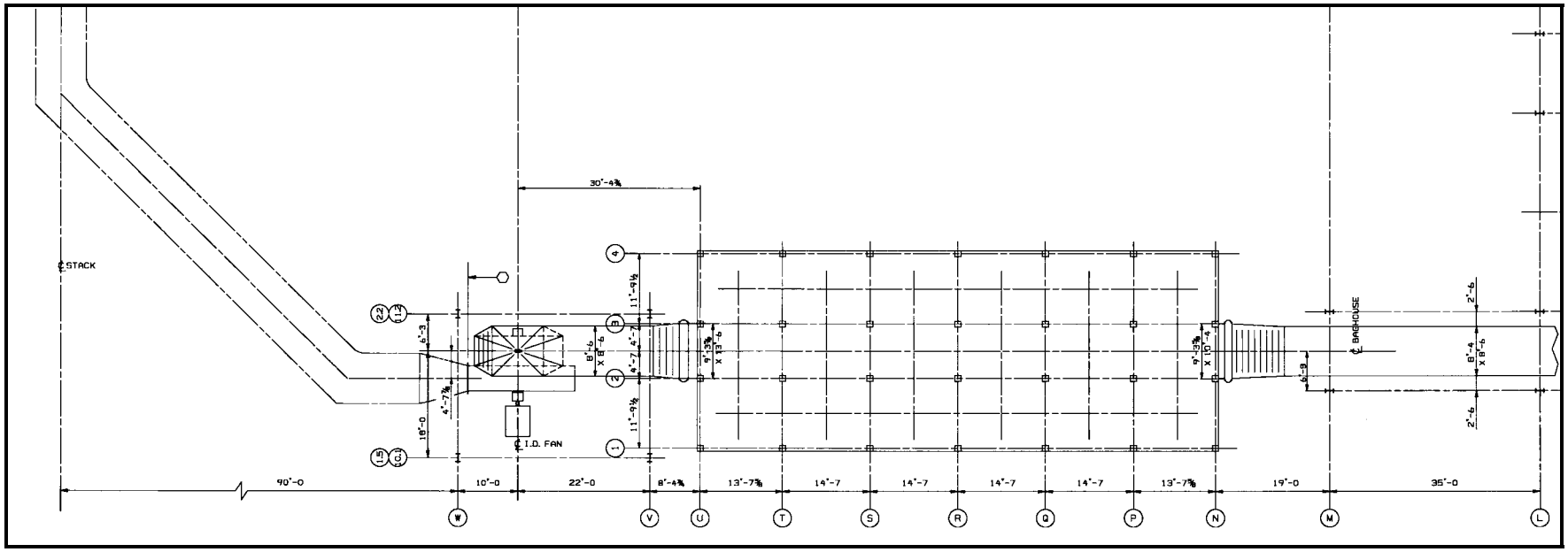

Figure 7.5: Plan View of Existing Baghouse and ID Fan

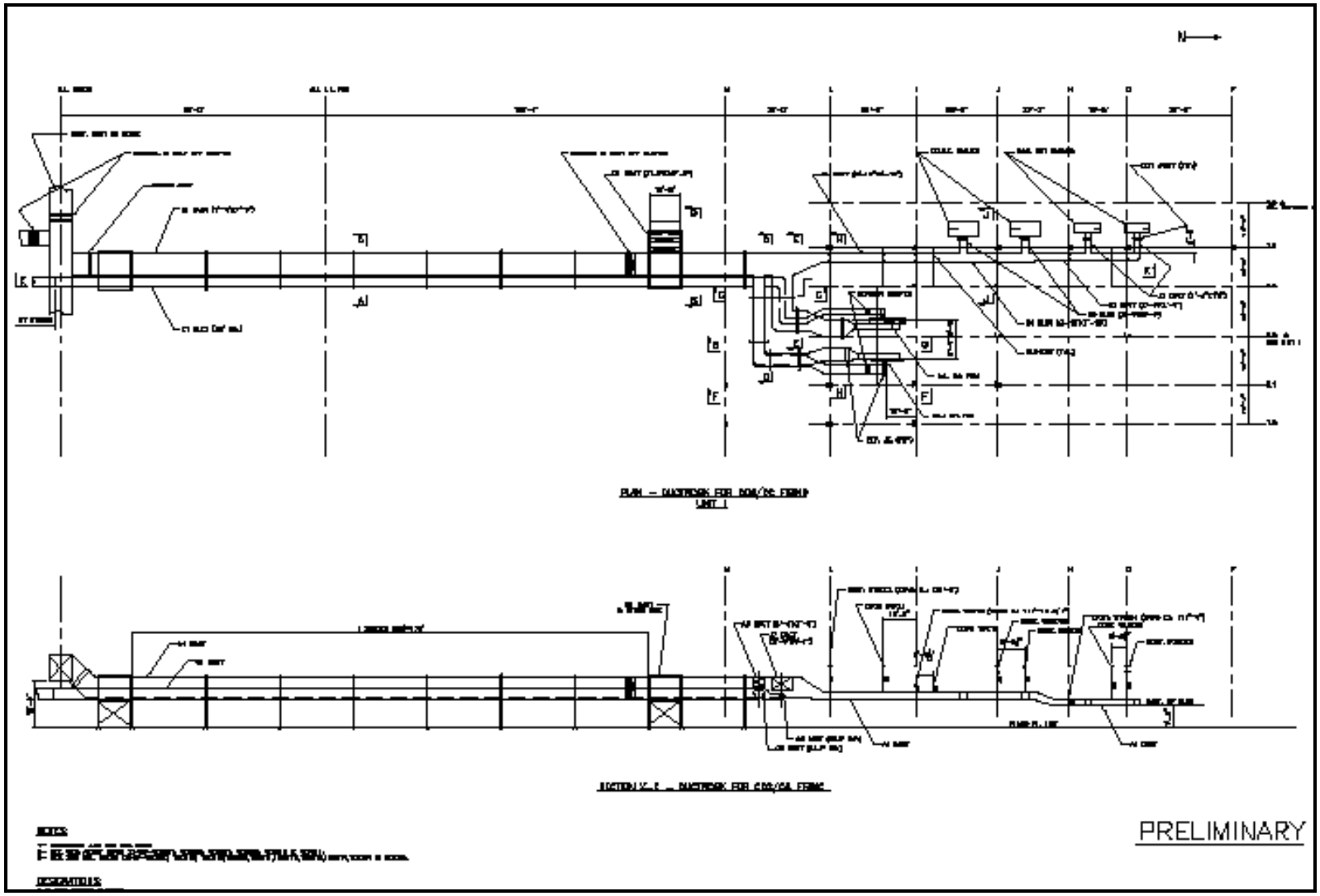

Figure 7.6: Case-2 - General Arrangement of New Ductwork for Gas Recirculation and Oxygen Supply

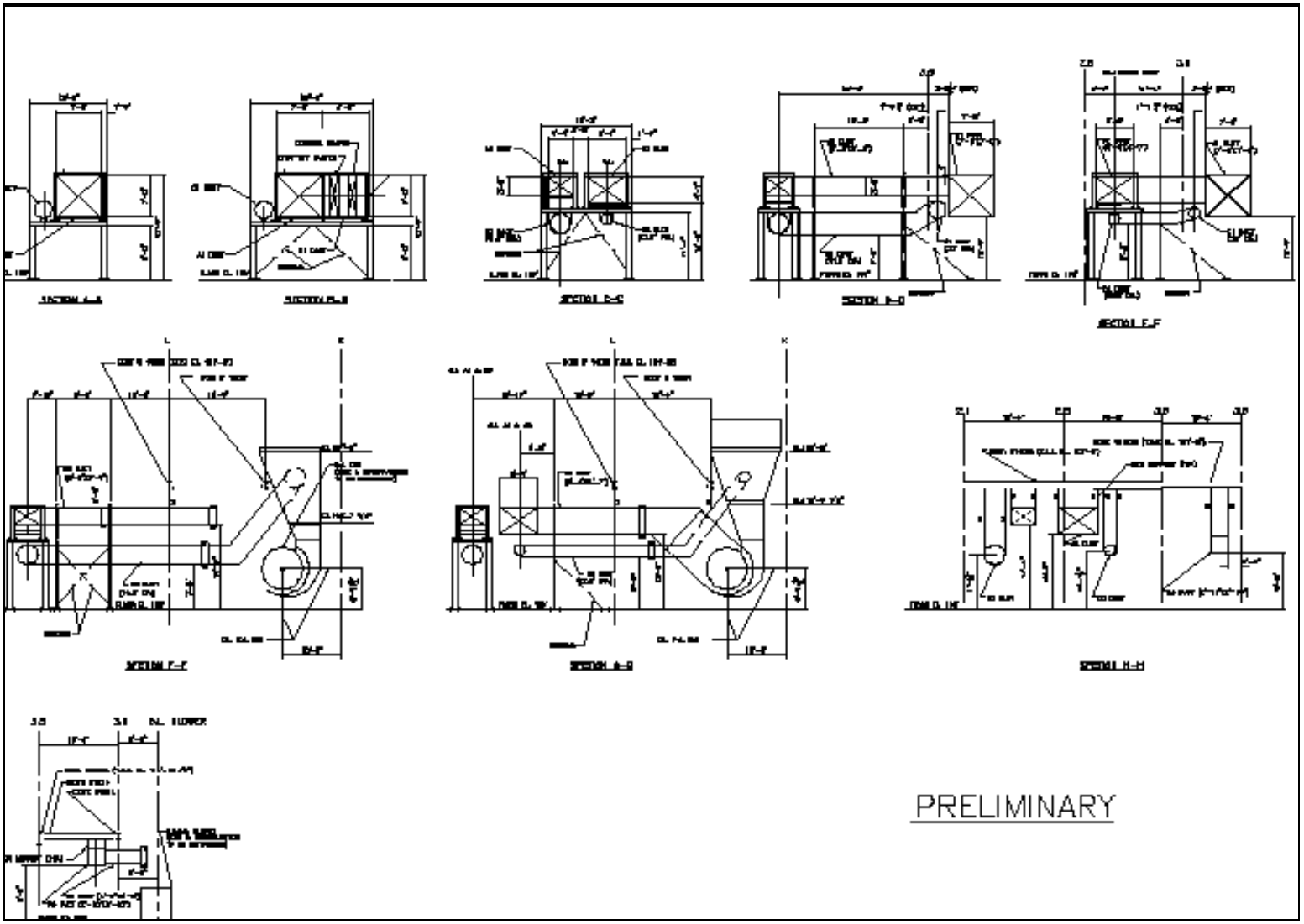

Figure 7.7: Case-2 – Section Views of New Ductwork for Gas Recirculation and Oxygen Supply

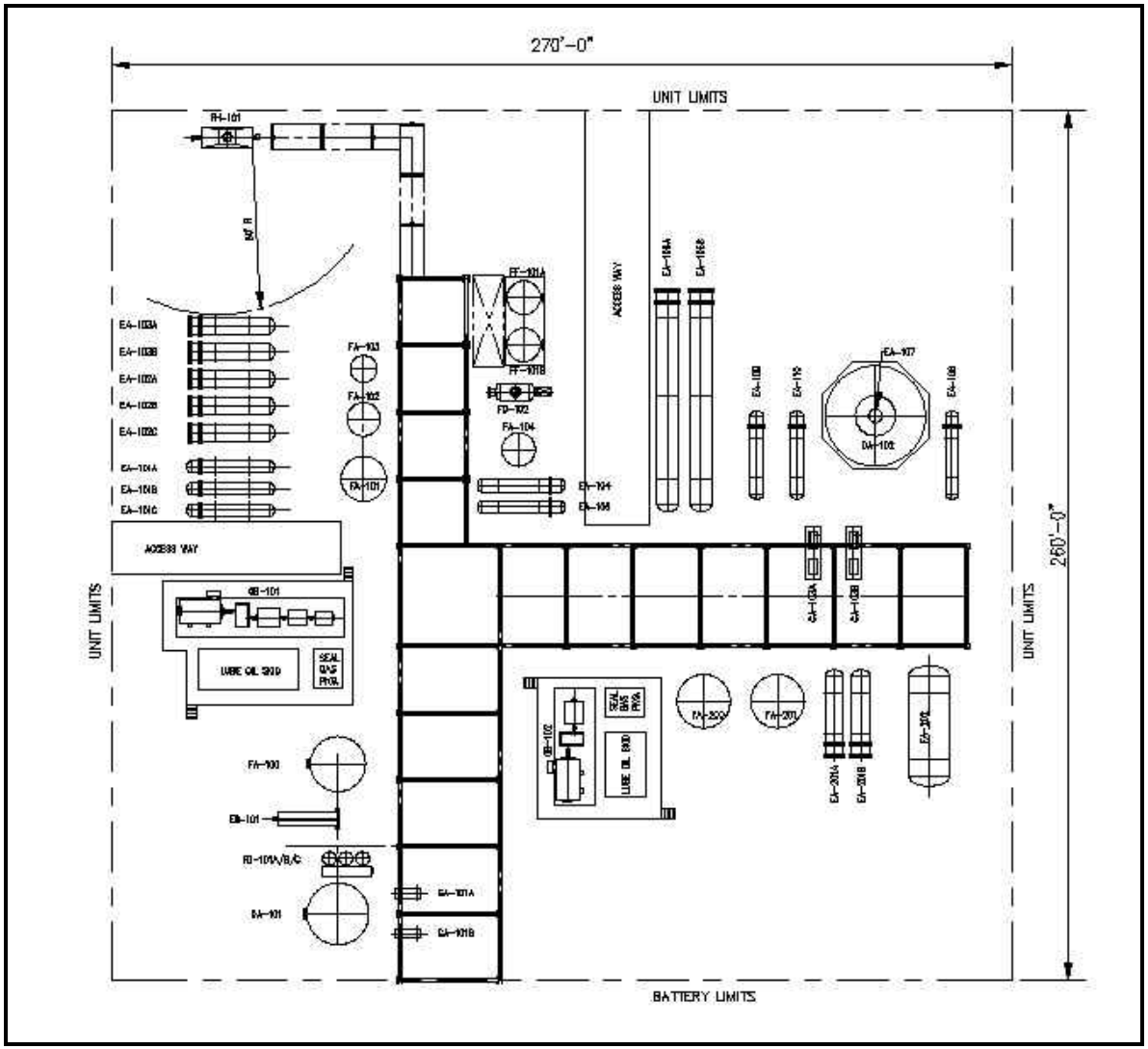

Figure 7.8: Case-2 - New Gas Cooler and Gas Processing System Layout Drawing

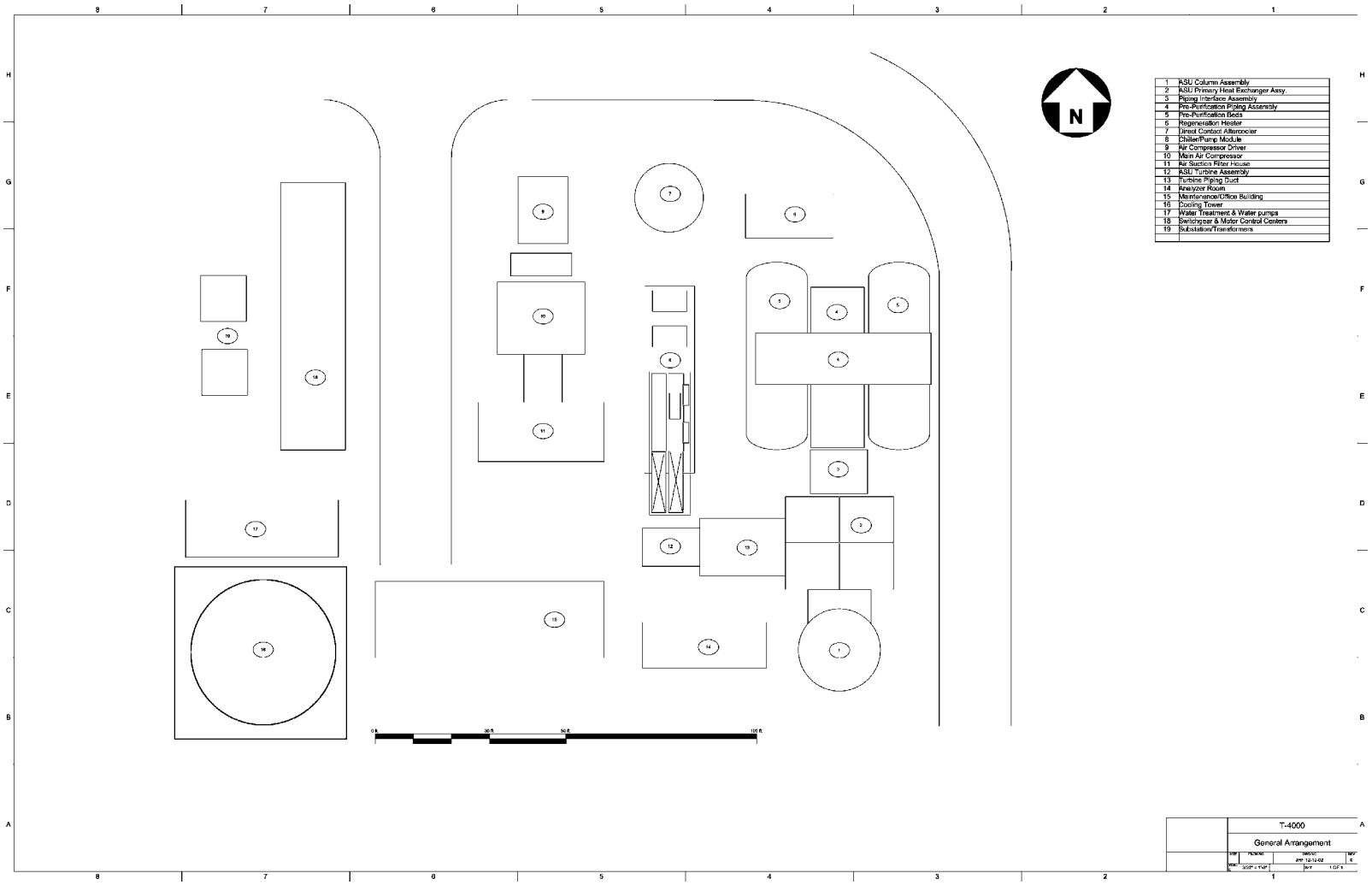

Figure 7.9: Case 2 – New Air Separation Unit Layout Drawing

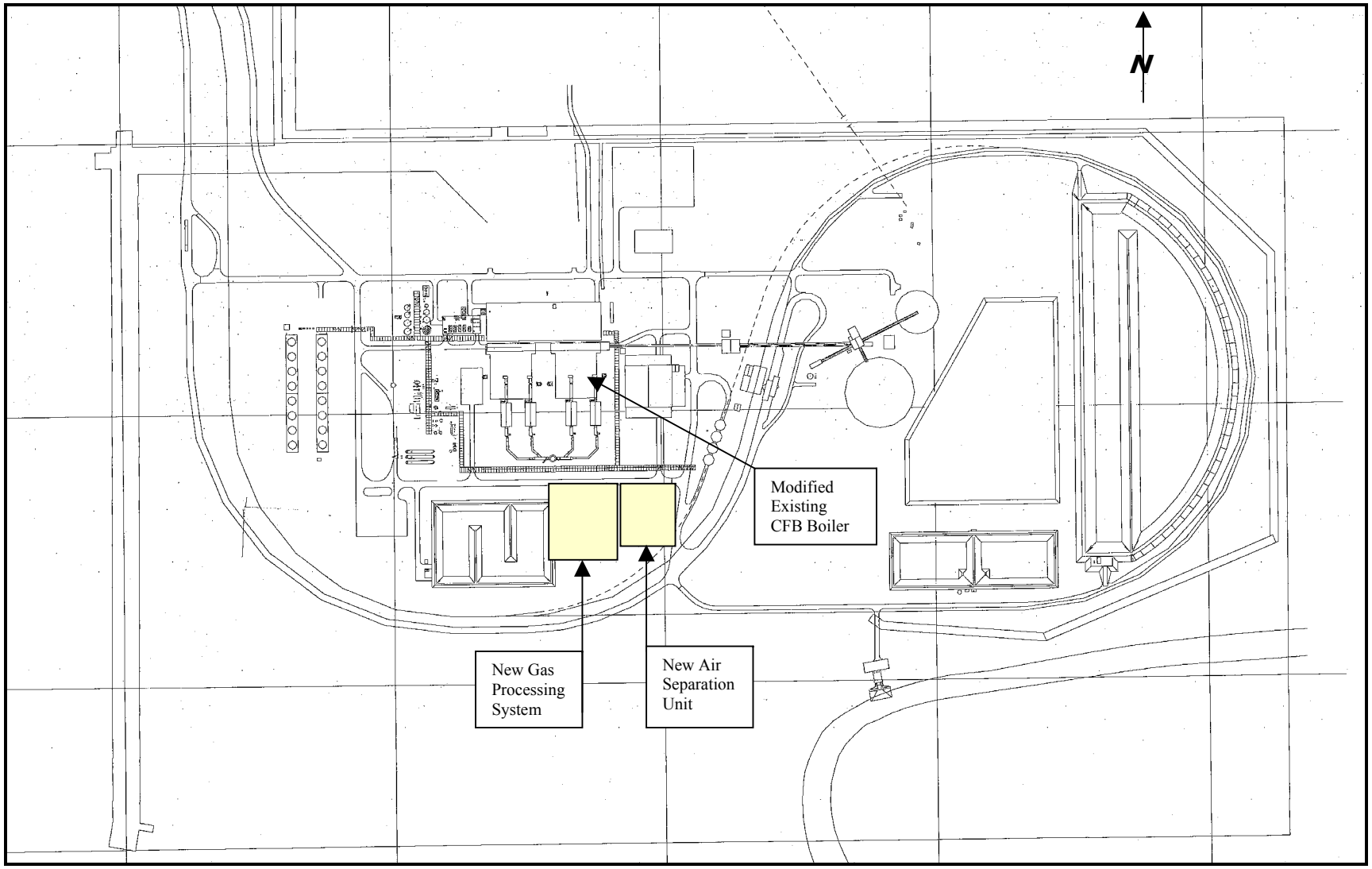

Figure 7.10: Case 2 – Modified Site Plot Plan Drawing Showing Locations of Existing Boiler and Major New Equipment

7.2 Appendix II: Plant Equipment Lists

This appendix shows equipment lists. The existing plant equipment for Case-1 is not listed. Only major new equipment that is added to the existing plant for retrofit Case-2 is shown in these lists:

- The Case-2 Modified CFB Boiler (new equipment added for O_2 fired retrofit)
- The Case-2 Gas Processing System
- The Case-2 Air Separation Unit

7.2.1 Case-2: Modified CFB Boiler Equipment

The equipment listed below defines the new equipment that was added to the existing CFB boiler to support O_2 firing and CO_2 capture. Two groupings, boiler equipment and FDA system equipment, are shown.

Boiler Retrofit Equipment:

- CO_2 Header Main Control Damper – V-1
- CO_2 Header Control Damper – V-2
- External Heat Exchanger Isolation Damper and Actuator – V-3 (existing)
- External Heat Exchanger Isolation Damper and Actuator– V-4 (existing)
- Atmospheric Air Duct Vent Control Damper and Actuator – V-5
- Atmospheric Air Duct Vent Isolation Damper and Actuator – V-6
- Air Separation Unit Inlet Control Damper and Actuator to PA Fan – V-7
- Air Separation Unit Inlet Control Damper and Actuator to SA Fan – V-8
- Stack Zero Leakage Isolation Gate and Actuator – V-9
- Stack Flow Control Damper and Actuator – V-10
- Gas Processing System Control Damper and Actuator – V-11
- Gas Processing System Isolation Damper and Actuator – V-12
- A-1 Main CO_2 header duct and expansion joints
- A-2 CO_2 header duct to PA fan and expansion joints
- A-3 CO_2 header duct to SA fan and expansion joints
- A-4 CO_2 duct to FBHE and Seal Pot Fans with expansion joints
- A-5 CO_2 duct to Seal Pot Fans with expansion joints
- A-6 CO_2 takeoff duct to FBHE Fans with expansion joints
- A-7 CO_2 takeoff duct to Seal Pot Fans with expansion joints
- A-8 CO_2 duct to Seal Pot Fan and expansion joints
- A-9 CO_2 duct to Gas Processing System and expansion joints
- B-1 Air inlet duct and expansion joints
- C-1 O_2 header duct with expansion joints
- C-2 O_2 duct to PA fan with expansion joints
- C-3 O_2 duct to SA fan with expansion joints
- CO_2 meters

- O_2 meters
- Associated pressure and flow transmitters
- New ID Fan and Motor
- Necessary design and engineered drawings, including mechanical and control, to complete the system retrofit.

Major equipment for the new FDA system:

- FDA Reactor Chamber
- FDA Mixer
- Fabric Filter Air Slides
- FDA Settling Chamber
- FDA Fluid Trough
- Fluidizing Air Blowers
- Compressed Air System
- FDA Controls

7.2.2 Case-2: New Gas Processing System Equipment

This equipment list is for a Gas Processing System, which provides nominally 1,900 tonne/day (2,100 ton/day) of CO_2 liquid product at 138 barg (2,000 psig) and 99.8 percent purity for an EOR application.

Tag No.	Service	Sizing Parameters	MOC			
DA	Columns and Towers					
DA-101	Direct Contact Flue Gas Cooler	20' 0" ID x 40' S/S, DP 14 psig, 3 psi vacuum	CS w/ SS liner	10' of M 250 X Sulzer structured packing		
DA-102	CO2 Column	4'/ 10' ID x 57'/ 16' S/S, DP 475 psig	LTCS	Twenty four 48" dia SS trays		
EA	Shell & Tube Exchangers					ft^2/ shell
EA-101	Flue Gas Compressor 1 Stage Aftercooler	10.9 MMBTU/h, DP S/T, 150 psig/ 85 psig	CS/SS	1 Shell	60" dia x 20' long	10 900
EA-102	Flue Gas Compressor 2 Stage Aftercooler	9.3 MMBTU/HR, DP S/T, 150 psig/ 125 psig	CS/SS	1 shell	38" dia x 20' long	1 210
EA-103	Flue Gas Compressor 3 Stage Afterooler	9.775 MMBTU/HR, DP S/T, 150 psig / 225 psig	CS/SS	1 shell	32" dia x 20' long	785
EA-104	Flue Gas Compressor 4 Stage Aftercooler	3.86 MMBTU/HR, DP S/T, 150 psig/ 485 psig	CS/SS	1 shell	23" dia x 20' long	410
EA-105	CO2 Feed Condenser	26.3 MMBTU/HR DP S/T 300 psig/ 475 psig	LTCS/LTCS	2 shells	60" dia x 40' long (kettle)	7800 ft2/ shell
EA-106	CO2 Column Reboiler	4.75 MMBTU/HR, DP S/T, 485 psig/ 475 psig	SS/CS	1 shell	17" x 20' long	750 ft2
EA-107	CO2 Column Condenser	2.8 MMBTU/HR, DP S/T, 475 psig/ 475 psig	SS/SS	1 shell	48" x 11' long	4100 ft2
EA -108	CO2 Column Ovhd Interchanger	0.5 MMBTU/HR, DP S/T, 475 psig/ 475 psig	SS/ SS	1 shell	25" x 20' long	1900 ft2
EA -109	Recycle CO2 Superheater	0.25 MMBTU/HR, DP S/T, 475 psig/ 475 psig	SS/ SS	1 shell	16" x 20' long	700 ft^2
EA-110	Feed/ CO2 product interchanger	2.0 MMBTU/HR, DP S/T, 475 psig/ 2200 psig	CS/CS	1 shell	30" x 20' long	2775 ft2
EA-201	Refrig condenser	40.4 MMBTU/HR, DP S/T, 300 psig/ 125 psig	CS/CS	2 shells	56" x 20' long	9880 ft2/ shell
EB	Plate Exchangers					
EB-101	Water Cooler	67 MMBTU/HR, DP P/U, 100 psig/ 125 psig	SS	1 Exch	3' 10" x 18'	22,700 ft^2
FH	Heaters					
FH-101	Drier Regeneration Gas Heater	Gas fired, 4.6 MMBTU/HR fired duty				
FA	Drums and Vessels					
FA-100	Flue Gas Compressor 1st Stage Suction Drum	10' - 10" ID x 18' S/S, DP 50 psig	CS w/ SS liner			
FA-101	Flue Gas Compressor 2nd Stage Suction Drum	9' - 0" ID x 18' S/S, DP 85 psig	CS w/ SS liner			
FA-102	Flue Gas Compressor 3rd Stage Suction Drum	7' - 8" ID x 14' S/S DP 125 psig	CS w/ SS liner			
FA-103	Flue Gas Compressor 4th Stage Suction Drum	6' - 2" ID x 14' S/S, DP 225 psig	CS w/ SS liner			
FA-104	Flue Gas Compressor 4th Stage Discharge K/O Drum	4" - 4" ID x 12" S/S DP 485 psig	CS w/ SS liner			
FA-200	Refrig Compr 1st Stage Suct Scrubber	10' - 4" ID x 16' S/S DP 300 psig	CS			
FA-201	Refrig System Economizer	5' - 0" ID x 18' S/S, DP 300 psig	LTCS			
FA-202	Refrig Surge Drum	8' - 0" ID x 40' S/S DP 300 psig	CS			
FD	Filters					
FD-101	Water Filter	3 units, 700 gpm each, DP 100 psig	SS	3 vertical filters 30" dia		
FD-102	Flue Gas Filter	Total 1130 ACFM, DP 475 psig	CS	Horizontal 34" dia x 10' S/S		
FF	Dryers (Dessicant Type)					
FF-101A/B	Flue Gas Drier	Two Vessels 6' -7 " ID x 10' S/S DP 485 psig DT 550 F	CS			
GA	Pumps Centrifugal					
GA-101 A/B	Water Pump	3,857 gpm, DP 40 psi	CI w/ SS impeller			
GA-103 A/B	CO2 Pipeline pump	340 gpm, 10% design margin, DP 1610 psi	CS			
GB	Compressors & Blowers					
GB-101	Flue Gas Compressor	Motor Drive 4 stages Includes Lube/Seal Oil Systems, 8,800 kW NOTE 1	CS w/ SS wheels	45' x 11'		
GB-102	Propane Refrig Compressor	Motor Drive, 2 stage Includes lube oil/ seal oil system, 4,100 kW NOTE 1	CS	35' x 10'		
		NOTES				
		1. Compressor motor power includes 1.02 design margin for gear losses and 1.1 design margin for API Standard				

7.2.3 Case-2: New Air Separation Unit Equipment

This equipment list is for an air separation unit, which provides nominally 1,640 tonne/day (1,800 ton/day) of oxygen to the CFB boiler at 0.3 barg (4 psig) and 99 percent purity. The flows, capacities, adsorbent weights, and vessel sizes shown in this equipment list have been prorated from a similar equipment list provided by Praxair for a larger ASU used in a previous study (Marion, et al., 2003).

Rotating Equipment

Main Air Compressor (Qty 1)

One centrifugal compressor meets the entire range of plant air. The compressor is a 3-stage high efficiency integral gear centrifugal compressor. Included with the compressor are adjustable inlet guide vanes, coupling with guard, lube oil system and three aftercoolers. The aftercoolers (shell and tube heat exchangers) are part of a low-level heat recovery system, which is integrated with the plant steam cycle to improve overall plant efficiency. Additionally, a Direct Contact Aftercooler is used after the third stage shell and tube aftercooler. The compressor is driven by a synchronous electric motor which is field mounted on its own foundation.

Delivered Air Flow:	224,000 Nm^3/h (8,500,000 cfh-ntp)
Suction Temperature:	27°C (80°F)
Discharge Pressure:	6 bar(a) (87 psia)

Upper Column Turbine Skid (UCT) (Qty 1)

A Cryogenic expansion turbine provides refrigeration for producing liquid products and heat leak for the distillation process. The Turbine is sized for plant specific requirements. Lube oil is provided by an integral lube oil skid.

Delivered Flow:	9,900 Nm^3/h (376,400 cfh-ntp)
Isothermal Efficiency:	90
Inlet Temperature:	-88°C (-127°F)
Exhaust Pressure:	1.4 bar(a) (21 psia)

Process Equipment

Air Suction Filter House (ASFH) (Qty 1)

A pulse jet type filter house will be implemented for this case. The filter will be built in 3 modules.

Overall Efficiency:	100 retention of 3 micron particles
Design Flow	224,000 Nm^3/h (8,500,000 cfh-ntp)

Aftercooler (shell & tube) (Qty 3); Direct Contact Aftercooler (DCA) (Qty 1)

The heat of compression from the MAC is removed with three aftercoolers (shell and tube heat exchangers) integrated with the plant steam cycle and a two-stage Direct Contact Aftercooler (DCA). The DCA is a packed column where water is put in direct contact with compressed air leaving the third stage shell and tube aftercooler. The 1st stage of the DCA is cooled by water from the plant cooling water system. The air exiting this first stage is cooled to within 1°C (1.8°F) of the cooling water inlet temperature. The 2nd stage of the DCA is fed by a closed chilled water loop. A Mechanical Chiller provides the refrigeration to chill this stage's water loop. The air exiting the 2nd stage is

designed to be at 15°C (59°F) or less to feed the Prepurifier system. An integral Moisture Separator is provided to remove 99.9 of free water droplet 3 microns and larger.

DCA - Design Discharge Air Temp.:	10.0°C (50°F) Process Air to TSA PP
1st Stage Packing Height:	2.4 m (9.5 ft)
1st Stage Water Flow:	8,300 l/min (2,200 gpm)
2nd Stage Packing Height:	3.2 m (9.5 ft)
2nd Stage Water Flow:	3,820 l/min (1,010 gpm)

Mechanical Chiller (Qty 4)

An R-134A mechanical chiller provides refrigerant to cool the 2nd stage DCA chilled water. The mechanical chiller cools down the water to within the desired process temperature. The chiller consists of one full sized, centrifugal refrigerant compressor, and shell and tube heat exchangers for the evaporator and condenser services.

Tons @ 100 Load	200 (800 Total)
Water Design Temperature:	8.9ºC (48ºF)
Evaporator Water Flow:	3,820 l/min (1,010 gpm)

DCA Chilled Water Pumps (Qty 2)

	Chilled Water Pump	**1st Stage DCA Pump**
Pump Flow Range:	3,820 l/min (1,010 gpm)	18,930 l/min (5,000 gpm)
Design TDH:	20 m (65 ft)	39 m (127 ft)

TSA Prepurifier Vessels (Qty 2)

The air purification system is designed to remove water and CO_2 from the feed air stream going to the column or other warm end piping in order to prevent fouling heat exchangers from CO_2 buildup in the main condenser. The system is designed as a horizontal two-bed system with each vessel containing a bed of molecular sieve. While one vessel is removing water and CO_2 from the feed air stream, the other bed is being regenerated at low pressure by hot N_2 from a Regeneration Heater. Water, CO_2, and other hydrocarbons are desorbed from the sieve and vented to atmosphere.

Design Inlet Air Temperature:		10.0°C (50°F) {Process Air from DCA}
Adsorbents:	Sieve:	4x8 13X APG II Molecular Sieve 37,800 kg (83,400 lbs) Each
	Alumina:	D-201 Alumina 12,900 kg (28,500 lbs) Each
Est. Vessel Size:		3.4 m Diam. x 13.1 m L (11 ft. Diam. x 43 ft. L) (Seam to Seam)

TSA Prepurifier Dust Filter (Qty 2)

Following adsorption, the air passes through one full-size Dust Filter to remove any particles of molecular sieve. The filter design provides positive gasket sealing to prevent by-pass of unfiltered fluids.

Filter Efficiency:	99 retention of 1 micron particles 100 retention of 3 micron particles

TSA Prepurifier Natural Gas Regeneration Heater

One 100 Natural Gas Regeneration/Thaw heater is used to heat the Regeneration N_2 and Thaw Air. The unit is packaged and mounted on a single skid. The burners are fully modulating, with combustion air blower and motor. A packaged control system is included for control and safety monitoring.

Design Regeneration Flow:	33,000 Nm^3/h (1,253,000 cfh-ntp)
Design Heat Duty:	3,123 kW (10,700,000 Btu/hr)
Inlet Temp	29 °C (85 °F)
Outlet Temp	232 °C (450 °F)
Peak Fuel Consumption	424 Nm^3/h (15,000 scfh)

Silencers

All silencers provide a 35-dBA-insertion loss. 50-dBA attenuation is also available.

	MAC Vent (Qty 1)	Waste Nitrogen Vent (Qty 1)
Inlet:	303mm (16 in) dia	337 mm (13 in.) Diam
Outlet:	1,817 mm (64 in) diam	1,817 mm (64 in.) Diam
Length:	3,046 mm (120 in)	3,046 mm (120 in.)

	Prepurifier Vent (Qty 1)	Product Oxygen Vent (Qty 1)
Inlet:	168 mm (7 in.) Diam	454 mm (18 in.) Diam (Reduced)
Outlet:	437 mm (17 in.) Diam	663 mm (40 in.) Diam
Length:	1,803 mm (71 in.)	4,242 mm (167 in.)

Cold Box Equipment

Primary Heat Exchanger (PHX) (Qty 1)

Oxygen Boiler

Main Condenser

Lower Column

Upper Column

Additional Equipment and Services

• Local Instruments & Controls	Praxair
• Switchgear & MCC	Praxair
• Process Analyzers	Praxair
• Cooling System	Client
• Project Management & Engineering	Praxair
• Construction Management	Praxair
• Construction	Local Contractors
• Commissioning & Startup	Praxair with Client support
• Land/Site	Client
• Control Room/Administration Offices/Warehouse/Maintenance Shop, etc.	Client
• Start-Up Utilities	Client

COMMERCIALIZATION DEVELOPMENT OF OXYGEN FIRED CFB FOR GREENHOUSE GAS CONTROL

VOLUME II

DESIGN STUDY OF A CAPTURE READY CFB STEAM PLANT RETROFIT TO OXYGEN FIRING AND CO_2 CAPTURE

FINAL REPORT

SUBMITTED BY

ALSTOM POWER INC.
POWER PLANT LABORATORIES

2000 DAY HILL ROAD

WINDSOR, CT 06095

(860) 688-1911

Principal Authors:

Gregory N. Liljedahl

Nsakala ya Nsakala

PREPARED FOR

NETL AAD DOCUMENT CONTROL BLDG. 921
US DEPARTMENT OF ENERGY
NATIONAL ENERGY TECHNOLOGY LABORATORY
P.O. BOX 10940
PITTSBURGH, PENNSYLVANIA 15236-0940
(COOPERATIVE AGREEMENT NO. DE-FC26-04NT42205)

FINAL REPORT SUBMITTAL DATE: AUGUST 24, 2007
PERFORMANCE PERIOD: OCTOBER 1, 2004 – JUNE 30, 2007

DISCLAIMER

This report was prepared as an account of work sponsored by an agency of the United Sates Government. Neither the United States Government nor any agency thereof, nor any of their employees makes any warranty, express or implied, or assumes any legal liability or responsibility for the accuracy, completeness, or usefulness of any information, apparatus, product, or process disclosed, or represents that its use would not infringe privately owned rights. Reference herein to any specific commercial product, process, or service by trade name, trademark, manufacturer, or otherwise does not necessarily constitute or imply its endorsement, recommendation, or favoring by the United States Government or any agency thereof. The views and opinions of authors expressed herein do not necessarily state or reflect those of the United States Government or any agency thereof.

ACKNOWLEDGMENTS

The authors gratefully acknowledge the following people for their contributions to the successful performance of the work presented herein:

Richard Waryasz, Pierre Gauville, Roland Tetreault, Diane Calkin, Carl Bozzuto, Rolf Hesterman, Neil Canvin, Ray Chamberland, and Glen Jukkola of ALSTOM Power Inc., and Vlad Vaysman of WorleyParsons Group Inc. for their contributions.

The financial support of this project by DOE National Energy Technology Laboratory (Contract No DE-FC26-04NT42205) and ALSTOM Power Inc. is also acknowledged.

PUBLIC ABSTRACT

Coal-fired power plants of the future will likely need systems that enable the cost effective capture and sequestration of their CO_2 emissions, since fossil fuels will remain the primary energy source for the foreseeable future. ALSTOM is evaluating several options in the mitigation of greenhouse gases from fossil fuel combustion. One of the potential technologies to accomplish this is oxy-combustion.

The basic concept in using oxygen firing with today's coal combustion technologies is to replace combustion air with a mixture of oxygen and recycled flue gas, thereby creating a high CO_2 content flue gas stream as shown in the figure below. The flue gas stream leaving the boiler can be simply dried and compressed for sequestration, or further processed into a high purity CO_2 product for various uses such as enhanced oil recovery or enhanced gas recovery.

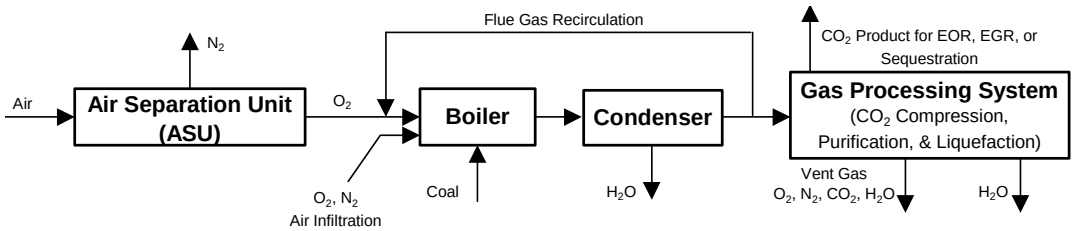

The objective of this study is to determine the attributes and quantify the economics of 600 MW-class supercritical (SC) circulating fluidized bed (CFB) power plants that are CO_2 capture-ready via future oxygen firing. This study investigates the feasibility of designing capture-ready CFB based power plants with additional provisions (other than just adding the ASU and GPS) such that additional modifications can be made at the time the plant is converted to O_2 firing and CO_2 capture to allow the net power output from the plant to be conserved.

The retrofit of traditionally designed steam power plants for CO_2 capture has been shown to reduce plant output significantly, be very energy intensive, costly, and quite often not enough site space is available for optimally installing the CO_2 capture equipment. This work identifies the impacts on overall plant performance, costs, and economics of converting a capture-ready CFB plant to O_2 firing and CO_2 capture as compared to converting a non-capture-ready plant to O_2 firing and CO_2 capture. As such, this work quantifies the potential financial benefits of pre-investing some money into a capture-ready plant in order to facilitate its future conversion to O_2 firing and CO_2 capture.

As mentioned above, in general, when a power plant is converted to O_2 firing and CO_2 capture, although the gross electrical output does not change, there is a significant loss in the net electrical output from the plant. This output loss is primarily due to the power consumption requirements of the air separation unit (ASU) and the gas processing system (GPS). These systems typically consume a total of about 25-30 percent of the generator electrical output.

The retrofit of CFB boiler steam plants (both capture-ready and non capture-ready) to oxygen firing and CO_2 capture causes several significant impacts on the overall plant performance, CO_2 emissions, and cost of electricity as compared to the air fired Base Case. The net plant output for the non capture-ready plant is reduced from 637 to 476 MWe, a 25 percent reduction. Conversely, the net plant output for the capture-ready plant is maintained. The plant thermal efficiency (HHV basis) is reduced by about 10 percentage points (from about 38

% to 28%) for both capture-ready and non capture-ready retrofits. Specific CO_2 emissions are reduced more than 92 percent from 0.82 to 0.07 kg/kWh (1.82 to 0.15 lbm/kWh) for both capture-ready and non capture-ready retrofits.

Retrofitting the capture-ready and non capture-ready CFB plants to oxygen firing capability and CO_2 capture is technically straightforward.

The **non capture-ready CFB plant** requires relatively minor modifications. Boiler island modifications include a new flue gas recirculation system, new oxygen supply piping, a new oxygen heater, new CO_2 product ductwork to the new gas processing system, the addition of a new SO_2 removal system (Flash Dryer Absorber), and associated new controls and instrumentation for these systems. Pressure part changes to the existing boiler are not required.

Relatively minor changes to the balance of plant are required such as modifications to the feedwater system to include low-level heat recovery from the ASU and GPS, and additional accessory electrical equipment to support the added ASU and GPS.

The **capture-ready CFB plant**, which is designed to maintain the original net plant electrical output after the conversion, requires significantly more modifications than the non capture-ready plant. Boiler island modifications, in addition to those mentioned above for the non-capture ready retrofit, include several pressure part changes to accommodate the increase in steam generation rate. Wingwalls are added to the combustor, economizer surface is added in the rear pass, and superheat and reheat surface is added in the external heat exchangers.

The modifications to the balance of plant include steam turbine/generator modifications to accommodate the increased steam flow, as well as modifications to various other BOP systems such as the feedwater system, the cooling water system, the ash handling system, and the accessory electrical system.

The major new systems required for retrofit of both capture-ready and non capture-ready plants are a cryogenic air separation unit (ASU), a gas processing system (GPS), and the addition of an FDA system for sulfur removal. The ASU and GPS have significant land area requirements for the location of new equipment.

The **non capture-ready plant retrofit cost** (EPC basis – May 2007 $US) is estimated to be about 969 $/kW-new, based on the new power output (i.e. the total retrofit cost divided by the new net output). There is also a specific cost impact ($/kW-new) associated with the value of the existing plant equipment. Because the retrofitted plant produces less net output, the specific cost of the existing plant equipment is increased. If this is included, the total non capture-ready plant retrofit cost is estimated to be about 1,425 $/kW-new.

Modifications to the existing boiler are relatively minor as mentioned above and cost only about 6 $/kW-new. The new Flash Dryer Absorber SO_2 removal system costs 118 $/kW-new. The remaining costs - nearly 78% of the total retrofit cost - are for the cryogenic air separation and gas processing systems. Though costly, these systems are commercially proven and technically straightforward.

The **capture-ready plant retrofit cost** is estimated to be about 961 $/kW-new, based on the new power output (i.e. the total retrofit cost divided by the new net output). In this case, there is no retrofit cost associated with the value of the existing plant equipment (as there was for the non capture ready retrofit) because the plant still produces the same net output as it did before the retrofit.

Modifications to the existing boiler are more extensive, as mentioned above, and cost about 27 $/kW-new or about 3% of the total plant retrofit cost. The new Flash Dryer Absorber SO_2

removal system costs 90 $/kW-new or about 9% of the total. BOP modifications, including the steam turbine/generator modifications, amount to about 16% of the total. The remaining costs - about 72% of the total - are for the cryogenic air separation unit and gas processing system.

A comparison of the total power plant costs for Cases 1a and 2a shows that the capture ready design requires a relatively small pre-investment of about 4.5 percent. This pre-investment cost is provided for the future conversion of the plant to oxygen firing and CO_2 capture, and to also allow an increase in the gross electrical output from the plant of about 32 percent when the plant is retrofitted with oxygen firing and CO_2 capture (i.e., from Case 2a to Case 2b) such that the net electrical output is not decreased.

Hence, the purpose of the economic analysis was to determine whether or not this pre-investment cost is justified economically, by comparing the results from Case 2b with those from Case 1b (Capture unready converted to O_2 firing and CO_2 capture). These Results are summarized below:

- The levelized cost of electricity (LCOE) of the capture unready plant (Case 1b) is always higher than that of the capture ready plant (Case 2b), irrespective of the time of conversion to O_2 firing and CO_2 capture, up to 20 years.
- The differences between the LCOE's of these two plants get narrower with time of conversion, ultimately crossing at 20-year mark
- In the absence of conversion to O_2 firing and CO_2 capture, the LCOE of the capture ready plant (2a) is higher than that of capture unready (1a), due its additional pre-investment cost
- The relative net present value (NPV) between the Capture Ready and Capture Unready plants decreases with time of conversion to O_2 firing and CO_2 capture, consistent with the LCOE differences
- In the absence of conversion to O_2 firing and CO_2 capture, the NPV of the capture ready plant (2a) is -$42M relative to Capture Unready plant (1a), due its additional pre-investment cost
- Hence, the pre-investment cost is justified, provided that the plant conversion to O_2 firing and CO_2 capture is implemented within 20 years from initial operation. The earlier the conversion, the better based on both LCOE and NPV results
- The value of pre-investment cost disappears if the conversion to O_2 firing and CO_2 capture is implemented after 20 years from initial operation.

TABLE OF CONTENTS

1 INTRODUCTION 21

2 DESIGN BASIS FOR POWER PLANTS 23
2.1.1 Common Parameters: 23
2.1.2 Plant Site Definition: 23
2.1.3 Plant Equipment Scope: 24
2.1.4 Plant Ambient Design Conditions: 25
2.1.5 Consumables: 26
2.1.6 CO_2 Product Specification: 26
2.1.7 Structures and Foundations: 27

3 DESCRIPTION OF POWER PLANT CASE STUDIES AND PLANT PERFORMANCE SUMMARY 28

3.1 Power Plant Case Studies 28
3.1.1 Case 1a – Air Fired CO_2 Capture Unready Power Plant - Base Case 28
3.1.2 Case 1b – The Base Case Power Plant Retrofit with O_2 Firing and CO_2 Capture . 28
3.1.3 Case 2a - Air Fired CO_2 Capture-Ready Power Plant 28
3.1.4 Case 2b - The Case 2a Capture-Ready Power Plant Retrofit with O_2 Firing and CO_2 Capture 29

3.2 Power Plant Performance Summary and Comparison 29
3.2.1 Boiler Efficiency: 32
3.2.2 Coal Heat Input and Boiler Heat Output: 32
3.2.3 Steam Cycle Efficiency: 33
3.2.4 Total Plant Auxiliary Power: 33
3.2.5 Net Plant Power Output: 34
3.2.6 Plant Thermal Efficiency: 35
3.2.7 Plant CO_2 Emissions: 36
3.2.8 Criteria Emissions 28

4 CFB BOILER DESIGN AND PERFORMANCE 38

4.1 Water/Steam Flow Path 38

4.2 Case 1a - Air Fired CFB Boiler Island (Base Case) 38
4.2.1 Process Description: 38
4.2.2 Material and Energy Balance: 39
4.2.3 Coal Feeding System: 40
4.2.4 Bottom Ash Removal System: 40
4.2.5 Air Preheaters: 41

4.3 Case 1b - The Case 1a CFB Boiler Island Retrofit with O_2 Firing and CO_2 Capture 41
4.3.1 Process Description: 41
4.3.2 Material and Energy Balance: 42
4.3.3 Boiler Island Modifications: 45

4.3.3.1 Boiler Modifications: ... 45
4.3.3.2 Modified Draft System: ... 45
4.3.3.3 Modified Controls and Instrumentation for the Boiler Island: ... 46
4.3.3.4 Modified Desulfurization System: ... 46
4.3.3.5 Coal Feeding System: ... 47
4.3.3.6 Bottom Ash Removal System: ... 47
4.3.3.7 Major New Equipment Added: ... 47

4.4 Case 2a - Air Fired Capture Ready CFB Boiler Island ... 48
4.4.1 Process Description: ... 48
4.4.2 Material and Energy Balance: ... 48
4.4.3 Capture Ready Features for the Case 2a Boiler Island ... 49
4.4.3.1 Coal Feeding System: ... 50
4.4.3.2 Bottom Ash Removal System: ... 50
4.4.3.3 Air Preheaters: ... 51
4.4.3.4 Draft System: ... 51

4.5 Case 2b – The Case 2a Capture Ready CFB Boiler Island Retrofit with O_2 firing and CO_2 Capture ... 51
4.5.1 Process Description: ... 51
4.5.2 Material and Energy Balance: ... 52
4.5.3 Boiler Island Modifications: ... 55
4.5.3.1 Boiler Modifications: ... 55
4.5.3.2 Coal Feeding System: ... 57
4.5.3.3 Bottom Ash Removal System: ... 57
4.5.3.4 Air Preheaters: ... 58
4.5.3.5 Modified Draft System: ... 58
4.5.3.6 Modified Controls and Instrumentation for the Boiler Island: ... 59
4.5.3.7 Modified Desulfurization System: ... 59
4.5.3.8 Major New Equipment Added: ... 59

5 STEAM TURBINE DESIGN AND PERFORMANCE ... 60

5.1 Capture Ready Steam Turbine ... 60

5.2 Capture Ready Converted Steam Turbine ... 60
5.2.1 HP Inner Block Retrofit ... 60

5.3 Steam Turbine/Generator Layout Drawings ... 62

5.4 Steam Turbine Heat Balances ... 62

6 BALANCE OF PLANT DESIGN AND PERFORMANCE ... 66

6.1 Air Separation Unit ... 66

6.2 Gas Processing System ... 67

6.3 Coal Handling System ... 68

6.4 Sorbent Handling System 71
6.4.1 Limestone Handling 71
6.4.2 Lime Handling 72

6.5 Ash Handling System 73
6.5.1 Bed Ash 73
6.5.2 Fly Ash 74

6.6 Supercritical Steam Turbine System 74
6.6.1 Condensate System 75
6.6.2 Feedwater System 75
6.6.3 Main and Reheat Steam System 76
6.6.4 Extraction Steam System 76

6.7 Circulating Water System 77

6.8 Makeup Water Treatment System 77

6.9 Ducting and Stack 78

6.10 Wastewater Treatment System 78

6.11 Miscellaneous Systems 78

6.12 Buildings and Structures 78

6.13 Accessory Electric Plant 79

6.14 Instrumentation and Control 79

6.15 Balance of Plant Auxiliary Loads 79

6.16 General Arrangement 80

7 COST ESTIMATES 81

7.1 Investment Cost Basis: 81

7.2 Operating and Maintenance Costs Basis: 83
7.2.1 Operating Labor Cost Basis: 83
7.2.2 Consumable Costs Basis: 84

7.3 Total Plant Investment Costs: 84
7.3.1 BOP Cost and Scope Differences Between the Cases 87
7.3.2 Incremental Specific Investment Cost ($/kWe-net) for Case 2b: 91

7.4 Operating and Maintenance Costs 91

8 ECONOMIC ANALYSIS 92

9 BIBLIOGRAPHY 97

10 APPENDICIES 98

10.1 Appendix I - Drawings 99
10.1.1 CFB Boiler Drawings 99
10.1.2 Steam Turbine Drawings 112
10.1.3 Plant Layout Drawings 116

10.2 Appendix II - Equipment Lists 120
10.2.1 Base Case (Case 1a) 120
10.2.2 Capture Ready Case (Case 2a) 127
10.2.3 Capture Ready Converted to Oxygen Firing (Case 2b) 134

10.3 Appendix III - Detailed Balance of Plant Cost Breakdowns 137

LIST OF FIGURES

Figure 3-1: Boiler Efficiency Comparison 32
Figure 3-2: Coal Heat Input and Boiler Heat Output Comparison 33
Figure 3-3: Steam Cycle Efficiency Comparison 33
Figure 3-4: Auxiliary Power Comparison between Air-Fired and Oxy-fuel Fired CFB Plants 34
Figure 3-5: Net Plant Electrical Output Comparison 35
Figure 3-6: Plant Thermal Efficiency Comparison 35
Figure 3-7: Plant CO_2 Emission Comparison 36
Figure 3-8: Avoided CO_2 Emission Comparison 37
Figure 4-1: Case 1a (Base Case) Air Fired CFB Boiler Island 39
Figure 4-2: Case 1b - CFB Boiler Retrofit with O_2 Firing and CO_2 Capture 42
Figure 4-3: Flash Dryer Absorber (FDA) System Schematic Diagram (simplified) 47
Figure 4-4: Case 2a Capture Ready Air Fired CFB Boiler Island 48
Figure 4-5: Case 2b –Capture Ready CFB Boiler (Case 2a) Retrofit with O_2 Firing and CO_2 Capture 52
Figure 4-6: Case 2b - Sectional Side Elevation of the Capture Ready Converted CFB Boiler Showing the Wing Wall Surface Added in the Furnace and the Economizer Surface Added in the Backpass 56
Figure 4-7: Case 2b – Plan View Showing Modified External Fluidized Bed Heat Exchangers 57
Figure 4-8: Case 2b – Section View Showing the Added Tubular Oxygen Heater and its Associated Ductwork 58
Figure 5-1: Typical HP Inner Block Retrofit Cross Section 61
Figure 5-2: HP Inner Block Retrofit Illustrating "Drop In Solution" 62
Figure 5-3: Case 1a (Base Case) Turbine Heat Balance Diagram 63
Figure 5-4: Case 2a Capture Ready Turbine Heat Balance Diagram 64
Figure 5-5: Case 2b Capture Ready Converted Turbine Heat Balance Diagram 65
Figure 6-1: ASU Schematic with Two Reboilers 67
Figure 6-2: Depiction of Typical Coal handling System 69
Figure 7-1: Power Plant Investment Costs (EPC Basis) 86
Figure 8-1: Levelized cost of Electricity Comparison 94
Figure 8-2: Relative Net Present Value Comparisons 95
Figure 10-1: Cases 1a, 1b, 2a Steam Turbine/Generator Layout Plan Drawing (operating floor – el 1188') 113
Figure 10-2: Cases 1a, 1b, 2a Steam Turbine/Generator Layout Plan Drawings (floor el. 1,146' / 1,124') 114
Figure 10-3: Case 2b Capture Ready Converted Generator General Arrangement Drawing .. 115
Figure 10-4: Case 1a (Base Case) Air Blown CFB Steam Plant (Not Capture Ready) Layout117
Figure 10-5: Case 2a Air Blown Capture Ready CFB Steam Plant Layout 119
Figure 10-6:Case 2b Oxygen Blown CFB Steam Plant Layout with CO_2 Capture 119

LIST OF TABLES

Table 2-1: Makeup Water Characteristics 24
Table 2-2: Site Characteristics for all Material and Energy Balances 25
Table 2-3: Ambient Air Quality 25
Table 2-4: Design Coal Analysis (Medium Volatile Bituminous) 26
Table 2-5: Design Limestone Analysis 26
Table 2-6: Dakota Gasification Project's CO_2 Product Specification for EOR 27
Table 3-1: Plant Performance and CO_2 Emissions Summary and Comparison 30
Table 3-2: Comparison of Plant Auxiliary Power Requirements 31
Table 4-1: Case 1a Boiler Island Material and Energy Balance (Base Case) 40
Table 4-2: Case 1b Boiler Island Material and Energy Balance (Base Case Retrofit with Oxygen firing and CO_2 Capture) 43
Table 4-3: Case 2a Boiler Island Material and Energy Balance (CO_2 Capture Ready) 49
Table 4-4: Case 2b Boiler Island Material and Energy Balance (Capture Ready CFB Retrofit with Oxygen Firing and CO_2 Capture) 53
Table 5-1: Summary of Steam Flows, Pressures and Generator Outputs 62
Table 6-1: ASU Oxygen Production and Purity 67
Table 6-2: Dakota Gasification Project's CO_2 Specification for EOR and the Calculated Product Stream Purity 68
Table 6-3: Design Coal 70
Table 6-4: Required Coal Size Distribution 70
Table 6-5: Coal Handling System Design Basis 71
Table 6-6: Limestone Analysis 72
Table 6-7: Required Limestone Size Distribution 72
Table 6-8: Bed Ash System Design Basis 73
Table 6-9: Fly Ash Handling System Design Basis 74
Table 6-10: Condensate System Sizing Criteria 75
Table 6-11: Plant Voltage Distribution 79
Table 6-12: Balance of Plant Auxiliary Loads 80
Table 7-1: Operating Labor Requirements 83
Table 7-2: Total Plant Investment Cost Summary (EPC basis) 84
Table 7-3: BOP Cost and Scope Differences Between the Cases 88
Table 7-4: Operating and Maintenance Cost Summary 91
Table 8-1: Common Economic Parameters 92
Table 8-2: Case Specific Economic Parameters 93
Table 8-3: Economic Comparison of Capture Ready and Capture Unready Plants 93
Table 10-1: Detailed BOP Costs for Case 1a (Base Case) 137
Table 10-2: BOP Costs for Case 1b (Base Case Power Plant Retrofit to O_2 Firing and CO_2 Capture) 141
Table 10-3: Detailed BOP Costs for Case 2a (Capture Ready Power Plant) 142
Table 10-4: Detailed BOP Costs for Case 2b (Capture Ready Power Plant Retrofit to O_2 Firing and CO_2 Capture) 146

LIST OF ACRONYMS AND ABBREVIATIONS

ABMA	American Boiler Manufacturers Association
ACFM	Actual cubic feet per minute
ACMM	Actual cubic meters per minute
ANSI	American National Standards Institute
ASME	American Society of Mechanical Engineers
ASU	Air Separation Unit
Bara	Bar, absolute
Barg	Bar, gauge
BI	Boiler Island
BFP	Boiler Feedwater Pump
BOP	Balance of Plant
Btu	British Thermal Unit
CFB	Circulating Fluidized Bed
CFM	Cubic Feet per Minute
CHL	Carbon Heat Loss
CMM	Cubic Meters per Minute
CO_2	Carbon Dioxide
COE	Cost of Electricity
CP	Condensate Pump
CS	Carbon Steel
dB	Decibel
DCA	Direct Contact Aftercooler
DCS	Distributed Control System
DGC	Dakota Gasification Company
DOE/NETL	Department of Energy/National Energy Technology Laboratory
EHE	External Heat Exchanger
EOR	Enhanced Oil Recovery
EPC	Engineered, Procured and Constructed (cost basis)
FBC	Fluidized Bed Combustion
FBHE	Fluidized Bed Heat Exchanger
FD	Forced Draft
FDA	Flash Drier Absorber
FGD	Flue Gas Desulfurization
FGR	Flue Gas Recirculation
FF	Fabric Filter
FOM	Fixed Operation & Maintenance
gpm	Gallons per minute
GPS	Gas Processing System
HHV	Higher Heating Value
HP	High Pressure
hp	Horse Power
hr	Hour
ID	Induced Draft
IP	Intermediate Pressure
in. H_2O	Inches of Water
in. Hga	Inches of Mercury, Absolute
kg	Kilogram
kJ	Kilojoule
kV	Kilovolt
kWe	Kilowatts electric
kWh	Kilowatt-hour
lbm	Pound mass
LHV	Lower Heating Value
LMTD	Log Mean Temperature Difference
LP	Low Pressure
lpm	Liters per minute
MAC	Main Air Compressor
MCR	Maximum Continuous Rating
MDEA	Methyl Diethanolamine
MEA	Monoethanolamine
mm H_2O	Millimeters of Water
mm Hga	Millimeters of Mercury, Absolute
MTF	Multi-use Test Facility
MTPD	Metric Tonne Per Day
MTPH	Metric Tonne Per Hour
MWe	Megawatt Electric
MW_{th}	Megawatt Thermal
N_2	Nitrogen Gas
NPHR	Net Plant Heat Rate
O_2	Oxygen Gas
O&M	Operation & Maintenance
P&ID	Process & Instrumentation Diagram
PA	Primary Air
PC	Pulverized Coal
PFD	Process Flow Diagram
PFWH	Parallel Feedwater Heater
PHX	Primary Heat Exchanger
ppm	Parts per million
ppmv	Parts per million (by volume)
ppmw	Parts per million (by weight)
psia	Pound per square inch, absolute
psig	Pound per square inch, gauge
SA	Secondary Air
SNCR	Selective Non Catalytic Reduction
TGA	Thermo-Gravimetric Analysis
TPD	Ton Per Day
TPH	Ton Per Hour
UBC	Unburned Carbon
UCT	Upper Column Turbine
V	Volt
VOC	Volatile Organic Compounds
VOM	Variable Operation & Maintenance

EXECUTIVE SUMMARY

Coal-fired power plants of the future will likely need systems that enable the cost effective capture and sequestration of their CO_2 emissions, since fossil fuels will remain the primary energy source for the foreseeable future. ALSTOM is evaluating several options in the mitigation of greenhouse gases from fossil fuel combustion. One of the potential technologies to accomplish this is oxy-combustion. This study investigated the concept of building a conventional CFB steam plant with provisions for facilitating future conversion to oxygen firing and CO_2 capture.

Burning fossil fuels in mixtures of oxygen and recirculated flue gas (principally CO_2) essentially eliminates the presence of atmospheric nitrogen in the flue gas. The resulting flue gas is comprised primarily of CO_2, along with some moisture, nitrogen, oxygen, and trace gases like SO_2 and NO_X. Oxygen firing in Circulating Fluid Bed Boilers (CFB's) can be done with boilers that are smaller and less costly than their air fired counterparts (Marion, et al. 2003).

Background:

In 2001, ALSTOM Power Inc. (ALSTOM) began a two-phase program to investigate the feasibility of various carbon capture technologies. This program was sponsored under a Cooperative Agreement from the US Department of Energy's National Energy Technology Laboratory (DOE).

The first phase entailed a comprehensive study evaluating the technical feasibility and economics of alternate CO_2 capture technologies applied to Greenfield US coal-fired electric generation power plants. Thirteen cases, representing various levels of technology development, were evaluated. Seven cases represented coal combustion in CFB type equipment. Four cases represented Integrated Gasification Combined Cycle (IGCC) systems. Two cases represented advanced Chemical Looping Combined Cycle systems. Marion, et al. reported the details of this work in 2003.

One of the thirteen cases studied utilized an oxygen-fired circulating fluidized bed (CFB) boiler. In this concept, the fuel is fired with a mixture of oxygen and recirculated flue gas (mainly CO_2) - see schematic below. This combustion process yields a flue gas containing over 80 percent (by volume) CO_2. This flue gas can be processed relatively easily to enrich the CO_2 content to over 96 percent for use in enhanced oil or gas recovery (EOR or EGR) or simply dried for sequestration.

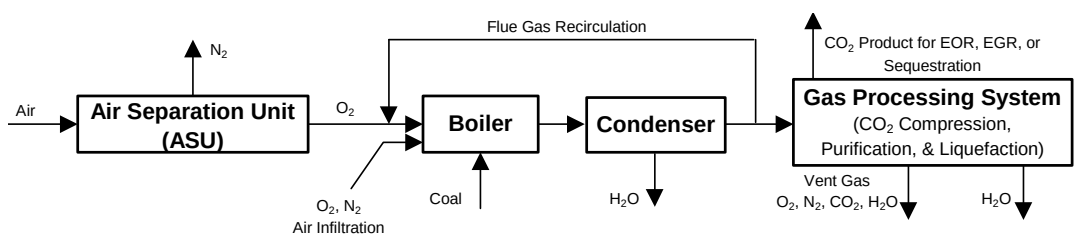

The Phase I study identified the O_2-fired CFB as having a near term development potential, because it uses conventional commercial CFB technology and commercially available CO_2 capture enabling technologies such as cryogenic air separation and simple rectification or distillation gas processing systems. In the long term, air separation technology advancements offer significant reductions in power requirements, which would improve plant efficiency and economics for the oxygen-fired technology.

The second phase consisted of pilot-scale testing followed by a refined performance and

economic evaluation of the O_2 fired CFB concept. As a part of this workscope, ALSTOM modified its 3 MW_{th} (9.9 MM-Btu/hr) Multiuse Test Facility (MTF) pilot plant to operate with O_2/CO_2 mixtures of up to 70 percent O_2 by volume. Tests were conducted with coal and petroleum coke. The test objectives were to determine the impacts of oxygen firing on heat transfer, bed dynamics, potential agglomeration, and gaseous and particulate emissions. The test data results were used to refine the design, performance, costs, and economic models developed in Phase-I for the O_2-fired CFB with CO_2 capture. Nsakala, Liljedahl, and Turek reported results from this study in 2004.

At that time ALSTOM identified several items needing further investigation in preparation for large-scale demonstration of the oxygen-fired CFB concept, namely:

- Operation and performance of the moving bed heat exchanger (MBHE) to avoid recarbonation and also for cost savings compared to the standard bubbling fluid bed heat exchanger (FBHE).
- Performance of the back-end flash dryer absorber (FDA) for sulfur capture under high CO_2 / high moisture flue gas environment using calcined limestone in the fly ash and using fresh commercial lime directly in the FDA.
- Determination of the effect of recarbonation on fouling in the convective pass.
- Assessment of the impact of oxygen firing on the mercury, other trace elements, and volatile organic compound (VOC) emissions.
- Develop a proposal-level oxygen-fired retrofit design for a relatively small existing CFB steam power plant in preparation for a large-scale demonstration of the O_2 fired CFB concept.

Hence, ALSTOM responded to a DOE Solicitation to address all these issues with further O_2 fired MTF pilot testing and a subsequent retrofit design study of oxygen firing and CO_2 capture on an existing air-fired CFB plant. ALSTOM received a contract award from the DOE to conduct a project entitled "Commercialization Development of Oxygen Fired CFB for Greenhouse Gas Control," under Cooperative Agreement DE-FC26-04NT42205. The results from this effort are reported in Volume-I of this report.

During Phases I-III, ALSTOM also identified a need to investigate the design of the CO_2 capture ready oxygen-fired CFB power plant concept, which is the subject of this report as discussed herein.

CO_2 Capture Ready Study Results Summary:

The purpose of this study is to quantitatively determine the attributes of designing supercritical (SC) circulating fluidized bed (CFB) power plants (600 MW class) that are CO_2 capture-ready via future oxygen firing. The retrofit of traditionally designed steam power plants for CO_2 capture has been shown to reduce plant output significantly, be very energy intensive, costly, and quite often not enough site space is available for optimally installing the CO_2 capture equipment. This work identifies the impacts on overall plant performance, costs, and economics of converting a capture-ready CFB plant to O_2 firing and CO_2 capture as compared to converting a non-capture-ready CFB plant to O_2 firing and CO_2 capture. As such, this work quantifies the potential financial benefits of pre-investing some money into a capture-ready plant in order to facilitate its future conversion to O_2 firing and CO_2 capture.

As mentioned above, in general, when a power plant is converted to O_2 firing and CO_2 capture, although the gross electrical output does not change, there is a significant loss in the net electrical output from the plant. This output loss is primarily due to the power consumption

requirements of the air separation unit (ASU) and the gas processing system (GPS). These systems typically consume a total of about 25-30 percent of the generator electrical output.

This study investigates the feasibility of designing capture-ready CFB based power plants with additional provisions (other than just adding the ASU and GPS for CO_2 capture) such that additional modifications can be made at the time the plant is converted to O_2 firing and CO_2 capture to allow the net power output from the plant to be conserved.

Plant Performance:

The retrofit of CFB boiler steam plants (both capture-ready and non capture-ready) to oxygen firing and CO_2 capture causes several significant impacts on the overall plant performance, CO_2 emissions, and cost of electricity as compared to the air fired Base Case. The net plant output for the non capture-ready plant is reduced from 637 to 476 MWe, a 25 percent reduction whereas the net plant output for the capture-ready plant is maintained. The plant thermal efficiency (HHV basis) is reduced by about 10 percentage points (from about 38 % to 28%) for both capture-ready and non capture-ready retrofits. Specific CO_2 emissions are reduced more than 92 percent from 0.82 to 0.07 kg/kWh (1.82 to 0.15 lbm/kWh) for both capture-ready and non capture-ready retrofits.

Plant Modifications:

Retrofitting the capture-ready and non capture-ready CFB plants to oxygen firing capability and CO_2 capture is technically straightforward.

The **non capture-ready CFB plant** requires relatively minor modifications to the existing equipment. Boiler island modifications include a new flue gas recirculation system, new oxygen supply piping, a new oxygen heater, new CO_2 product ductwork feeding the new gas processing system, the addition of a new SO_2 removal system (Flash Dryer Absorber), and associated new controls and instrumentation for these systems. Pressure part changes to the existing boiler are not required.

Relatively minor changes to the balance of plant are required such as modifications to the feedwater system to include low-level heat recovery from the ASU and GPS, and additional accessory electrical equipment to support the added ASU and GPS.

The **capture-ready CFB plant**, which is designed to maintain the original net plant electrical output after the conversion, requires significantly more modifications than the non capture-ready plant. Boiler island modifications, in addition to those mentioned above for the non-capture ready retrofit, include several pressure part changes to accommodate the increase in steam generation rate. Wingwalls are added to the combustor, economizer surface is added in the rear pass, and superheat and reheat surface is added in the external heat exchangers.

The modifications to the balance of plant include steam turbine/generator modifications to accommodate the increased steam flow, as well as modifications to various other BOP systems such as the feedwater system, the cooling water system, the ash handling system, and the accessory electrical system.

The major new systems required for retrofit of both capture-ready and non capture-ready plants are a cryogenic air separation unit (ASU), a gas processing system (GPS), and the addition of an FDA system for sulfur removal. The ASU and GPS have significant land area requirements for the location of new equipment.

The following tables and lists further summarize the capture ready design provisions and the actual retrofit modifications required for the plants.

Table ES-1 identifies with respect to the Boiler Island:

- The design provisions made for the Capture-Ready plant (Case 2a) in anticipation of increased steam flow after conversion of this plant to O_2 firing and CO_2 capture
- The design specifications implemented on the Capture-Ready Converted Plant (Case 2b) to accommodate increased steam flow
- Provisions made for future installations of the Air Separation Unit and Gas Processing System in conjunction with Case 2b implementation

ES- 1: Boiler Island Comparison

	Base Case (Case 1a)	**Capture-Unready Converted Ready (Case 1b)**	**Capture-Ready (Case 2a)**	**Capture-Ready Converted (Case 2b)**
Steam Flow:	Per Design	Per Design of Base Case (Case 1a)	1) Steam flow same as Base Case 2) Increase boiler height by ~5 ft and provision for future addition of wing walls 3) Leave sufficient space for future increases in economizer, FBHE, SH, & RH surfaces	Increase steam flow by 38% with following modifications: 1) Install 32 wing walls 2) Add 43% more economizer surface 3) Add 30% more SH & RH surfaces to the FBHE's
Other: ASU, GPS, O_2 heater, Lime feed system for FDA, & Flue gas recirculation system	Not Applicable	Add ASU, GPS, O2 heater, FDA System, Lime feed system for FDA, & Flue gas recirculation system	Leave space for future additions of all the items in column #1	Add ASU, GPS, O2 heater, FDA System, Lime feed system for FDA, & Flue gas recirculation system

Table ES-2 identifies with respect to the Steam Turbine/Generator:

- The design provisions made for the HP, IP & LP turbines of the Capture-Ready plant (Case 2a) in anticipation of increased steam flow after conversion of this plant to O_2 firing and CO_2 capture
- The design specifications implemented on generator of the Capture-Ready Converted Plant (Case 2b) for operation with increased steam flow after conversion to O_2 firing and CO_2 capture

ES- 2: Steam Turbine/Generator Comparison

	Base Case (Case 1a)	**Capture-Unready Converted Ready (Case 1b)**	**Capture-Ready (Case 2a)**	**Capture-Ready Converted (Case 2b)**
HP, IP & LP Turbines	Per Design	Per Design of Base Case (Case 1a)	1) IP & LP turbines capable of swallowing added 38% steam flow 2) HP designed for 100% flow	HP Inner Block Retrofit: 1) New Rotor with Blades & Coupling 2) New Inner Casing & Blades
Generator	Per Design	Per Design of Base Case (Case 1a)	Per Design	32% more output - Install larger generator

Table ES-3 identifies with respect to the Balance of Plant (BOP):

- The design provisions made/design specifications implemented on the Capture-Ready Plant (Case 2a) and Capture-Ready Converted Plant (2b) in anticipation of higher solids handling capacities, more feedwater and cooling water capacities after conversion to O_2 firing and CO_2 capture
- The design provisions made/design specifications implemented on the Capture-Ready Plant (Case 2a) and Capture-Ready Converted Plant (2b) in anticipation of higher demand of electrical accessories after conversion to O_2 firing and CO_2 capture.

ES- 3: BOP Comparison

	Base Case (Case 1a)		**Capture-Ready (Case 2a)**	**Capture-Ready Converted (Case 2b)**
Solids Handling	Per Design	Per Design of Base Case (Case 1a)	All, except lime handling system for FDA, same as Base Case	1) Coal (increase operation 33%, i.e., from 10- to 15-8 hour shifts per week) 2) Limestone not in use in converted plant 3) Lime system added for FDA 4) Ash (increase operation by 40%)
Feedwater System	Per Design	Add low level heat integration between ASU, GPS, and LP feed water	De-aerator, BFP, HP-FWH's capacities 38% larger	Add low level heat integration between ASU, GPS, and LP feed water
Cooling Water System & Condenser	Per Design	Per Design of Base Case (Case 1a)	1) Leave space for future circulating water pump, and cooling tower. 2) Larger condenser (+50% capacity)	Add circulating water pump, and cooling tower (~50% increase in capacity)
Accessory Electric Plant	Per Design	Add transformers & switchgear for ASU, & GPS	Leave space for future additions of transformers & switchgear for ASU, & GPS	Add transformers & switchgear for ASU, & GPS

Plant Costs:

The **non capture-ready plant retrofit cost** (EPC basis – May 2007 $US) is estimated to be about 969 $/kW-new, based on the new power output (i.e. the total retrofit cost divided by the new net output). There is also a specific cost impact ($/kW-new) associated with the value of the existing plant equipment. Because the retrofitted plant produces less net output, the specific cost of the existing plant equipment is increased. If this is included, the total non capture-ready plant retrofit cost is estimated to be about 1,425 $/kW-new.

Modifications to the existing boiler are relatively minor as mentioned above and cost only about 6 $/kW-new. The new Flash Dryer Absorber SO_2 removal system costs 118 $/kW-new. The remaining costs - nearly 78% of the total retrofit cost - are for the cryogenic air separation and gas processing systems. Though costly, these systems are commercially proven and technically straightforward.

The **capture-ready plant retrofit cost** is estimated to be about 961 $/kW-new, based on the new power output (i.e. the total retrofit cost divided by the new net output). In this case, there is no retrofit cost associated with the value of the existing plant equipment (as there was for the

non capture ready retrofit) because the plant still produces the same net output as it did before the retrofit.

Modifications to the existing boiler are more extensive, as mentioned above, and cost about 27 $/kW-new or about 3% of the total plant retrofit cost. The new Flash Dryer Absorber SO_2 removal system costs 90 $/kW-new or about 9% of the total. BOP modifications, including the steam turbine/generator modifications, amount to about 16% of the total. The remaining costs - about 72% of the total - are for the cryogenic air separation unit and gas processing system.

ES- 4: Investment Cost Comparison (EPC Basis)

Acct	Total Plant Cost Summary	Case 1a		Case 1b		Case 2a		Case 2b	
No.	Item/Description	$ x 1000	$/kW	$ x 1000	$/kW	$ x 1000	$/kW	$ x 1000	$/kW
1	COAL & SORBENT HANDLING	41,010	65	44,451	94	41,010	64	44,451	72
2	COAL & SORBENT PREP & FEED	16,807	26	16,807	35	16,807	26	16,807	27
3	FEEDWATER & MISC. BOP SYSTEMS	74,155	117	80,267	169	86,626	136	92,738	149
4	CFB BOILER & ACCESSORIES	350,175	551	353,236	743	356,036	560	372,825	601
4a	Air Separation Unit	n/a	n/a	226,005	476	n/a	n/a	278,730	449
5	FLUE GAS CLEANUP	53,068	83	109,068	230	53,068	83	109,068	176
5a	CO2 Processing System (Purif, Compr, Liquef)	n/a	n/a	130,916	276	n/a	n/a	148,004	239
6	COMBUSTION TURBINE/ACCESSORIES	n/a	n/a	n/a	n/a	n/a	n/a	n/a	n/a
7	HRSG, DUCTING & STACK	34,983	55	34,983	74	34,983	55	38,866	63
8	STEAM TURBINE GENERATOR / PIPING	107,981	170	108,273	228	119,104	187	151,895	245
9	COOLING WATER SYSTEM	28,767	45	30,540	64	30,732	48	38,422	62
10	ASH/SPENT SORBENT HANDLING SYS	18,723	29	18,723	39	18,723	29	22,033	36
11	ACCESSORY ELECTRIC PLANT	33,588	53	55,655	117	33,588	53	62,240	100
12	INSTRUMENTATION & CONTROL	24,399	38	29,423	62	24,399	38	29,423	47
13	IMPROVEMENTS TO SITE	12,785	20	15,268	32	12,785	20	15,268	25
14	BUILDINGS & STRUCTURES	61,691	97	64,939	137	69,221	109	72,469	117
	TOTAL COST	**858,132**	**1,350**	**1,318,554**	**2,775**	**897,081**	**1,410**	**1,493,238**	**2,406**

Economics:

A comparison of the total power plant costs (EPC basis) for Cases 1a and 2a shows that the capture ready design requires a relatively small pre-investment of about 4.5 percent (~60$/kW). This pre-investment cost is provided for the future conversion of the plant to oxygen firing and CO_2 capture, and to also allow an increase in the gross electrical output from the plant of about 32 percent when the plant is retrofitted with oxygen firing and CO_2 capture (i.e., from Case 2a to Case 2b) such that the net electrical output is not decreased.

Hence, the purpose of the economic analysis was to determine whether or not this pre-investment cost is justified economically, by comparing the results from Case 2b with those from Case 1b (Capture unready converted to O_2 firing and CO_2 capture). These results are summarized below:

- The levelized cost of electricity (LCOE) of the capture unready plant (Case 1b) is always higher than that of the capture ready plant (Case 2b), irrespective of the time of conversion to O_2 firing and CO_2 capture, up to 20 years.
- The differences between the LCOE's of these two plants get narrower with time of conversion, ultimately crossing at 20-year mark
- In the absence of conversion to O_2 firing and CO_2 capture, the LCOE of the capture ready plant (2a) is higher than that of capture unready (1a), due its additional pre-investment cost
- The relative net present value (NPV) between the Capture Ready and Capture Unready plants decreases with time of conversion to O_2 firing and CO_2 capture, consistent with the LCOE differences as shown in Figure ES-1.
- In the absence of conversion to O_2 firing and CO_2 capture, the NPV of the capture ready plant (2a) is -$42M relative to Capture Unready plant (1a), due its additional pre-investment cost

- Hence, the pre-investment cost is justified, provided that the plant conversion to O_2 firing and CO_2 capture is implemented within 20 years from initial operation. The earlier the conversion, the better based on both LCOE and NPV results
- The value of pre-investment cost disappears if the conversion to O_2 firing and CO_2 capture is implemented after 20 years from initial operation.

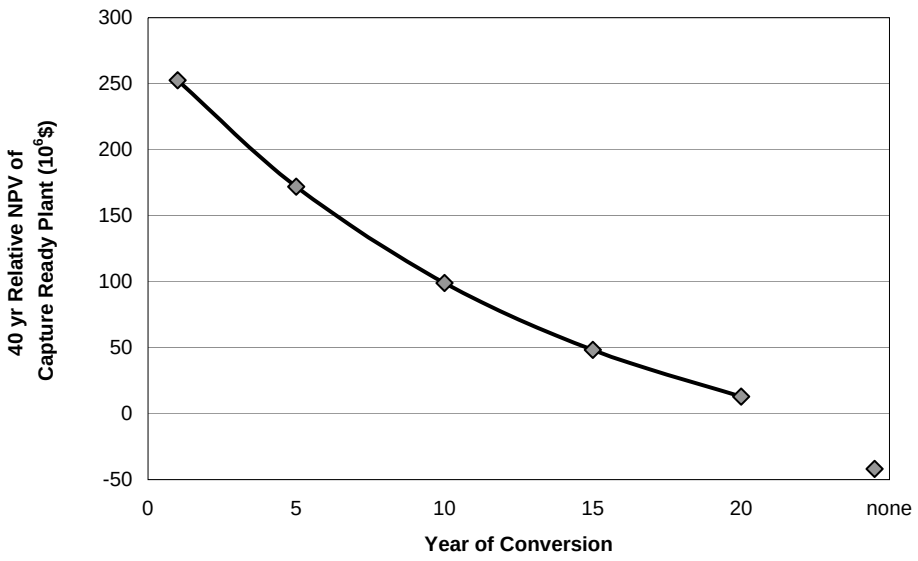

Figure ES-1: Relative Net Present Value Comparisons

1 INTRODUCTION

Electric utility companies planning today to add coal-fired power generation capacity may be hesitant to add steam power plants (PC or CFB), because such assets may be perceived to become disadvantaged economically if CO_2 emissions control legislation should be implemented in the future. This is true particularly if these assets were designed in the traditional manner. Hence, the term "Capture-ready plant" has become a popular vocabulary in the industry, as it offers the opportunity to modify traditional steam plant designs to enable future retrofits to CO_2 capture with significantly reduced cost, reduced energy penalty, improved economics, and with sufficient areas left available on site for optimum location of the CO_2 capture equipment.

This work facet is designed to quantitatively determine the attributes of designing supercritical (SC) circulating fluidized bed (CFB) power plants that are CO_2 capture-ready via future oxygen firing. The retrofit of traditionally designed steam power plants for CO_2 capture has been shown to reduce plant output significantly, be very energy intensive, costly, and quite often not enough site space is available for optimally installing the CO_2 capture equipment. This work compares the impacts on overall plant performance, costs, and economics of converting a capture-ready CFB plant to O_2 firing and CO_2 capture vs. converting a non-capture-ready plant to O_2 firing and CO_2 capture. As such, this work quantifies the potential financial benefits of pre-investing some money into a capture-ready plant in order to facilitate its future conversion to O_2 firing and CO_2 capture.

An added advantage of the CFB technology, compared to the PC technology, is that it is relatively easy to enhance the capture-ready retrofit of CFB plants with O_2 firing and CO_2 capture such that the original net electrical output of the plant is maintained after conversion. This allows the utility to not be concerned with purchasing replacement power for the lost net electrical output, which would typically occur.

Background

A recent study by IEA (Dillon et. al., 2005) has shown that removal of 91% of the CO_2 from a new, state-of-the-art supercritical PC power plant via O_2 firing would raise the price of electricity by 2.4 cents per kWh and reduce the output by 21%. The study by ALSTOM (Marion, et. al., 2003) showed that removal of 94% of the CO_2 from a new sub-critical CFB power plant via O_2 firing would raise the price of electricity by 3.4 cents per kWh and reduce the output by 28%.

The work conducted prior to this particular work facet entailed pilot-scale testing at ~3 MWth and a retrofit design study of oxygen firing and CO_2 capture on an existing 90-MWe CFB. Results from these studies are presented in Volume I of this report.

Concept

The CO_2 capture-ready concept entailed designing a steam power plant without CO_2 capture equipment but with design provisions for a future CO_2 capture retrofit. The CO_2 capture ready concept investigated was an oxygen-fired supercritical CFB power plant.

Objectives

The objectives were four-fold as follows, i.e., determine the plant performance, CO_2 emissions, costs and economics of: (1) Base Case- non-capture-ready traditional steam power plant; (2) Base Case plant (non-capture-ready) retrofitted to O_2 firing and CO_2 capture; (3) CO_2 capture-ready steam plant; and (4) Capture-ready steam plant retrofitted to O_2 firing and CO_2 capture.

Targets for Capture-Ready Plant

(1) Before retrofit, good economics and minimum extra cost (for capture-ready capability) with maximum future flexibility.

(2) After retrofit, maintain original net power output, near zero gaseous emissions, reduced energy penalty, and reduced incremental cost of electricity (as compared to non-capture ready retrofit).

Goals

The goals for the four power plants are described in the following list:

(1) High efficiency and low emissions

(2) Minimum efficiency loss (after conversion)

(3) Zero electric revenue loss (net output maintained)

(4) Minimum added investment cost

(5) Minimum outage time for conversion to CO_2 capture

(6) Equivalent plant availability (before and after conversion)

(7) Equivalent dispatch time (before and after conversion)

(8) Low O&M costs

(9) Good Return on Investment (ROI)

Discussion of Maintaining the Original Net Electrical Output

As mentioned above, in general, when a power plant is converted to O_2 firing and CO_2 capture, although the gross electrical output does not change, there is a significant loss in the net electrical output from the plant. This output loss is primarily due to the power consumption requirements of the air separation unit (ASU) and the gas processing system (GPS). These systems typically consume a total of about 25-30 percent of the generator electrical output.

This study investigates the feasibility of designing capture-ready CFB based power plants with additional provisions (other than just adding the ASU and GPS) such that additional modifications can be made at the time the plant is converted to O_2 firing and CO_2 capture to allow the net power output from the plant to be conserved. This is possible with CFB plants by providing the necessary plant modifications to support an increase in the fuel input rate to the unit. The additional fuel input is used for the generation of additional steam flow, which is responsible for an increase in the gross electrical output to offset the power consumption of the ASU and GPS. The increase in the fuel input rate is made possible by increasing the O_2 content of the oxidant stream (recycled flue gas + oxygen) feeding the combustor. In this manner, the superficial gas velocity in the O_2 fired CFB combustor is maintained to be the same value as it was with the original air fired combustor. Additional steam generating surfaces are added to the CFB (at the time of the conversion) to absorb the increased fuel heat input and to generate the additional steam. Other modifications to the steam turbine/generator and other balance of plant equipment are also provided to fully support these modifications.

2 DESIGN BASIS FOR POWER PLANTS

This section describes the basis for plant equipment design and performance calculations for each of the power plants analyzed in this study. All of the plants designed for this conceptual level study, are assumed to be located on a common Greenfield site and are assumed to be operated under common conditions of fuel, sorbent, utility, and environmental standards. This section is intended to define the common parameters, the site conditions, the equipment scope for the cost estimate, and various other items, which will be used as a common design basis for all of these plants.

2.1.1 Common Parameters:

All of the plants were designed for the identical coal and sorbent analyses, ambient conditions, site conditions, etc. such that each case study provides results which are directly comparable, on a common basis, to all other cases analyzed within this work. The ambient conditions used for all material and energy balances were based on the standard American Boiler Manufacturers Association (ABMA) atmospheric conditions (i.e. 80 °F, 14.7 psia, and 60 percent relative humidity). Many other items were common between cases such as the plant site, equipment scope, plant services, etc. as described below.

2.1.2 Plant Site Definition:

The generic plant site, which is common to all study cases, is assumed to be located in the Gulf Coast region of southeastern Texas. The site consists of approximately 300 usable acres within 15 miles of a medium-sized metropolitan area, with a well-established infrastructure capable of supporting the required construction work force. The area immediately surrounding the site has a mixture of agricultural and light industrial uses. The site is served by a river of adequate quantity for use as makeup cooling water with minimal pretreatment and for the receipt of cooling system blowdown discharges.

A railroad line suitable for unit coal trains passes within 2-1/2 miles of the site boundary. A well-developed road network serves the site, capable of carrying AASHTO H-20 S-16 loads and with overhead restriction of not less than 16 feet (Interstate Standard).

The site is on relatively flat land with a maximum difference in elevation within the site of about 30 feet. The topography of the area surrounding the site is rolling hills, with elevations within 2,000 yards not more than 300 feet above the site elevation. The site is within Seismic Zone 1, as defined by the Uniform Building Code. The following list further describes the assumed site characteristics.

- The site is Greenfield with no existing improvements or facilities.
- The site is relatively clear and level with no characteristics that would cause any unusual construction problems.
- The structural strength of the soil is adequate for spread footings (no piling is required) at this site.
- No rock excavation is required on this site.
- An abundant sub-surface water supply is assumed available on this site.

- The characteristics of cooling tower makeup water assumed in the study are presented in Table 2-1. This makeup water quality will allow cooling tower operation with 5 cycles of concentration of dissolved solids in the circulating water.

Table 2-1: Makeup Water Characteristics

Constituent	Formula	Units	Design Value
Calcium	Ca	mg/l	75
Magnesium	Mg	mg/l	16
Potassium	K	mg/l	3
Sodium	Na	mg/l	20
Bicarbonates	HCO_3	mg/l	240
Chlorides	Cl	mg/l	25
Silica	SiO_2	mg/l	4
Sulfates	SO_4	mg/l	58
Nitrate	NO_3	mg/l	7
TDS-Dissolved	TDS	mg/l	460
Total Organic Carbon	TOC	mg/l	3
Temperature		^{0}F	60
pH	pH		8.0

2.1.3 Plant Equipment Scope:

The boundary limit for these plants includes the complete plant facility within the “fence line”. It encompasses all equipment from the coal pile to the bus bar and includes the coal receiving and water supply systems and terminates at the high-voltage side of the main power transformers. For plants with CO_2 capture systems (Case 1b and 2b), the equipment scope does not include the CO_2 pipeline or CO_2 injection well. The scope of supply is further defined by the following list:

- Site preparation and site improvements
- Foundations, buildings, and structures required for all plant equipment and facilities
- General support facilities for administration, maintenance, and storage
- Coal, limestone, and lime receiving, storage, and handling systems
- Boiler Island from coal feed through gas cleanup system including associated solids handling systems
- Power block, including steam turbine, heat rejection, and makeup water systems
- Plant electrical distribution, lighting, and communication systems
- High-voltage electrical system through step-up transformer
- Instruments and controls
- Miscellaneous power plant equipment

The electrical facilities within the plant scope include all switchgear and control equipment,

generator equipment, station service equipment, conduit and cable trays, all wire and cable. It also includes the main power transformer, foundations, and standby equipment.

Additionally, the following utilities are assumed to be available at the site boundary.

- Communication lines
- Electrical power for plant construction
- Potable water and sanitary sewer connections
- Electrical transmission facilities and lines

2.1.4 Plant Ambient Design Conditions:

Table 2-2 lists ambient and other relevant characteristic assumptions for this site. The ambient conditions used for all material and energy balances were based on the standard American Boiler Manufacturers Association (ABMA) atmospheric conditions (i.e. 80°F, 14.7 psia, and 60 percent relative humidity).

Table 2-2: Site Characteristics for all Material and Energy Balances

Design Parameter	Value
Elevation (ft)	500
Design Atmospheric Pressure (psia)	14.7
Design Temperature, dry bulb (^oF)	80
Design Temperature, wet bulb (^oF)	69.6
Design Relative Humidity (percent)	60
Ash Disposal	Off Site
Water Source	River

The ambient air quality is assumed to be consistent with a dry clean air without contaminants as presented in Table 2-3 (Himmelblau, 1974).

Table 2-3: Ambient Air Quality

Impurities	Chemical Formula	Mole %, dry
Nitrogen	N_2	78.08%
Oxygen	O_2	20.95%
Argon	Ar	0.93%
Carbon Dioxide	CO_2	0.03%
	Total	100.00%
Methane	CH_4	~2 ppm
Other		Trace, (Note A)
Dust		< 0.2 mg/Nm3

Note A: It is assumed that total content of C_XH_Y compounds in ambient air does not exceed 9 ppm.

For equipment sizing, the maximum dry bulb temperature is 95°F, and the minimum dry bulb temperature for mechanical design is 20°F.

2.1.5 Consumables:

Table 2-4 shows the design coal analyses (Ultimate and Higher Heating Value) used for all cases. The coal is classified as a medium volatile bituminous coal. Table 2-5 shows the design limestone analysis used in Cases 1a and 2a for sulfur capture within the furnace.

Table 2-4: Design Coal Analysis (Medium Volatile Bituminous)

Constituent	Units	Weight Fraction
O_2		0.0316
N_2		0.0146
H_2O		0.0399
H_2		0.0357
Carbon		0.6205
Sulfur		0.0234
Ash		0.2343
Total		1.0000
HHV Coal	(Btu/lbm)	11,070
	(kJ/kg)	23,132

Table 2-5: Design Limestone Analysis

Constituent	Weight Fraction
$CaCO_3$	0.9830
Moisture	0.0000
Ash	0.0170
Total	1.0000

Additionally, a small quantity of natural gas is used in Cases 1b and 2b for desiccant drying in both the Gas Processing System and Air Separation Unit. For the purpose of this study, the natural gas was assumed to be pure Methane (CH_4) with a higher Heating Value (HHV) of 55,578 kJ/kg (23,896 Btu/lbm). Also for Cases 1b and 2b, lime is used as the sulfur-absorbing compound. In this analysis, the lime analysis is assumed to be pure CaO.

2.1.6 CO_2 Product Specification:

The CO_2 capture systems used for Cases 1b and 2b were designed for a minimum of 94 percent CO_2 capture from the boiler flue gas stream. Table 2-6 shows the Dakota Gasification Project's CO_2 Product Specification achieved for EOR (Dakota, 2005). This purity specification was used as a guideline for the Gas Processing System (GPS) design in this study. It should be understood that product purity specifications for the CO_2 are very dependent on the individual oil field being flooded.

Table 2-6: Dakota Gasification Project's CO_2 Product Specification for EOR

Component	(units)	Value
CO_2	(vol %)	96
H_2S	(vol %)	1
CH_4	(vol %)	0.3
C_2 + HC's	(vol %)	2
CO	(vol %)	---
N_2	(ppm by vol.)	6000
H_2O	(ppm by vol.)	2
O_2	(ppm by vol.)	100
Mercaptans and other Sulfides	(vol %)	0.03

The nitrogen concentration in Table 2-6 is 6,000 ppmv. It should be noted that according to Charles Fox of Kinder Morgan (Fox, 2002), a maximum nitrogen concentration of 4 percent (by volume) would be required to control the minimum miscibility pressure.

The CO_2 product is provided in a liquid state at the plant boundary at 138 barg (2,000 psig).

2.1.7 Structures and Foundations:

Structures are provided to support and permit access to all plant components requiring support to conform to the site criteria. The structure(s) are enclosed if deemed necessary to conform to the environmental conditions.

Foundations are provided for the support structures, pumps, tanks, and other plant components. A soil-bearing load of 5,000 lbm/ft^2 is used for foundation design.

3 DESCRIPTION OF POWER PLANT CASE STUDIES AND PLANT PERFORMANCE SUMMARY

3.1 Power Plant Case Studies

A total of four (4) power plant case studies are included in this analysis. The four plants investigated are all steam power plants utilizing CFB combustors and supercritical pressure steam cycles. The equipment scope for each plant includes the entire power plant from the coal pile through the bus bar. The equipment scope for the plants capturing CO_2 does not include the CO_2 pipeline or the CO_2 injection well. The primary purpose of the study is to investigate the concept of building CO_2 capture ready steam power plants utilizing CFB combustors and to quantify the attributes of such plants as compared to CO_2 capture unready steam plants. Therefore four power plant cases were defined for this study as listed below:

- Case 1a – Air Fired CO_2 Capture Unready Power Plant - Base Case
- Case 1b – The Base Case Power Plant Retrofit with O_2 Firing and CO_2 Capture
- Case 2a - Air Fired CO_2 Capture-Ready Power Plant
- Case 2b - The Case 2a Capture-Ready Power Plant Retrofit with O_2 Firing and CO_2 Capture

The following paragraphs further define these four study cases.

3.1.1 Case 1a – Air Fired CO_2 Capture Unready Power Plant - Base Case

The Base Case (Case 1a) for this project is based on a power plant that utilizes two (2) parallel steam generators feeding a single steam turbine. Each steam generator is designed for a steam capacity of about 2,205,000 lbm/hr (1,000 tonne/h) utilizing an air fired circulating fluidized bed (CFB) process. The two boilers are operated with supercritical steam conditions of approximately 3,600 psi (250 bar) and deliver 1,050°F (560°C) steam temperature to both the high pressure and intermediate pressure sections of a common steam turbine. The design for the Base Case power plant has been developed to comply with this basic technical specification. The Base Case power plant produces a net output of about 637 MWe. No provisions are included in the design of the Base Case power plant for future conversion to CO_2 capture.

3.1.2 Case 1b – The Base Case Power Plant Retrofit with O_2 Firing and CO_2 Capture

When the conversion of Case 1a (Base Case) to oxygen firing and CO_2 capture is made (i.e. Case 1b), the power plant is retrofit with an air separation unit (ASU) to provide substantially pure oxygen to the furnace and a gas processing system (GPS) to further purify and compress the CO_2 product. Modifications to the existing power plant are minimized for this case. After the conversion of Case 1a to oxygen firing and CO_2 capture is made (i.e. Case 1b) the net electrical output from the plant will be reduced significantly due to the power consumption of the ASU and GPS. The Case 1b power plant produces a net output of about 476 MWe or about 75 percent of the Base Case electrical output.

3.1.3 Case 2a - Air Fired CO_2 Capture-Ready Power Plant

The Case 2a power plant is very similar in design to the Case 1a (Base Case) power plant. Two air fired CFB boilers are provided which generate the same amount of steam at the same steam conditions as the Base Case. The plant produces the same net power output as the Base Case (about 637 MWe). The Case 2a power plant design is however slightly different than the Base Case plant in that there are several provisions made in the plant design to make the future

conversion to oxygen firing and CO_2 capture more easily achievable. Therefore, Case 2a is identified as the "CO_2 capture ready" case. Additionally, this case includes design provisions to support an increase in steam generation rate and gross electrical output, which would be implemented at the time of conversion to oxygen firing and CO_2 capture (i.e. Case 2b). These additional design provisions are provided such that the net electrical output after conversion is maintained at about the same value as before conversion. Comparison of Case 2a to the Base Case (Case 1a) identifies what CO_2 capture ready features and gross electrical output enhancement features are included in the Case 2a plant design. Comparison of the plant costs for these two cases indicates the pre-investment costs included in Case 2a to provide the CO_2 capture ready capability and the equivalent net electrical output feature.

3.1.4 Case 2b - The Case 2a Capture-Ready Power Plant Retrofit with O_2 Firing and CO_2 Capture

When the conversion of Case 2a (the CO_2 capture ready power plant) to CO_2 capture is made (i.e. Case 2b), the power plant is retrofit with an ASU and a GPS. Typically when this type of conversion is made the net plant output is reduced by about 25-30 percent (refer to Case 1b above). For Case 2b, the steam capacity will be increased during the retrofit by about 38% through the modification of and the addition of various plant equipment. The equipment modifications and additions to provide this extra generating capacity are in the areas of the CFB boiler, the steam turbine/generator, and the balance of plant equipment. This steam flow increase is utilized to offset the additional auxiliary power used by the ASU and GPS, thus allowing the converted power plant to produce approximately the same net electrical output after conversion to CO_2 capture as it produced before conversion (i.e. Case 2a). The Case 2b power plant produces a net output of about 621 MWe or about 98 percent of what capture ready Case 2a produces. The 621 MWe net electrical output for Case 2b does not represent a specific limit but is simply the result of trying to match the Case 2a net output.

Hence, by comparing results between Case 2b and Case 1b, the effectiveness of a CO_2 capture ready power plant which includes the feature of providing additional steam flow to maintain net electrical output capacity can be evaluated and quantified.

3.2 Power Plant Performance Summary and Comparison

This section provides a summary and comparison of several important plant performance related outputs from this study. Comparisons of the four case study power plants described above in terms of plant performance and CO_2 emissions are provided in Table 3-1. Table 3-2 shows a comparison of auxiliary power for the four cases.

Additionally, selected results from Table 3-1 are illustrated and compared in Figure 3-1 - Figure 3-8. The comparisons shown in the figures are Boiler Efficiency, Coal Heat Input, Boiler Heat Output, Steam Cycle Efficiency, Total Plant Auxiliary Power, Net Plant Output, Plant Thermal Efficiency, and Plant CO_2 Emissions.

Table 3-1: Plant Performance and CO_2 Emissions Summary and Comparison

		Case-1a: Air Fired CFB (Base-Case) w/o CO_2 Capture		Case-1b: Base Case CFB Converted to O_2 Firing and CO_2 Capture (Lower Net Output)		Case-2a: Air Fired CFB (Capture Ready) w/o CO_2 Capture		Case-2b: Capture Ready CFB Converted to O_2 Firing and CO_2 Capture (Maintain Net Output)	
	(Units)	(English)	(SI)	(English)	(SI)	(English)	(SI)	(English)	(SI)
Auxiliary Power Summary									
Power Plant Auxiliary Power	(kW)	41814	41814	39423	39423	41784	41784	44040	44040
Air Separation Unit - ASU	(kW)	n/a	n/a	91446	91446	n/a	n/a	118849	118849
Gas Processing System - GPS (CO_2 purification, compression, liquefaction)	(kW)	n/a	n/a	86239	86239	n/a	n/a	111960	111960
Total Plant Auxiliary Power	(kW)	41814	41814	217107	217107	41784	41784	274850	274850
	(frac. of Gen. Output)	0.062	0.062	0.314	0.314	0.062	0.062	0.307	0.307
Steam Flows, Efficiencies and Electrical Outputs									
Main Steam Flow	(lbm/hr; kg/hr)	4409345	2000035	4409345	2000035	4409238	1999986	6087844	2761385
Reheat Steam Flow	(lbm/hr; kg/hr)	3695553	1676266	3695553	1676266	3701082	1678774	5052557	2291789
Boiler Efficiency (HHV)[1]	(fraction)	0.8975	0.8975	0.8869	0.8869	0.8975	0.8975	0.8883	0.8883
Steam Cycle Efficiency	(fraction)	0.4520	0.4520	0.4237	0.4237	0.4528	0.4528	0.4198	0.4198
Steam Turbine Generator Output	(kW)	677489	677489	692293	692293	677999	677999	895377	895377
Net Plant Output	(kW)	635675	635675	475186	475186	636215	636215	620527	620527
[1] Boiler Heat Output / (Qcoal-HHV + Qcredits)	(frac. of Case-1 Net Output)	1.00	1.00	0.75	0.75	1.00	1.00	0.98	0.98
Fuel Heat Inputs									
Coal Heat Input (HHV)	(10^6 Btu/hr; 10^6 KJ/hr)	5645	5955	5767	6083	5640	5949	7488	7899
Natural Gas Heat Input (HHV)[2]	(10^6 Btu/hr; 10^6 KJ/hr)	n/a	n/a	43.2	45.6	n/a	n/a	55.1	58.1
Total Fuel Heat Input (HHV)	(10^6 Btu/hr; 10^6 KJ/hr)	5645	5955	5811	6129	5640	5949	7543	7957
[2] Required for GPS & ASU Desiccant Regeneration in Cases 3 and 4									
Overall Plant Efficiency									
Net Plant Heat Rate (HHV)	(Btu/kwhr; KJ/kwhr)	8881	9368	12228	12898	8866	9351	12156	12822
Net Plant Thermal Efficiency (HHV)	(fraction)	0.3843	0.3843	0.2791	0.2791	0.3850	0.3850	0.2808	0.2808
Normalized Thermal Efficiency (HHV; Relative to Base Case)	(fraction)	1.00	1.00	0.73	0.73	1.00	1.00	0.73	0.73
Energy Penalty	(fraction)	0.00	0.00	0.27	0.27	0.00	0.00	0.27	0.27
CO_2 Emissions									
CO_2 Produced	(lbm/hr; kg/hr)	1155799	524259	1160653	526460	1154783	523798	1506831	683483
CO_2 Captured	(lbm/hr; kg/hr)	0	0	1087469	493265	0	0	1411820	640387
Fraction of CO_2 Captured	(fraction)	0.000	0.000	0.937	0.937	0.000	0.000	0.937	0.937
CO_2 Emitted	(lbm/hr; kg/hr)	1155799	524259	73183	33195	1154783	523798	95011	43096
Specific CO_2 Emissions	(lbm/kwhr; kg/kwhr)	1.82	0.82	0.15	0.07	1.82	0.82	0.15	0.07
Normalized Specific CO_2 Emissions (Relative to Base Case)	(fraction)	1.00	1.00	0.08	0.08	1.00	1.00	0.08	0.08
Avoided CO_2 Emissions (as compared to Base Case)	(lbm/kwhr; kg/kwhr)	0.00	0.00	1.66	0.75	0.00	0.00	1.67	0.76

Table 3-2: Comparison of Plant Auxiliary Power Requirements

		Case-1a: Air Fired CFB (Base-Case) w/o CO_2 Capture	Case-1b: Base Case CFB Converted to O_2 Firing and CO_2 Capture (Lower Net Output)	Case-2a: Air Fired CFB (Capture Ready) w/o CO_2 Capture	Case-2b: Capture Ready CFB Converted to O_2 Firing and CO_2 Capture (Maintain Net Output)
Power Plant Auxiliary Power	(Units)	(English)	(English)	(English)	(English)
Induced Draft Fan	(kW)	6289	4900	6284	4820
Primary Air Fan	(kW)	9766	8174	9757	8177
Secondary Air Fan	(kW)	4125	5058	4121	4282
Fluidizing Air Blowers	(kW)	2827	2348	2824	2349
Coal Handling, Preparation, and Feed	(kW)	2479	2533	2474	2891
Limestone Handling and Feed (Lime for 1b and 2b)	(kW)	843	231	842	300
Ash Handling	(kW)	636	809	633	1050
Particulate Removal System Auxiliary Power (baghouse)	(kW)	1217	1243	1216	1614
Condensate Pump	(kW)	1010	1010	1010	1300
Circulating Water Pumps	(kW)	6400	6795	6400	9600
Cooling Tower Fans	(kW)	1611	1710	1611	2327
Steam Turbine Auxiliaries	(kW)	648	648	649	648
Misc. Auxiliary Power (Controls, Lighting, HVAC etc.)	(kW)	2009	2009	2008	2683
Transformer Loss	(kW)	1954	1954	1955	1999
Subtotal	(kW)	41814	39423	41784	44040
	(frac. of Gen. Output)	0.062	0.057	0.062	0.049
Auxiliary Power Summary					
Power Plant Auxiliary Power	(kW)	41814	39423	41784	44040
Air Separation Unit - ASU	(kW)	n/a	91446	n/a	118849
Gas Processing System - GPS (CO_2 purification, compression, liquefaction)	(kW)	n/a	86239	n/a	111960
Total Plant Auxiliary Power	(kW)	41814	217107	41784	274850
	(frac. of Gen. Output)	0.062	0.314	0.062	0.307

3.2.1 Boiler Efficiency:

Figure 3-1 compares CFB boiler efficiencies among the four cases. Cases 2b and 1b, the oxygen-fired cases, are slightly lower than the air-fired cases (2a and 1a respectively) primarily due to a higher cooling medium temperature entering the air heaters. In the oxygen-fired cases the recirculated flue gas is the cooling medium and it is at about 110 F entering the PA and SA fans as compared to 80 F ambient air entering the air heaters for air-fired cases 1a and 2a. This causes about a one percentage point reduction in boiler efficiency for the oxygen-fired cases.

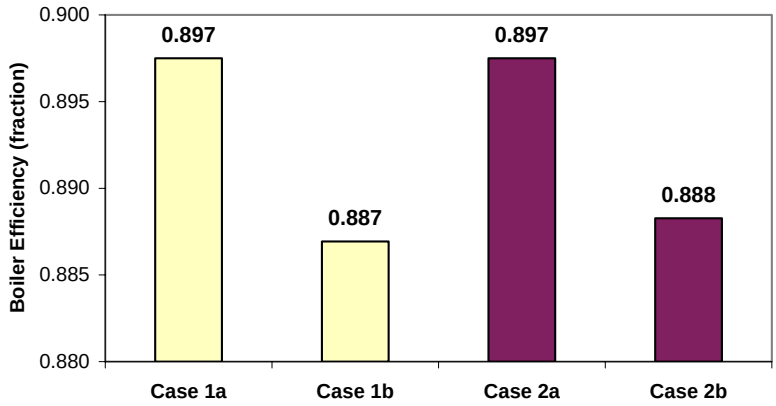

Figure 3-1: Boiler Efficiency Comparison

3.2.2 Coal Heat Input and Boiler Heat Output:

Figure 3-2 compares coal heat input to the CFB boilers and boiler heat output from the boilers for the four cases. The coal heat input and boiler heat output for Case 2b is about 33% higher than for the other cases due to the increase in steam generation for this case. Case 2b is the oxygen-fired case with increased steam generation to offset the added auxiliary power of the ASU and GPS.

The coal heat input and boiler heat output for Cases 1a, 1b, and 2a are nearly the same since each of these cases use a steam cycle that is nearly identical. The only differences in the steam cycles for these three cases is in the use of a low-level heat recovery system for Case 1b.

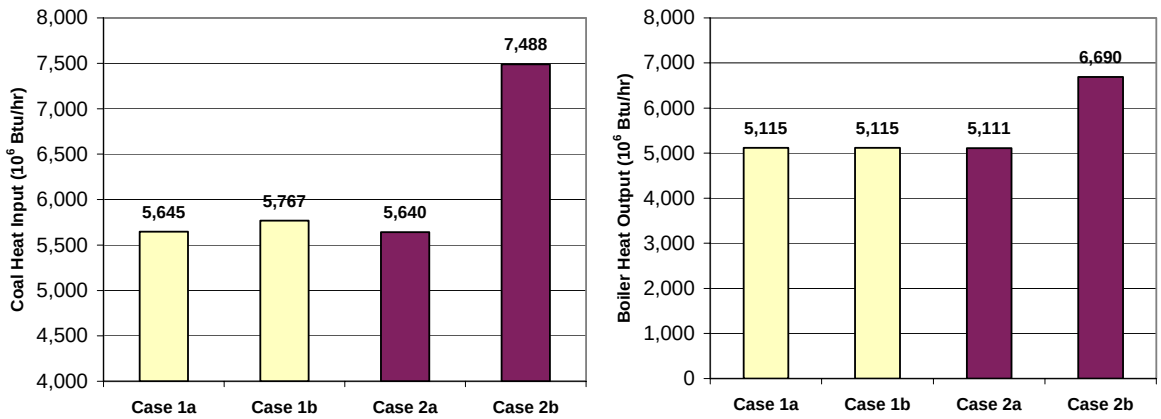

Figure 3-2: Coal Heat Input and Boiler Heat Output Comparison

3.2.3 Steam Cycle Efficiency:

Figure 3-3 compares steam cycle efficiency for the four cases. Cases 1a and 2a, the air-fired Base Case and air-fired capture ready case, have slightly higher steam cycle efficiency than the comparable oxygen-fired cases (Case 1b and 2b, respectively). This is primarily due to the fact that in Cases 1a and 2a there is no low-level heat recovery system utilized. The low-level heat recovery system used in Cases 1b and 2b use feedwater heating (via heat recovery in the ASU and GPS) in parallel with the traditional low-pressure extraction feedwater heaters (Heaters #1, 2, 3 and 4).

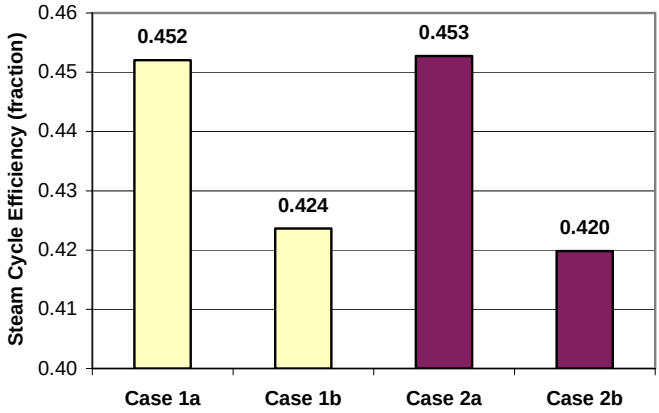

Figure 3-3: Steam Cycle Efficiency Comparison

3.2.4 Total Plant Auxiliary Power:

Figure 3-4 compares total plant auxiliary power among the cases. There are three main categories that comprise the total plant auxiliary power. These are:

1. The Gas Processing System (GPS)
2. The Air Separation Unit (ASU)
3. The traditional power plant auxiliaries associated with the draft system for the CFB boiler,

the cooling water system, and the solids handling systems (coal, sorbent, ash), etc.

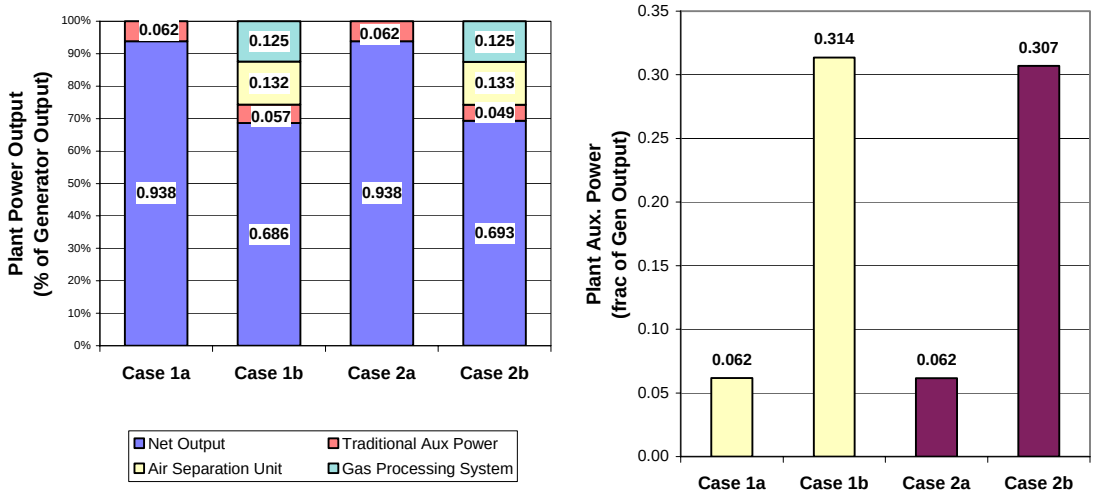

Figure 3-4: Auxiliary Power Comparison between Air-Fired and Oxy-fuel Fired CFB Plants

Cases 1a and 2a, the air-fired Base Case and air-fired capture ready case without CO_2 recovery, require much less auxiliary power than the other cases, since they do not require an ASU or a Gas Processing System to purify and compress the CO_2. The auxiliary power requirements for these cases are only that which is attributable to the traditional power plant equipment. This includes equipment for solids handling (coal, limestone, and ash), air and gas handling, water pumping for the steam cycle and cooling water systems, as well as other miscellaneous systems within the traditional power plant. These cases require slightly more than 6 percent of the generator output for auxiliary power. A detailed listing of plant auxiliary power was shown in Table 3-2.

Case 1b and Case 2b both include the ASU and GPS each of which consume about 13% of the gross output, while the traditional auxiliary power consumption is reduced to about 5% of the generator output for Case 2b and about 6% for Case 2a (see Table 3-2).

3.2.5 Net Plant Power Output:

Figure 3-5 compares the resulting net plant electrical output (MWe) among these four cases. Case 1a and 2a, the air-fired Base Case and air-fired capture ready case without CO_2 recovery, each have essentially the same net plant electrical output. Case 1b suffers about a 25 percent net electrical output reduction due to the power consumption of the ASU and GPS systems. Case 2b, the capture ready case (Case 2a) retrofitted to oxygen firing and CO_2 capture, was designed to be able to recover the net electrical output reduction due to the power consumption of the ASU and GPS systems with increased coal firing and steam generation. The actual net output for Case 2b fell slightly short of the goal of 636 MWe due to a slight under estimation of the coal input needed for this case. No limitation was reached for this case and a small additional increase in the coal firing rate and associated steam generation rate would provide the original net plant electrical output.

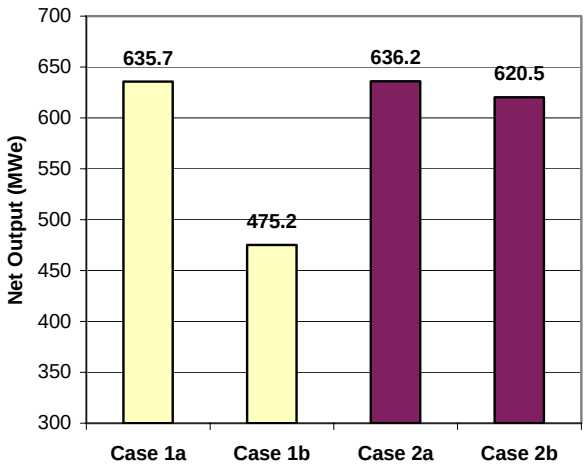

Figure 3-5: Net Plant Electrical Output Comparison

3.2.6 Plant Thermal Efficiency:

Figure 3-6 shows a comparison of Plant Thermal Efficiency between the four cases. These thermal efficiency results reflect the combined impact of boiler efficiency, steam cycle efficiency, and plant auxiliary power on net plant thermal efficiency. As shown previously, the differences in plant auxiliary power associated with the capture of CO_2 represents the dominant factor for differences in overall plant thermal efficiency for the cases studied.

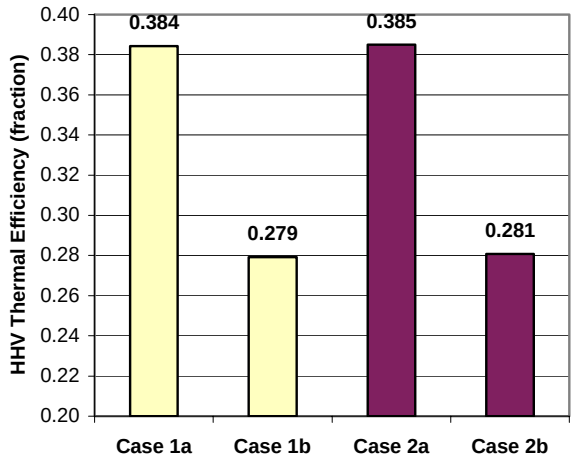

Figure 3-6: Plant Thermal Efficiency Comparison

The resulting energy penalties for Cases 1b and 2b are both about 27 percent as compared to Cases 1a and 2a respectively. There are two primary reasons for the energy penalty associated with Cases 1b and 2b. First, the integration into the power plant of the Air Separation Unit (ASU) to provide combustion oxygen, and second, the Gas Processing System (GPS) to, compress, purify, and liquefy the CO_2 product. The oxygen-fired cases utilize a cryogenic based ASU system, which adds a significant load to the plant auxiliary power requirement [about 180 kWh/ton (200 kWh/tonne) of oxygen supplied or about 13 percent of the steam turbine generator output]. The distillation type GPS power requirements were calculated to be

about 159 kWh/ton (159 kWh/ton) of CO_2 captured or about 12 percent of the steam turbine generator output. Both these systems (ASU and GPS) consume large quantities of auxiliary power as shown in Table 3-2.

3.2.7 Plant CO_2 Emissions:

Figure 3-7 compares overall plant CO_2 emissions on a normalized basis (lbm/kWh - kg/kWh) among these four cases. Also shown in this figure are the quantities of captured CO_2 (normalized basis). The air-fired Base Case (Case1a) and air-fired capture ready case (Case 2a), both without CO_2 recovery, emit about 1.82 lbm/kWh (0.82 kg/kWh) of CO_2 as is typical for bituminous coal fired power plants with supercritical steam cycles. The oxygen-fired cases, which include CO_2 capture systems, show normalized CO_2 emissions of about 0.15 lbm/kWh (0.07 kg/kWh) of CO_2. Both of the oxygen-fired cases capture almost 94 percent of the CO_2 produced.

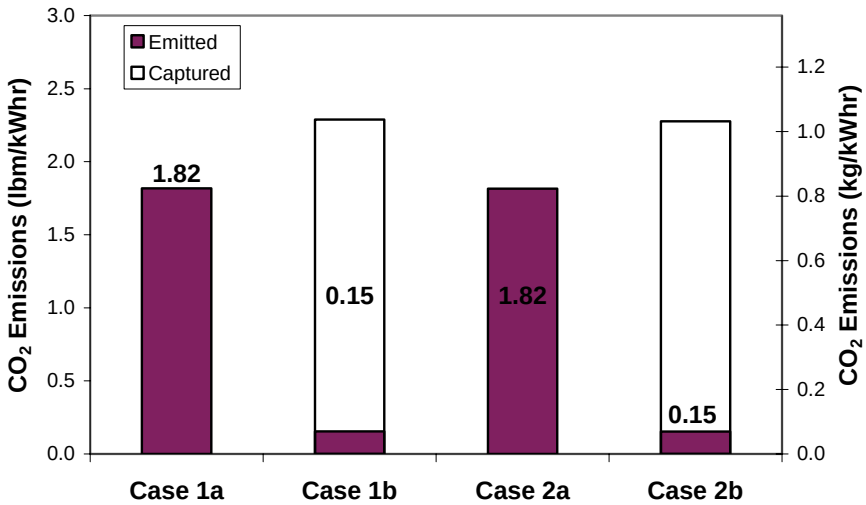

Figure 3-7: Plant CO_2 Emission Comparison

The upper bars (lighter shade) shown on the figure indicate the normalized quantities of CO_2 captured. The captured quantities of CO_2 are about 2.28 and 2.29 lbm/kWh (1.03 and 1.04 kg/kWh) for Case 2b and Case 1b respectively. The lower bars (darker shade) and the lower set of data labels show the normalized CO_2 emitted. The emitted quantity of CO_2 is about 0.15 lbm/kWh (0.07 kg/kWh) for both the CO_2 capture cases. The sum of these two quantities (captured + emitted) represents the quantity of CO_2 produced [e.g., the Case 2b power plant produces 2.28 + 0.15 = 2.43 lbm/kWh (1.10 kg/kWh) of CO_2 on a normalized basis].

Figure 3-8 compares avoided CO_2 emissions on a normalized basis (lbm/kWh) for the two capture cases (Cases 1b and 2b). The avoided CO_2 emissions are calculated relative to the appropriate non-capture case (i.e. Case 1a and 2a respectively). The avoided quantities of CO_2 for Cases 1b and 2b are 1.66 and 1.67 lbm/kWh (0.75 and 0.76 kg/kWh) respectively.

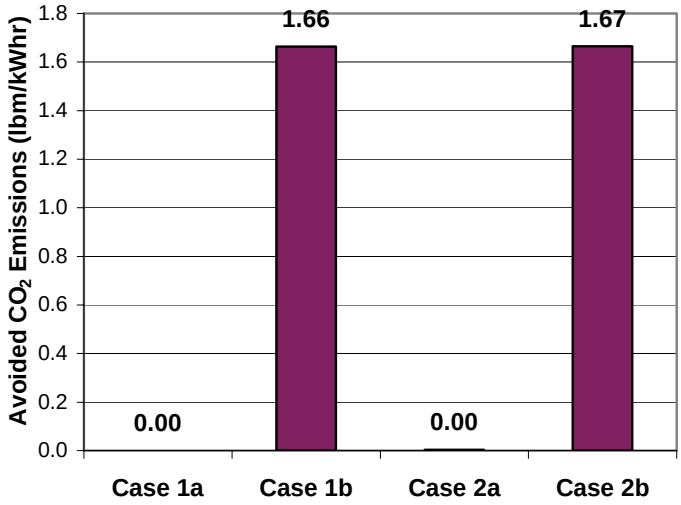

Figure 3-8: Avoided CO_2 Emission Comparison

3.2.8 Criteria Emissions

Case 1a and 2a are designed to meet federal and local emission regulations. Case 2b is modified to fire 38% more fuel and, therefore, will require a new emissions permit at the time of conversion to oxygen firing and CO_2 capture. Case 1b, in which the firing rate is not increased at the time of conversion, but entails major modifications for oxygen firing and CO_2 capture, will also require a new emissions permit.

4 CFB BOILER DESIGN AND PERFORMANCE

This section describes the conceptual designs of the two CFB boilers (Case 1a and Case 2a). Additionally, the modifications to accommodate oxygen firing and CO_2 capture are also described (Case 1b and Case 2b) and the capture ready features are indicated. The performance of the boiler islands for the four case studies is presented in terms of boiler island material and energy balances.

4.1 Water/Steam Flow Path

Each of the four CFB steam generators (Case 1a, 1b, 2a, and 2b) in this study is designed as a once through forced circulation type boiler. The basic steam/water flow path for each of the boilers is briefly described below. Feedwater leaving the final extraction feedwater heater flows through the economizer section located in the backpass of the CFB boiler before entering into the waterwalls of the furnace and the evaporator section located in the external fluidized bed heat exchanger. One steam/water separator is located downstream of the evaporator sections for separating the water/steam mixture while the boiler is operated at low load (below 40%). The separated water is returned to the economizer inlet and the separated steam flows to the superheater circuit at low load.

Above 40% MCR the dry steam produced in the evaporator sections does not need any water separation and flows directly through the separator before feeding the first stages of the superheat circuit. The superheater circuit starts with the inlet ducts of the cyclones, the cyclone enclosures, ducts from the cyclones to the backpass, and the backpass enclosure walls. Two intermediate superheaters located in the external beds located on each side of the furnace are fed in parallel by the steam leaving the backpass walls. The steam leaving the intermediate superheaters is sent to the finishing superheater located at the top of the backpass. Adjusting the ratio of feedwater flow to coal flow controls the steady state superheater outlet steam temperature. During transients, the steam temperature is controlled by two spray water stages; the first stage is upstream of the intermediate superheater and the second stage is located at the finishing superheater inlet.

The reheat system includes a low temperature reheater in the backpass and the finishing reheater in one external bed. Reheat temperature is controlled by adjusting the ash cone valve opening thus biasing the hot solids leaving the cyclones between an uncooled stream which flow directly back to the furnace and a cooled stream which flows through the external beds. In this manner, there isn't any spray water used under steady state operation.

The water/steam path is modified somewhat for Case 2b with the added steam generation surface as described in Sections 4.4 and 4.5.

4.2 Case 1a - Air Fired CFB Boiler Island (Base Case)

This section describes the boiler island for the Base Case (Case 1a). The description includes a process description and a material and energy balance for this case.

4.2.1 Process Description:

This process description briefly describes the function of the major equipment and systems included within the boiler island. A simplified Gas/Solids process flow diagram for the Case 1a boiler island (air fired Base Case) is shown in Figure 4-1. Selected mass flow rates (lbm/hr) and temperatures (^{o}F) are shown on this figure. The flow rates shown are the combined flows for the two parallel CFB boilers. Complete data for all streams are shown in Table 4-1.

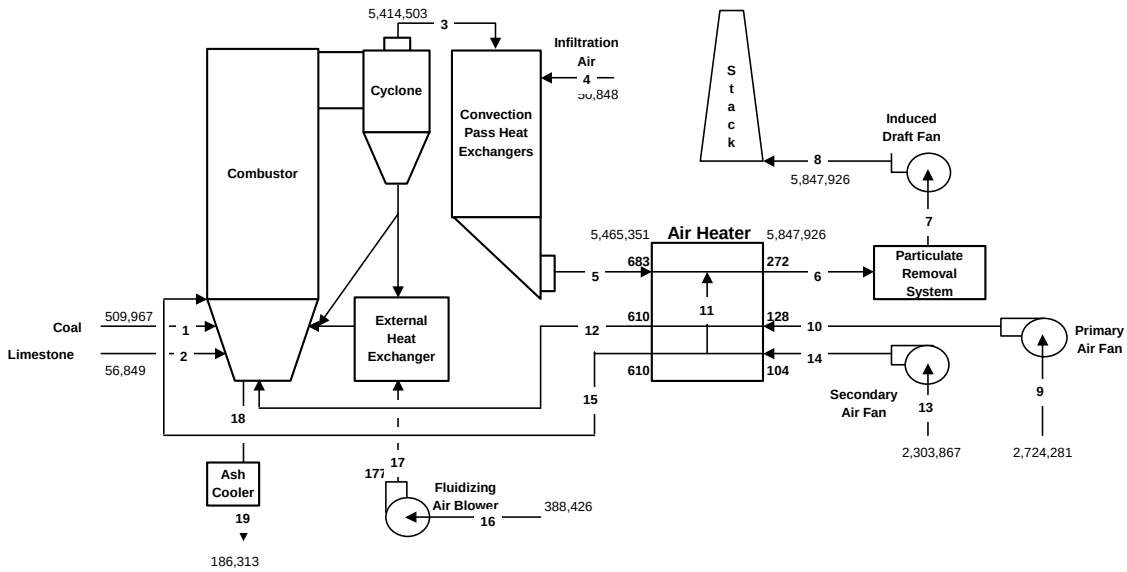

Figure 4-1: Case 1a (Base Case) Air Fired CFB Boiler Island

In this case, coal (Stream 1) is reacted with preheated air (Streams 12, 15) in the Combustor section of the Circulating Fluidized Bed (CFB) system. A traditional furnace limestone injection system is used to remove about 90 percent of the SO_2 produced. The combustor is a water-cooled refractory lined vessel designed to evaporate high-pressure steam. The air (Streams 12, 15, 17) is supplied from primary, secondary and fluidizing air fans. The products of combustion leaving the Combustor flow through cyclones where most of the entrained hot solids are removed and recirculated to the Combustor. By properly splitting the flow of hot recirculated solids leaving the cyclone bottom, between an uncooled stream which flows directly back to the Combustor and the External Heat Exchanger where the solids are cooled before returning to the Combustor, the temperature in the combustor can be controlled to the desired level for a wide variety of operating conditions. Exchanging heat with the power cycle working fluid cools the solids in the External Heat Exchanger.

Draining hot solids from the combustor through water-cooled ash coolers (Stream 18) controls solids inventory in the system while recovering heat from the hot ash.

The flue gas leaving the Cyclones (Stream 3) is cooled in heat exchanger sections located in the convection pass of the system, also by exchanging heat with the power cycle working fluid (steam/water). The flue gas leaving the convection pass heat exchanger sections (Stream 5) is further cooled in the Air Heaters. The flue gas leaving the Air Heaters (Stream 6) is cleaned of fine particulate matter in a baghouse (fabric filter) and enters the Induced Draft (ID) Fan (Stream 7). The flue gas leaving the ID Fan (Stream 8) is then discharged to the atmosphere through a stack.

4.2.2 Material and Energy Balance:

Table 4-1 shows the Boiler Island material and energy balance for Case 1a. The stream numbers shown at the top of each column of the table refer to stream numbers shown in Figure 4-1. The performance shown was calculated with air firing at MCR conditions for this unit and at ambient conditions as defined in the design basis.

Table 4-1: Case 1a Boiler Island Material and Energy Balance (Base Case)

Constituent	(Units)	1	2	3	4	5	6	7	8	9	10
O_2	(Lbm/hr)	16115		184113	11639	195752	283323	283323	283323	623588	623588
N_2	"	7446		3824728	38558	3863286	4153392	4153392	4153392	2065822	2065822
H_2O	"	20348		247479	651	248130	253027	253027	253027	34871	34871
CO_2	"			1155799		1155799	1155799	1155799	1155799		
SO_2	"			2384		2384	2384	2384	2384		
H_2	"	18206									
Carbon	"	316434									
Sulfur	"	11933									
CaO	"										
$CaSO_4$	"										
$CaCO_3$	"		55883								
Ash	"	119485	966								
		Coal	Limestone	Flue Gas to BP	Infiltration Air	Flue Gas to AH	Flue Gas to PR	Flue Gas to ID	FGas from ID	Primary Air	Primary Air
Total Gas	(Lbm/hr)			5414503	50848	5465351	5847926	5847926	5847926	2724281	2724281
Total Solids	"	509967	56849		0	0	0	0	0		
Total Flow	"	509967	56849	5414503	50848	5465351	5847926	5847926	5847926	2724281	2724281
Temperature	(Deg F)	80	80	1639	80	683	272	272	286	80	128
Pressure	(Psia)	14.7	14.7	14.7	14.7	14.6	14.4	14.0	14.7	14.7	18.31
$Enthalpy_{sensible}$	(Btu/lbm)	0.000	0.000	426.180	0.000	154.278	47.727	47.727	51.214	0.000	11.623
Energy											
Chemical	(10^6 Btu/hr)	5645.334									
Sensible	(10^6 Btu/hr)	0.000	0.000	2307.553	0.000	843.185	279.102	279.102	299.494	0.000	31.664
Latent	(10^6 Btu/hr)	0.000	0.000	259.853	0.683	260.537	265.679	265.679	265.679	36.614	36.614
Total Energy(1)	(10^6 Btu/hr)	5645.334	0.000	2567.406	0.683	1103.722	544.780	544.780	565.173	36.614	68.278

Constituent	(Units)	11	12	13	14	15	16	17	18	19
O_2	(Lbm/hr)	87571	576141	527355	527355	487231	88911	88911		
N_2	"	290106	1908641	1747023	1747023	1614098	294543	294543		
H_2O	"	4897	32218	29490	29490	27246	4972	4972		
CO_2	"									
SO_2	"									
H_2	"									
Carbon	"								7731	7731
Sulfur	"								0	
CaO	"								12524	12524
$CaSO_4$	"								45606	45606
$CaCO_3$	"								0	
Ash	"								120452	120452
		AH Lkg Air	Primary Air	Secondary Air	Secondary Air	Secondary Air	Fluidizing Air	Fluidizing Air	Ash Drain	Ash Drain
Total Gas	(Lbm/hr)	382575	2517000	2303867	2303867	2128574	388426	388426		
Total Solids	"								186313	186313
Total Flow	"	382575	2517000	2303867	2303867	2128574	388426	388426	186313	186313
Temperature	(Deg F)	128	610	80	104	610	80	177	1616	302
Pressure	(Psia)	18.3	18.1	14.7	16.4	16.2	14.7	22.642	14.7	14.7
$Enthalpy_{sensible}$	(Btu/lbm)	11.623	131.118	0.000	5.805	131.118	0.000	23.597	413.015	44.700
Energy										
Chemical	(10^6 Btu/hr)								108.955	108.955
Sensible	(10^6 Btu/hr)	4.447	330.025	0.000	13.373	279.095	0.000	9.166	76.950	8.328
Latent	(10^6 Btu/hr)	5.142	33.828	30.964	30.964	28.608	5.220	5.220	0.000	0.000
Total Energy(1)	(10^6 Btu/hr)	9.588	363.854	30.964	44.337	307.703	5.220	14.386	185.905	117.283

Notes:
(1) Energy Basis; Chemical based on Higher Heating Value (HHV); Sensible energy above 80F; Latent based on 1,050 Btu/lbm of water vapor

4.2.3 Coal Feeding System:

Coal is introduced into the furnace through the solids return ducts, which run from the seal pots to the furnace. There are eight (8) coal injection points, two (2) in each solids return duct. The arrangement and number of coal feeders and coal conveyors ensure an even distribution of coal into the furnace even though a coal conveyor may be out of service. Design capacity for the Base Case is based on a coal flow of about 130 ton/h (115 tonne/h).

4.2.4 Bottom Ash Removal System:

Capacity of the bottom ash removal system is defined by the operation before conversion (Case

1a) while the SO_2 capture is achieved by limestone injection into the furnace. Coal flow at MCR is equal to about 130 ton/h (115 tonne/h) before conversion with limestone flow around 17 ton/h (15 tonne/h). Hence, total ash flow is around 47 ton/h (43 tonne/h); 29 ton/h (26 tonne/h) produced by the coal and remaining ash created by the calcination/sulfation reactions.

The bottom ash removal system includes 6 screw coolers with about 9 ton/h (8 tonne/h) capacity per screw. The ash handling will be by a pneumatic transport system for feeding the bottom ash silo.

4.2.5 Air Preheaters:

Two identical regenerative air heaters have been selected for the Base Case and arranged in parallel flue gas streams. Primary air and secondary air pass through the air preheaters and cool the flue gas to around 272°F (140°C).

4.3 Case 1b - The Case 1a CFB Boiler Island Retrofit with O_2 Firing and CO_2 Capture

This section describes the boiler island for Case 1b, which is the retrofit of Case 1a (the capture unready Base Case) with O_2 Firing and CO_2 Capture. The description includes a process description, a material and energy balance, and a description of the modifications required to the boiler island for this case.

4.3.1 Process Description:

This process description briefly describes the function of the major equipment and systems included within the Boiler Island. Figure 4-2 shows a simplified process flow diagram for the Boiler Island of the Case 1b oxygen-fired CFB retrofit. Selected mass flow rates (lbm/hr) and temperatures (^oF) are shown on this figure. Complete data for all streams are shown in the material and energy balance shown in Table 4-2.

In this concept coal (Stream 1) is reacted with a preheated mixture of substantially pure oxygen and recirculated flue gas (Streams 16 and 20) in the Combustor section of the Circulating Fluidized Bed (CFB) system. The oxygen supply (Streams 21, 22, 23a and 23b) is provided from a new cryogenic Air Separation Unit (ASU).

Flue gas (mainly CO_2 and H_2O) and ash enter the two existing cyclones (Stream 3). Most of the solids are removed in the cyclones. The hot solids are recirculated to the combustor through two parallel paths: (1) an uncooled stream, which flows directly back to the combustor, and (2) a stream flowing through the existing two External Heat Exchangers where the solids are cooled before returning to the combustor. The External Heat Exchangers provide evaporator, superheat, and reheat duty.

Draining hot solids through the existing water-cooled ash coolers (Streams 26 and 27) controls solids inventory in the system while effectively recovering heat from the hot ash.

The flue gas leaving the cyclones (Stream 3) is cooled in existing heat exchanger sections (Superheater, Reheater, and Economizer) located in the convection pass (backpass) of the system, also by exchanging heat with the power cycle working fluid. The flue gas leaving the convection pass heat exchanger sections (Stream 5) is further cooled in an existing air heater. The oxygen stream leaving the new Air Separation Unit (Stream 21) is heated in a new tubular oxygen heater, split and mixed with primary and secondary streams of heated recirculated flue gas (Streams 15 and 19) and the mixtures supplied to the furnace. The quantity of recirculated flue gas used (Stream 12) is adjusted to provide proper fluidization for the bed and other equipment in the CFB system requiring a fluidizing medium.

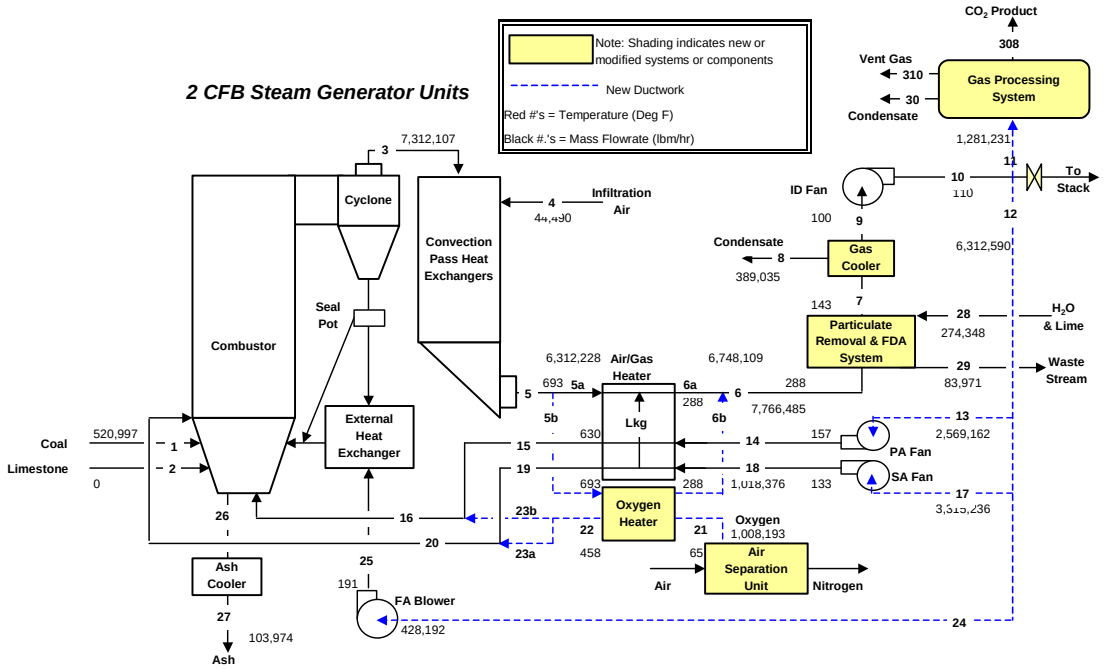

Figure 4-2: Case 1b - CFB Boiler Retrofit with O_2 Firing and CO_2 Capture

The flue gas leaving the existing air heater (Stream 6) is cleaned of fine particulate matter and SO_2 in the modified Particulate Removal and Flash Dryer Absorber (FDA) system where SO_2 is removed. Finally, a new Gas Cooler is used to cool the gas before the flue gas enters the Induced Draft (ID) Fan (Stream 9). The Gas Cooler is used to cool the flue gas to as low a temperature as is possible (using a direct contact water system) before recycling. This is done to minimize the power requirements for the draft system (induced draft fan, fluidizing air blowers, primary air and secondary air fans) and the product gas compression system, which is part of the Gas Processing System. Some H_2O vapor is condensed out of the flue gas in the Gas Cooler. The flue gas leaving the ID Fan (Stream 10), comprised of mostly CO_2, is split with about 17 percent of the flue gas going to the product stream (Stream 11) for further processing for an EOR application. The remainder of the flue gas (about 83 percent) is recirculated to the CFB system (Stream 12).

4.3.2 Material and Energy Balance:

Table 4-2 shows the Boiler Island material and energy balance for Case 1b. The stream numbers shown at the top of each column of the table refer to stream numbers shown in Figure 4-2. The performance shown was calculated with oxygen firing at the Base Case MCR conditions for this unit and at ambient conditions as defined in the design basis.

Table 4-2: Case 1b Boiler Island Material and Energy Balance (Base Case Retrofit with Oxygen firing and CO_2 Capture)

English Units																				
Constituent	**(Units)**	**1**	**2**	**3**	**4**	**5**	**5a**	**5b**	**Lkg**	**6a**	**6b**	**6**	**7**	**8**	**9**	**10**	**11**	**12**	**13**	**14**
O2	(Lbm/hr)	16463		183913	10184	194097	167133	26964	11819	178952	26964	205916	205916		205916	205916	34742	171174	69666	69666
N2	"	7607		254133	33737	287870	247879	39991	17530	265408	39991	305400	305400		305400	305400	51527	253873	103324	103324
H2O	"	20788		363767	569	364336	313722	50614	13111	326833	50614	377447	617447	389035	228412	228412	38538	189874	77277	77277
CO2	"			6456590		6456590	5559632	896957	393173	5952805	896957	6849762	6849762		6849762	6849762	1155693	5694069	2317430	2317430
SO2	"			27712		27712	23862	3850	249	24111	3850	27960	4331		4331	4331	731	3601	1465	1465
H2	"	18600																		
Carbon	"	323278		1580		1580	1360	219		1360	1360	1580								
Sulfur	"	12191																		
CaO	"																			
CaSO3	"																			
CaSO4	"																			
CaCO3	"		0																	
Ash	"	122070	0	24414		24414	21022	3392		21022	3392	24414								
		Coal	Limestone	Flue Gas	Infiltration Air	Flue Gas	Flue Gas	Flue Gas	AH Leakage	Flue Gas	Flue Gas	Flue Gas	Flue Gas	Condensate	Flue Gas	Flue Gas	Flue Gas	Recirc Gas	PA Fan in	PA Fan out
Total Gas	(Lbm/hr)			7286114	44490	7330604	6312228	1018376	435881	6748109	1018376	7766485	7982856		7593821	7593821	1281231	6312590	2569162	2569162
Total Solids	"	520997		25994		25994	22383	3611	0	22383	4752	25994								
Total Flow	"	520997	0	7312107	44490	7356597	6334610	1021987	435881	6770491	1023128	7792479	7982856	389035	7593821	7593821	1281231	6312590	2569162	2569162
Temperature	(Deg F)	80	80	1639	80	693	693	693	143	288	288	288	143	100	100	110	110	110	110	157
Pressure	(Psia)	14.7	14.7	14.7	14.7	14.6	14.6	14.6	0.0	0.0	0.0	14.4	14.0	14.7	13.9	14.7	14.7	14.7	14.7	19.0
$h_{sensible\text{-}gas}$	(Btu/lbm)			434.593		152.301	152.301	152.301	13.598	47.414	47.473	47.422	14.161	0.000	4.224	6.317	6.317	6.317	6.317	16.633
$h_{sensible\text{-}solids}$				420.540		138.993	138.993	138.993	0.000	41.740	41.740	41.740								
Energy														19.960						
Chemical	(10^6 Btu/hr)	5767.433		22.262		22.262	19.170	3.093	0.000	19.170	19.170	22.262								
Sensible	(10^6 Btu/hr)	0.000	0.000	3177.425	0.000	1120.073	964.471	155.602	5.927	320.889	48.544	369.385	113.041	7.765	32.079	47.968	8.093	39.875	16.229	42.732
Latent	(10^6 Btu/hr)	0.000	0.000	381.955	0.598	382.553	329.408	53.145	13.766	343.174	53.145	396.319	648.319	0.000	239.833	239.833	40.465	199.368	81.141	81.141
Total Energy(1)	(10^6 Btu/hr)	5767.433	0.000	3581.642	0.598	1524.888	1313.049	211.839	19.693	683.233	120.858	787.966	761.360	7.765	271.912	287.800	48.558	239.243	97.369	123.873

Notes:
(1) Energy Basis; Chemical based on Higher Heating Value (HHV); Sensible energy above 80F; Latent based on 1050 Btu/Lbm of water vapor

Constituent	(Units)	15	16	17	18	19	20	21	22	23b	23a	24	25	26	27	28	29	30	310	308
O2	(Lbm/hr)	64506	504688	89897	89897	83238	651248	1008193	1008193	440183	568010	11611	11611						34731	11
N2	"	95670	100116	133328	133328	123452	129190	10184	10184	4446	5737	17221	17221						51525	2
H2O	"	71553	71553	99718	99718	92331	92331	0	0	0	0	12879	12879			243320	3320	5571	32967	
CO2	"	2145768	2145768	2990402	2990402	2768891	2768891	0	0	0	0	386237	386237					-265860	9734	1411820
SO2	"	1357	1357	1891	1891	1751	1751	0	0	0	0	244	244							731
H2	"																			
Carbon	"													6319			1580			
Sulfur	"																			
CaO	"														31028	31028	10343			
CaSO3	"																44315			
CaSO4	"																			
CaCO3	"																			
Ash	"													97656	97656		24414			
		Oxy + PA	Hot Oxy + PA	SA Fan in	SA Fan out	Oxy + SA	Hot Oxy + SA	Total Oxygen	Hot Oxygen	Primary O2	Sec O2	Grease Gas	Grease Gas	Hot Ash Drain	Cool Ash Drain	Hydrated Lime	Waste Stream	Condensate	Vent Gas	CO2 Prod
Total Gas	(Lbm/hr)	2378854	2823483	3315236	3315236	3069663	3643410	1018376	1018376	444629	573747	428192	428192						128957	1412564
Total Solids	"													103974	103974	31028	80651			
Total Flow	"	2378854	2823483	3315236	3315236	3069663	3643410	1018376	1018376	444629	573747	428192	428192	103974	103974	274348	83971	-260289	128957	1412564
Temperature	(Deg F)	630	606	110	133	630	606	65	458	458	458	110	191	1616	302	80	143	127	66	58
Pressure	(Psia)	19.0	18.8	14.7	16.7	16.7	16.5	19.0	19.0	19.0	19.0	14.7	22.6	14.7	14.7	14.7	14.7	14.7	345.0	2015.0
$h_{sensible\text{-}gas}$	(Btu/lbm)	132.817	125.441	6.317	11.264	132.817	125.441	-3.361	85.978	85.978	85.978	6.317	24.10							
$h_{sensible\text{-}solids}$														413.02	44.70		15.71	0.00	0.00	0.00
Energy																				
Chemical	(10^6 Btu/hr)													89.049	89.049		22.262	0.000	0.000	0.000
Sensible	(10^6 Btu/hr)	315.952	354.181	20.941	37.341	407.704	457.034	-3.423	87.558	38.228	49.330	2.705	10.318	42.943	4.648	0.000	1.319	-12.211	-0.516	-15.538
Latent	(10^6 Btu/hr)	75.130	75.130	104.704	104.704	96.948	96.948	0.000	0.000	0.000	0.000	13.523	13.523	0.000	0.000	0.000	3.486	0.000	34.615	0.000
Total Energy(1)	(10^6 Btu/hr)	391.083	429.311	125.645	142.045	504.652	553.981	-3.423	87.558	38.228	49.330	16.228	23.842	131.992	93.697	0.000	27.067	-12.211	34.099	-15.538

Notes:
(1) Energy Basis; Chemical based on Higher Heating Value (HHV); Sensible energy above 80F; Latent based on 1050 Btu/Lbm of water vapor

4.3.3 Boiler Island Modifications:

Boiler Island modifications to the existing Base Case CFB unit to accommodate O_2 firing and CO_2 capture involve relatively minor modifications to the CFB boiler, draft system, desulfurization system, and controls and instrumentation. The major new equipment added is the air separation unit (ASU) and the gas processing system (GPS). The basic modifications required in these areas are indicated in Figure 4-2 and discussed briefly below.

4.3.3.1 Boiler Modifications:

The Boiler Island should be inspected for potential air leaks into the system and should be sealed to minimize any air infiltration. Special attention should be given to all penetrations including seal boxes for convective surfaces, access doors, fuel piping, sootblowers, ductwork, dampers, expansion joints, and fans. Modifications to the existing boiler pressure parts are not required.

4.3.3.2 Modified Draft System:

The draft system comprises all the fans and blowers (primary air fan, secondary air fan, fluidizing air blowers, and induced draft fan), ductwork, dampers, expansion joints, etc., that supply air to and remove flue gas from the unit. This system must be modified such that the boiler can operate in the air-fired mode for start-up and in the new oxygen-fired mode with gas recirculation for CO_2 capture. The system also must be flexible enough to allow the on line transition from air to oxygen firing.

Fans and Blowers: The forced draft system (PA & SA fans, FA Blowers) will be handling recirculated flue gas rather than air during O_2 fired operations. The recirculated flue gas has a higher molecular weight (more CO_2 and less N_2) and a higher inlet temperature to the fans and blowers than air. The recirculated flue gas even with the higher inlet temperature to the fans has an increased density. Taking all these differences into consideration, the existing primary air fan, secondary air fan, and fluidizing air blowers (FBHE and Seal Pot blowers) will easily accommodate the new operating conditions expected with O_2 firing.

Although the ID fan will also be handling the increased density flue gas, it must now additionally accommodate a larger pressure rise across the fan. The increased system draft loss is due primarily to the addition of the flash dryer absorber (FDA) system for SO_2 removal. Because of the increased draft losses, a new ID fan and motor are required.

An additional benefit of the higher molecular weight gas is that the draft system fans and blowers will consume less power as compared to the equivalent MCR operating condition with air firing. Some of this reduction results from introducing the oxygen from the ASU downstream of the PA and SA fans and some results from the reduction in inlet temperature for the ID fan. Even though the ID fan must handle more mass flow and produces a higher pressure rise with O_2 firing, because the inlet temperature with O_2 firing is so much lower than with air firing, the power requirement is significantly lower with O_2 firing as compared to air firing. Partially offsetting these reductions is the slightly higher inlet temperatures to the PA, SA, and fluidizing air blowers.

New and Modified Ductwork: Significant modifications and additions were required to the existing plant ductwork system in order to accommodate the new gas recirculation system, FDA system, Oxygen heater, and the addition of O_2 firing capability as described below. New ductwork is required in several areas of the Boiler Island. Oxygen supply control valves and piping from the new ASU to the existing primary and secondary air heater outlet ducts is required. New ductwork with control and isolation dampers is also required for the recycle flue gas streams that feed the primary and secondary air fans and the existing fluidizing air blowers.

Ductwork is also modified to accommodate the new oxygen heater and FDA system. Additionally, new ductwork and dampers are required to supply product gas (primarily CO_2) to the new Gas Processing System. Various isolation dampers are also required. Provisions in the new ductwork system to accommodate startup with air firing (air inlet duct with associated isolation dampers) are also required.

4.3.3.3 Modified Controls and Instrumentation for the Boiler Island:

Additional controls and instrumentation will be required for the new components and systems. The transition between air firing and oxygen firing as well as additional safety precautions associated with oxygen use in this type of setting needs careful consideration.

4.3.3.4 Modified Desulfurization System:

In the Base Case (Case 1a), a traditional furnace limestone injection system is used to remove about 90 percent of the SO_2 produced. For the oxygen fired Case 1b, limestone is not added to the furnace. Instead, sulfur capture is done in a backend Flash Dryer Absorber (FDA) system with lime injection.

The FDA system is a dry SO_2 removal process, which operates in a humid flue gas condition. The heart of the FDA system is the patented mixer/humidifier. The equilibrium moisture content in the ash received from the fabric filter is increased a few percent by the addition of water. The mixer uniformly distributes the water into the entire collected ash stream prior to re-injection into the flue gas. The humidified solids in the mixer continue to behave as a free-flowing powder, without clumping, enabling even distribution of the moist powder into the flue gas for SO_2 absorption. The blending of the fresh lime, water, and recycle product is done externally from the flue gas. This ensures a homogeneous mixture prior to injection back into the flue gas stream.

The typical end product is a dry powder consisting of a mixture of fly ash, calcium sulfite/sulfate, hydroxide, carbonate, chloride, etc.

Figure 4-3 shows a simplified schematic process diagram of the FDA system. In the current application the existing baghouse (fabric filter) from Case 1a is used with modifications as required for the addition of the FDA system.

Flue gas leaving the existing air heater, with a high SO_2 content enters the reactor section prior to entering the fabric filter. Here, a mixture of recirculated ash, fresh lime and water are injected into the flue gas stream and most of the SO_2 reacts with the lime to form $CaSO_3 \cdot ½ H_2O$. Some $CaSO_4 \cdot 2H_2O$ is formed and a small amount of $CaCO_3$ is also formed. The particulate matter is collected in the modified existing fabric filter. A portion of the collected particulate is removed as the waste product stream with the remainder of the particulate matter being recirculated as described previously. Water is added to control the humidity of the flue gas stream leaving the fabric filter to a proper level. Fresh lime is also added.

Because of the high CO_2 content in the flue gas with oxygen firing, there is less confidence in the FDA performance predictions for Case 1b than for air firing. Various performance assumptions were made based on test results that were developed in an earlier part of this project (refer to Volume I) and these assumptions were used to develop the FDA system performance used for Case 1b.

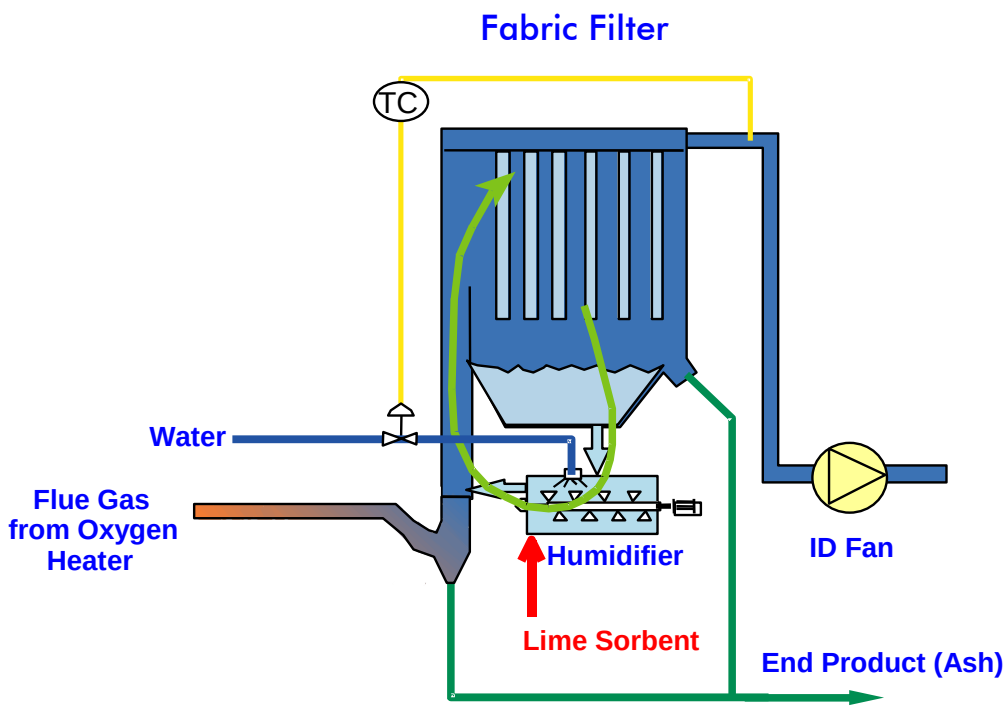

Figure 4-3: Flash Dryer Absorber (FDA) System Schematic Diagram (simplified)

Addition of the new FDA system will require the following basic modifications:

- Modifications to the existing Fabric Filter (FF) hoppers for air-slide attachments
- Elevation of the FF to accommodate the FDA system and its components
- Modification of the existing FF inlet duct for connection to the FDA outlet
- Modification of the existing duct leaving the air heater for connection to the FDA system
- Internal coating of the FF outlet duct and tube sheet to mitigate moisture corrosion
- Modification to the ash handling system

4.3.3.5 Coal Feeding System:

Modifications are not required for the coal feeding system for Case 1b.

4.3.3.6 Bottom Ash Removal System:

Capacity of the bottom ash removal system for Case 1a where SO_2 capture is achieved by limestone injection into the furnace is greater than for Case 1b. In Case 1b SO_2 removal is done in the FDA system with lime injection and no limestone is added in the furnace. This reduces the bottom ash discharge rate for Case 1b as compared to Case 1a. Therefore modifications are not required for the bottom ash removal system for Case 1b.

4.3.3.7 Major New Equipment Added:

The major new equipment added to the boiler island for Case 1b is the air separation unit (ASU) to provide oxygen to the boiler and the gas processing system (GPS) to purify and compress the CO_2 product gas.

4.4 Case 2a - Air Fired Capture Ready CFB Boiler Island

This section describes the boiler island for Case 2a (the air fired capture ready case). The description includes a process description and a material and energy balance for this case as well as a description of the capture ready features included in the design of this boiler island.

4.4.1 Process Description:

The process description for Case 2a is identical to that of Case 1a and is not repeated here. A simplified Gas/Solids process flow diagram for Case 2a (air fired Capture Ready CFB) is shown in Figure 4-4. Selected mass flow rates (lbm/hr) and temperatures (^{o}F) are shown on this figure. The flow rates shown are the combined flows for the two parallel CFB boilers. Complete data for all streams are shown in Table 4-3.

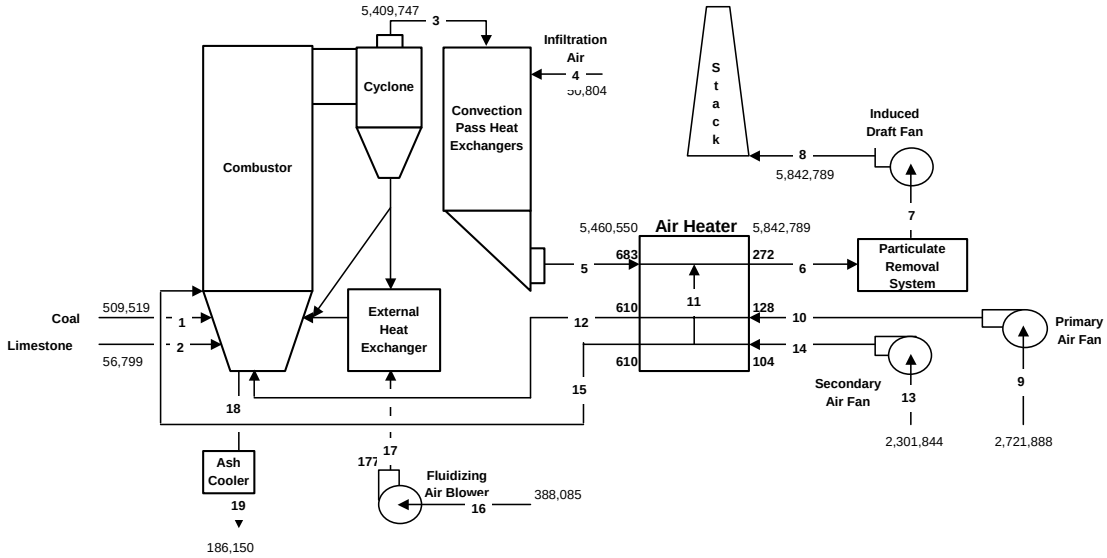

Figure 4-4: Case 2a Capture Ready Air Fired CFB Boiler Island

4.4.2 Material and Energy Balance:

Table 4-3 shows the Boiler Island material and energy balance for Case 2a. The stream numbers shown at the top of each column of the table refer to stream numbers shown in Figure 4-4. The performance shown was calculated with air firing at MCR conditions for this unit and at ambient conditions as defined in the design basis.

Table 4-3: Case 2a Boiler Island Material and Energy Balance (CO_2 Capture Ready)

Constituent	(Units)	1	2	3	4	5	6	7	8	9	10
O_2	(Lbm/hr)	16101		183951	11629	195580	283074	283074	283074	623040	623040
N_2	"	7439		3821368	38525	3859893	4149744	4149744	4149744	2064008	2064008
H_2O	"	20330		247262	650	247912	252805	252805	252805	34840	34840
CO_2	"			1154783		1154783	1154783	1154783	1154783		
SO_2	"			2382		2382	2382	2382	2382		
H_2	"	18190									
Carbon	"	316157									
Sulfur	"	11923									
CaO	"										
$CaSO_4$	"										
$CaCO_3$	"		55833								
Ash	"	119380	966								
		Coal	Limestone	Flue Gas to BP	Infiltration Air	Flue Gas to AH	Flue Gas to PR	Flue Gas to ID	FGas from ID	Primary Air	Primary Air
Total Gas	(Lbm/hr)			5409747	50804	5460550	5842789	5842789	5842789	2721888	2721888
Total Solids	"	509519	56799								
Total Flow	"	509519	56799	5409747	50804	5460550	5842789	5842789	5842789	2721888	2721888
Temperature	(Deg F)	80	80	1639	80	683	272	272	286	80	128
Pressure	(Psia)	14.7	14.7	14.7	14.7	14.6	14.4	14.0	14.7	14.7	18.3
$Enthalpy_{sensible}$	(Btu/lbm)	0.000	0.000	426.180	0.000	154.278	47.727	47.727	51.214	0.000	11.623
Energy											
Chemical	(10^6 Btu/hr)	5640.375									
Sensible	(10^6 Btu/hr)	0.000	0.000	2305.526	0.000	842.444	278.857	278.857	299.231	0.000	31.636
Latent	(10^6 Btu/hr)	0.000	0.000	259.625	0.683	260.308	265.445	265.445	265.445	36.582	36.582
Total Energy(1)	(10^6 Btu/hr)	5640.375	0.000	2565.151	0.683	1102.752	544.302	544.302	564.676	36.582	68.218

Constituent	(Units)	11	12	13	14	15	16	17	18	19
O_2	(Lbm/hr)	87494	575635	526892	526892	486803	88833	88833		
N_2	"	289851	1906965	1745488	1745488	1612680	294285	294285		
H_2O	"	4893	32189	29464	29464	27222	4967	4967		
CO_2	"									
SO_2	"									
H_2	"									
Carbon	"								7724	7724
Sulfur	"								0	0
CaO	"								12513	12513
$CaSO_4$	"								45566	45566
$CaCO_3$	"								0	0
Ash	"								120346	120346
		AH Lkg Air	Primary Air	Secondary Air	Secondary Air	Secondary Air	Fluidizing Air	Fluidizing Air	Ash Drain	Ash Drain
Total Gas	(Lbm/hr)	382239	2514789	2301844	2301844	2126704	388085	388085		
Total Solids	"								186150	186150
Total Flow	"	382239	2514789	2301844	2301844	2126704	388085	388085	186150	186150
Temperature	(Deg F)	128	610	80	104	610	80	177	1616	302
Pressure	(Psia)	18.3	18.1	14.7	16.4	16.2	14.7	22.6	14.7	14.7
$Enthalpy_{sensible}$	(Btu/lbm)	11.623	131.118	0.000	5.805	131.118	0.000	23.597	413.015	44.700
Energy										
Chemical	(10^6 Btu/hr)								108.859	108.859
Sensible	(10^6 Btu/hr)	4.443	329.735	0.000	13.362	278.850	0.000	9.158	76.883	8.321
Latent	(10^6 Btu/hr)	5.137	33.799	30.937	30.937	28.583	5.216	5.216	0.000	0.000
Total Energy(1)	(10^6 Btu/hr)	9.580	363.534	30.937	44.298	307.433	5.216	14.374	185.742	117.180

Notes:
(1) Energy Basis; Chemical based on Higher Heating Value (HHV); Sensible energy above 80F; Latent based on 1,050 Btu/lbm of water vapor

4.4.3 Capture Ready Features for the Case 2a Boiler Island

The CO_2 capture ready features in the design of the Case 2a CFB boiler and the modifications of this boiler to implement oxygen firing and CO_2 capture (Case 2b) are described briefly below. The CO_2 capture ready features of the draft system, coal feeding system, the bottom ash removal system, and the air preheater system are also discussed. CFB Boiler System:

The Case 2a capture ready steam generator design has been modified, as compared to the Base Case (Case 1a), to enhance the implementation of future equipment when moving to oxygen firing and CO_2 capture (Case 2b). When the conversion is made, additional heating surfaces

will be installed throughout the unit (furnace, economizer, external beds) to accommodate the increase in the steam flow by 38%.

Furnace: Provisions are made to add extended walls welded to the front and the rear walls of the furnace when the unit is converted to oxygen firing and CO_2 capture (Case 2b). Figure 4-6 shows the extended walls (wing walls) in blue added to the furnace.

A slightly higher furnace is required for Case 2a/2b as compared to the Base Case to accommodate the longer backpass which has additional space left for future economizer surface as explained below. The furnace for Case 2a (and Case 2b) is therefore 1.5 meters (4.9 ft) higher than the Base Case (Case 1a).

External Fluidized Bed Heat Exchangers: Compared to the Base Case, the dimensions of the Case 2a external fluidized bed heat exchangers are increased to allow the future additional assemblies to be added. The box length of the external heat exchanger bed with the intermediate superheater will be increased by 0.7 meter (2.3 ft), so that the length will increase from 5.71 meters (18.7 ft) to 6.41 meters (21.0ft). The dimensions of the grate will be increased accordingly as well as the number of fluidizing nozzles. The length of inlet and outlet headers will also be increased by 20% including the nozzles needed for the future welding of assemblies. Seven (7) assemblies per FBHE will be installed when converting Case 2a to CO_2 capture (Case 2b).

Also, the box length of the external heat exchanger bed where the finishing reheat is located will be increased from 7.03 meters (23.1 ft) to 8.63 meters (28.3 ft). The length of headers will be increased by 28%. Thirteen (13) assemblies will be added when Case 2a is converted to CO_2 capture (Case 2b). This arrangement maintains the ash flow through the external bed about the same as for the Base Case as well as the pressure drop along the reheat steam flow path.

The modifications of FBHE's dimensions bring about 11% higher fluidizing airflow compared to the Base Case.

Economizer: The backpass for Case 2a will be designed to allow three (3) additional loops in the economizer circuit to be added when converted to CO_2 capture (Case 2b). The economizer inlet header will be shifted to enhance the addition of the economizer surface in the future. With this modification the flue gas temperature entering the air preheaters will be kept close to the temperature before conversion.

Generally speaking, the pressure parts of the Case 2a (capture ready) boilers are sized to withstand a slight increase in pressure drop brought out by the future increased steam flow of Case 2b, the capture ready converted unit.

4.4.3.1 Coal Feeding System:

Coal is introduced into the furnace through the solids return ducts, which run from the seal pots to the furnace. There are eight (8) coal injection points, two (2) in each solids return duct. The arrangement and number of coal feeders and coal conveyors ensure an even distribution of coal into the furnace even though a coal conveyor may be out of service. Design capacity for the Base Case (Case 1a) is based on a coal flow of about 115 tonne/h whereas the coal flow will have to be increased by about 33% when operating in the CO_2 capture mode (Case 2b). The coal feeding system is therefore sized with a 33% margin before conversion (i.e. Case 2a).

4.4.3.2 Bottom Ash Removal System:

Capacity of the bottom ash removal system is defined by the operation before conversion (Case 2a) where the SO_2 capture is achieved by limestone injection into the furnace. Coal flow at MCR is equal to about 115 tonne/h before conversion with limestone flow around 15 tonne/h.

Hence, total ash flow is around 43 tonne/h; 26 tonne/h produced by the coal and remaining ash created by the calcination sulfation reactions. Although the coal input capacity is to be increased by 33% when converted (Case 2b), total ash will not exceed 33 tonne/h because the total sulfur capture will be done with lime through the back end equipment.

The bottom ash removal system includes 6 screws coolers with 8 tonne/h capacity per screw and the ash handling will be by a pneumatic transport system for feeding the bottom ash silo.

4.4.3.3 Air Preheaters:

Two identical regenerative air heaters have been selected for the Capture Ready case (Case 2a) and arranged in parallel flue gas streams. Primary air and secondary air pass through the air preheaters and cool the flue gas to around 272°F (140°C). Space has been left for the addition of a tubular oxygen heater and its associated ductwork (oxygen to and from; flue gas to and from), which will be added when the unit is retrofit with oxygen firing and CO_2 capture. This heater will be used for heating the oxygen supplied by ASU. This gas stream will be in parallel with the two regenerative air heaters. After the retrofit, the regenerative air heaters will be used for heating the cool recirculated flue gas coming from the PA and SA fans. Heated oxygen, leaving the tubular oxygen heater, will be blended into the hot recirculated flue gas leaving the regenerative air preheaters before the mixture is introduced to the furnace. The oxygen from the ASU will be provided at the needed pressure for mixing with the flue gas leaving the regenerative air preheaters.

4.4.3.4 Draft System:

The draft system comprises all the fans and blowers (primary air fan, secondary air fan, fluidizing air blowers, and induced draft fan), ductwork, dampers, expansion joints, etc., that supply air to and remove flue gas from the unit. The primary capture ready feature in this system is to leave enough space in the layout of the boiler to allow the addition of the new gas recirculation ducts, oxygen ducts, and oxygen heater when the unit is converted to oxygen firing and CO_2 capture (Case 2b).

4.5 Case 2b – The Case 2a Capture Ready CFB Boiler Island Retrofit with O_2 firing and CO_2 Capture

This section describes the boiler island for Case 2b, which is the retrofit of Case 2a (the capture ready case) with O_2 firing and CO_2 capture. The description includes a process description, a material and energy balance, and a description of the modifications required to the boiler island for this case.

4.5.1 Process Description:

This process description briefly describes the function of the major equipment and systems included within the Boiler Island for this case. Figure 4-5 shows a simplified process flow diagram for the Boiler Island of the Case 2b oxygen-fired CFB retrofit. Selected mass flow rates (lbm/hr) and temperatures (^{o}F) are shown on this figure. This process description is identical to that described for Case 1b and is not repeated here. Please refer to Section 4.3.1 for this description. Complete data for all streams are shown in the material and energy balance shown in Table 4-4.

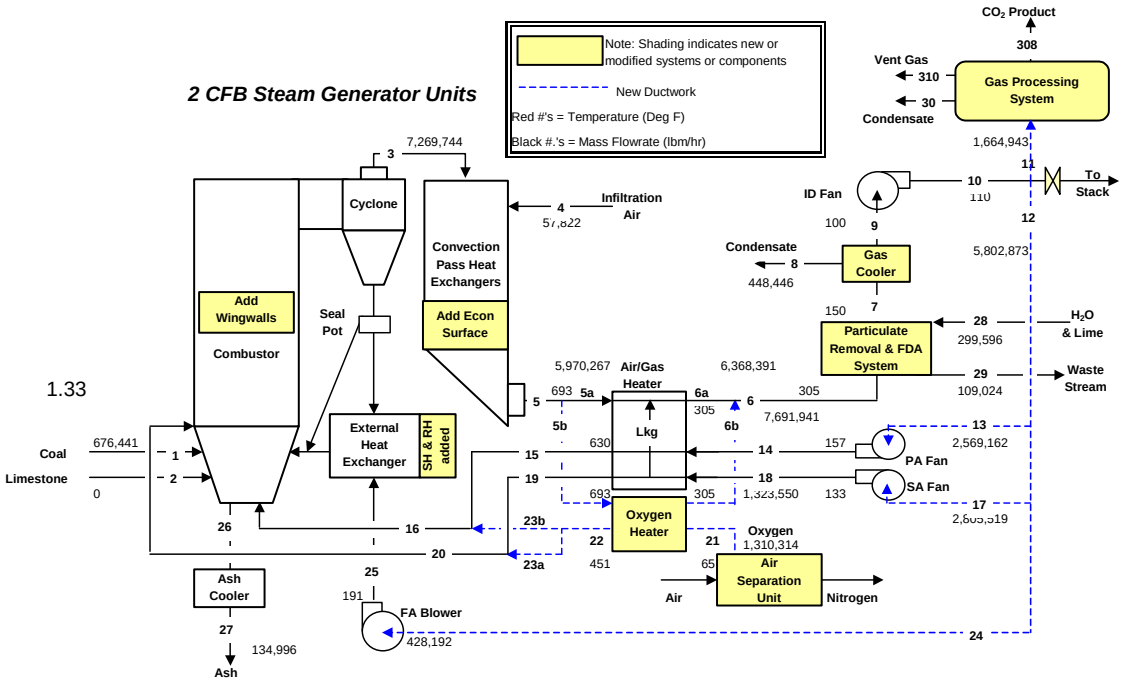

Figure 4-5: Case 2b –Capture Ready CFB Boiler (Case 2a) Retrofit with O_2 Firing and CO_2 Capture

4.5.2 Material and Energy Balance:

Table 4-4 shows the Boiler Island material and energy balance for Case 2b. The stream numbers shown at the top of each column of the table refer to stream numbers shown in Figure 4-5. The performance shown was calculated with oxygen firing and 138% of the original steam flow for this unit with ambient conditions as defined in the design basis.

Table 4-4: Case 2b Boiler Island Material and Energy Balance (Capture Ready CFB Retrofit with Oxygen Firing and CO_2 Capture)

English Units																				
Constituent	**(Units)**	**1**	**2**	**3**	**4**	**5**	**5a**	**5b**	**Lkg**	**6a**	**6b**	**6**	**7**	**8**	**9**	**10**	**11**	**12**	**13**	**14**
O2	(Lbm/hr)	21376		183951	13235	197187	161405	35782	11104	172509	35782	208291	208291		208291	208291	46438	161853	71659	71659
N2	"	9876		240471	43847	284318	232725	51593	16011	248736	51593	300329	300329		300329	300329	66958	233371	103323	103323
H2O	"	26990		405404	740	406144	332444	73700	11978	344422	73700	418122	673122	448446	224676	224676	50091	174585	77296	77296
CO2	"			6371460		6371460	5215283	1156177	358804	5574087	1156177	6730264	6730264		6730264	6730264	1500506	5229758	2315421	2315421
SO2	"			34708		34708	28410	6298	227	28637	6298	34935	4256		4256	4256	949	3307	1464	1464
H2	"	24149																		
Carbon	"	419732		2051		2051	1679	372		1679	1679	2051								
Sulfur	"	15829																		
CaO	"																			
CaSO3	"																			
CaSO4	"																			
CaCO3	"		0																	
Ash	"	158490	0	31698		31698	25946	5752		25946	5752	31698								
		Coal	Limestone	Flue Gas	Infiltration Air	Flue Gas	Flue Gas	Flue Gas	AH Leakage	Flue Gas	Flue Gas	Flue Gas	Flue Gas	Condensate	Flue Gas	Flue Gas	Flue Gas	Recirc Gas	PA Fan in	PA Fan out
Total Gas	(Lbm/hr)			7235995	57822	7293817	5970267	1323550	398125	6368391	1323550	7691941	7916262		7467816	7467816	1664943	5802873	2569162	2569162
Total Solids	"	676441		33749		33749	27625	6124	0	27625	7431	33749								
Total Flow	"	676441	0	7269744	57822	7327566	5997892	1329674	398125	6396016	1330981	7725690	7916262	448446	7467816	7467816	1664943	5802873	2569162	2569162
Temperature	(Deg F)	80	80	1639	80	693	693	693	145	305	305	305	150	100	100	110	110	110	110	157
Pressure	(Psia)	14.7	14.7	14.7	14.7	14.6	14.6	14.6	0.0	0.0	0.0	14.4	14.0	14.7	13.9	14.7	14.7	14.7	14.7	19.0
$h_{sensible\text{-}gas}$	(Btu/lbm)			436.714		153.091	153.091	153.091	13.823	51.812	51.892	51.826	15.990	0.000	4.225	6.318	6.318	6.318	6.318	16.637
$h_{sensible\text{-}solids}$				420.540		138.993	138.993	138.993	0.000	45.466	45.466	45.466								
Energy														19.960						
Chemical	(10^6 Btu/hr)	7488.207		28.904		28.904	23.659	5.245	0.000	23.659	23.659	28.904								
Sensible	(10^6 Btu/hr)	0.000	0.000	3174.256	0.000	1121.307	917.832	203.474	5.503	331.213	69.020	400.173	126.583	8.951	31.549	47.179	10.518	36.660	16.231	42.742
Latent	(10^6 Btu/hr)	0.000	0.000	425.674	0.777	426.451	349.067	77.385	12.577	361.644	77.385	439.028	706.778	0.000	235.910	235.910	52.596	183.314	81.160	81.160
Total Energy(1)	(10^6 Btu/hr)	7488.207	0.000	3628.835	0.777	1576.663	1290.559	286.104	18.080	716.516	170.064	868.106	833.361	8.951	267.459	283.088	63.114	219.974	97.391	123.903

Constituent	(Units)	15	16	17	18	19	20	21	22	23b	23a	24	25	26	27	28	29	30	310	308
O2	(Lbm/hr)	66351	692697	78251	78251	72455	756423	1310314	1310314	626346	683968	11943	11943						46427	11
N2	"	95669	101996	112828	112828	104470	111379	13235	13235	6327	6909	17220	17220						66956	2
H2O	"	71570	71570	84407	84407	78154	78154	0	0	0	0	12883	12883			259310	4310	48883	1208	
CO2	"	2143908	2143908	2528434	2528434	2341143	2341143	0	0	0	0	385902	385902					631	88056	1411820
SO2	"	1356	1356	1599	1599	1480	1480	0	0	0	0	244	244							949
H2	"																			
Carbon	"													8204	8204		2051			
Sulfur	"																			
CaO	"															40286	13429			
CaSO3	"																57536			
CaSO4	"																			
CaCO3	"																			
Ash	"													126792	126792		31698			
		Oxy + PA	Hot Oxy + PA	SA Fan in	SA Fan out	Oxy + SA	Hot Oxy + SA	Total Oxygen	Hot Oxygen	Primary O2	Sec O2	Grease Gas	Grease Gas	Hot Ash Drain	Cool Ash Drain	Hydrated Lime	Waste Stream	Condensate	Vent Gas	CO2 Prod
Total Gas	(Lbm/hr)	2378854	3011526	2805519	2805519	2597703	3288580	1323550	1323550	632673	690877	428192	428192						202647	1412782
Total Solids	"													134996	134996	40286	104714			
Total Flow	"	2378854	3011526	2805519	2805519	2597703	3288580	1323550	1323550	632673	690877	428192	428192	134996	134996	299596	109024	49514	202647	1412782
Temperature	(Deg F)	630	596	110	133	630	596	65	451	451	451	110	191	1616	302	80	150	127	66	58
Pressure	(Psia)	19.0	18.8	14.7	16.7	16.7	16.5	19.0	19.0	19.0	19.0	14.7	22.6	14.7	14.7	14.7	14.7	14.7	345.0	2015.0
$h_{sensible\text{-}gas}$	(Btu/lbm)	132.816	122.626	6.318	11.266	132.816	122.626	-3.361	84.312	84.312	84.312	6.318	24.10							
$h_{sensible\text{-}solids}$														413.02	44.70		17.56	0.00	0.00	0.00
Energy																				
Chemical	(10^6 Btu/hr)													115.618	115.618		28.904	0.000	0.000	0.000
Sensible	(10^6 Btu/hr)	315.951	369.293	17.724	31.607	345.017	403.267	-4.449	111.592	53.342	58.249	2.705	10.321	55.755	6.034	0.000	1.914	2.323	-0.627	-15.541
Latent	(10^6 Btu/hr)	75.148	75.148	88.627	88.627	82.062	82.062	0.000	0.000	0.000	0.000	13.527	13.527	0.000	0.000	0.000	4.526	0.000	1.268	0.000
Total Energy(1)	(10^6 Btu/hr)	391.099	444.441	106.351	120.234	427.079	485.329	-4.449	111.592	53.342	58.249	16.232	23.847	171.373	121.652	0.000	35.344	2.323	0.641	-15.540

Notes:
(1) Energy Basis; Chemical based on Higher Heating Value (HHV); Sensible energy above 80F; Latent based on 1050 Btu/Lbm of water vapor

4.5.3 Boiler Island Modifications:

Boiler Island modifications to the Case 2a capture ready CFB unit to accommodate O_2 firing and CO_2 capture involve modifications to the CFB boiler, draft system, desulfurization system, and controls and instrumentation. In order to increase the steam generation capacity to overcome the auxiliary power increase due to the addition of the ASU and GPS, pressure part modifications are done to the CFB boiler. Pressure part modifications include the addition of extended walls in the furnace, an additional economizer bank, and the addition of SH & RH surface in the external fluidized bed heat exchangers. The major new equipment added during this retrofit is the air separation unit (ASU) and the gas processing system (GPS). The basic modifications required in these areas are indicated in Figure 4-5 and discussed briefly below.

4.5.3.1 Boiler Modifications:

As described in Section 4.3.3, the Boiler Island should be inspected for potential air leaks into the system and should be sealed to minimize any air infiltration. Special attention should be given to all penetrations including seal boxes for convective surfaces, access doors, fuel piping, sootblowers, ductwork, dampers, expansion joints, and fans.

Pressure Part Modifications for Increased Steam Generation:

The Case 2a capture ready steam generator was designed to enhance the implementation of future equipment when moving to oxygen firing and CO_2 capture (Case 2b). When the conversion is made, additional heating surfaces will be installed throughout the unit (furnace, economizer, external fluidized bed heat exchangers) to accommodate the increase in steam flow by 38% as described below.

Furnace: Extended walls (wing walls) welded to the front and the rear walls of the furnace will be added when the unit is converted to oxygen firing and CO_2 capture (Case 2b). The extended walls are very similar to the furnace water walls except that the tube diameter is slightly larger, 38 mm (1.5 inches) instead of 26.8 mm (1.06 inches) and the tube spacing is smaller, 51 mm (2.0 inches) compared to 58 mm (2.28 inches). These changes (as compared to the furnace water walls) are required in order to withstand the additional heat absorption, which occurs on both sides of the extended wall. The spacing between each extended wall is 870 mm (34.25 inches) and each wall is 306 mm wide (12.05 inches). Each extended wall is comprised of six (6) tubes with an outside diameter of 38mm (1.5 inches). This arrangement leads to a water mass flow rate inside the tubes which is very close to the mass flow rate before conversion to CO_2 capture although the steam flow is increased by 38%.

Figure 4-6 shows a sectional side elevation of the capture ready converted (Case 2b) CFB boiler furnace with the wing walls installed. The wing walls are shown in blue on this figure. A more complete set of drawings for the Case 2b CFB boiler is included in the Section 10.1.1.

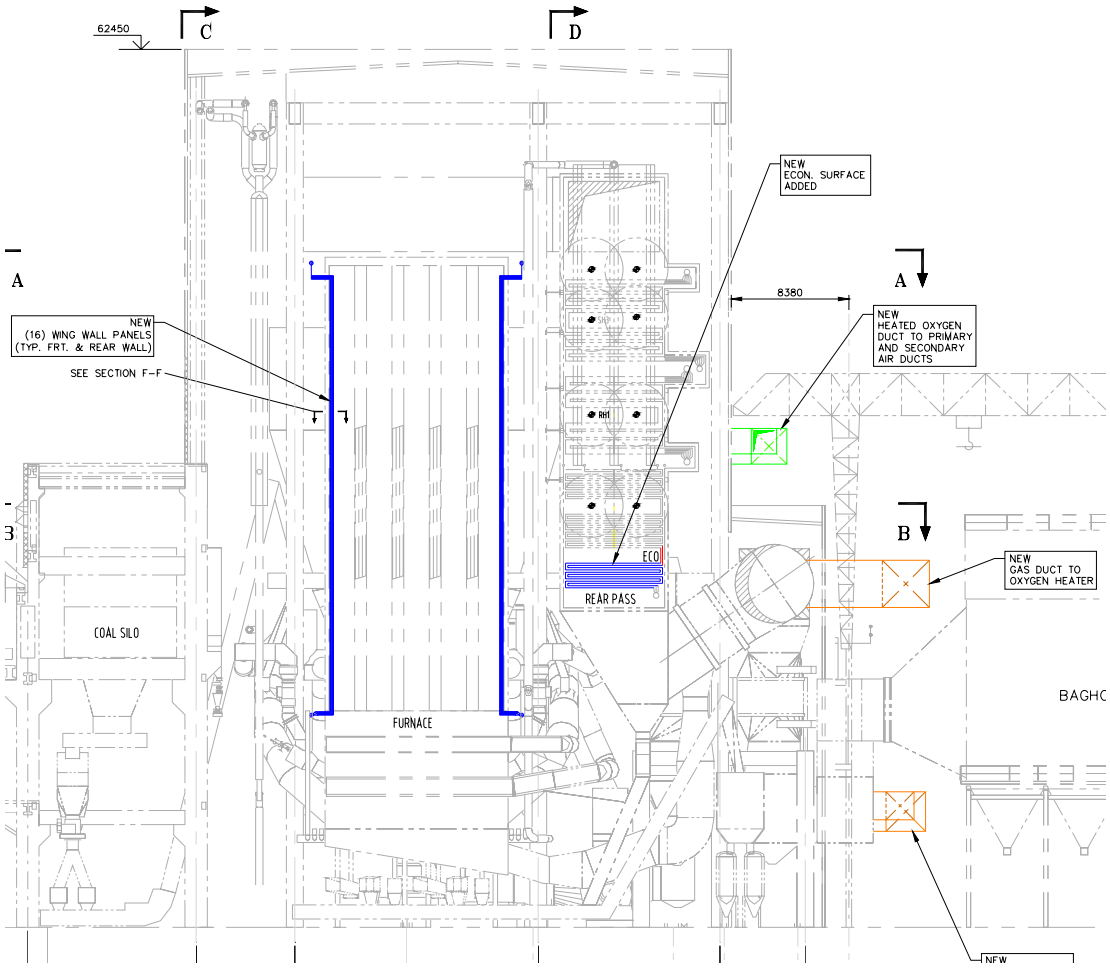

Figure 4-6: Case 2b - Sectional Side Elevation of the Capture Ready Converted CFB Boiler Showing the Wing Wall Surface Added in the Furnace and the Economizer Surface Added in the Backpass

As described in Section 4.3.3, a slightly taller furnace is required for Case 2a/2b as compared to the Base Case to accommodate the longer backpass which has additional space left for the added economizer surface as explained below. The furnace for Case 2a (and Case 2b) is therefore 1.5 meters (4.9 ft) taller than the Base Case (Case 1a).

Economizer: As described in Section 4.3.3, the backpass for Case 2a was designed to allow three (3) additional loops in the economizer circuit to be added when converted to oxygen firing and CO_2 capture (Case 2b). Figure 4-6 shows a sectional side elevation of the capture ready converted (Case 2b) CFB furnace and backpass with the additional economizer surface installed. The added economizer surface is shown in blue color on the right side of this figure at the bottom of the backpass. The economizer inlet header was also shifted to enhance the addition of the economizer surface. With this modification the flue gas temperature entering the air preheaters is kept close to the temperature before conversion.

External Fluidized Bed Heat Exchangers: As described in Section 4.3.3 The dimensions of the Case 2a external fluidized bed heat exchangers were increased (as compared to the Base Case) to allow for the addition of superheat and reheat circuit assemblies when the unit is retrofit with oxygen firing and CO_2 capture. Seven (7) superheater assemblies per FBHE will be installed when converting Case 2a to oxygen firing and CO_2 capture (Case 2b).

Also, the external heat exchanger bed where the finishing reheat section is located will be modified with the addition of thirteen (13) reheater assemblies when Case 2a is converted to oxygen firing and CO_2 capture (Case 2b). This arrangement maintains the ash flow through the external bed about the same as for the Base Case as well as the pressure drop along the reheat steam flow path.

Figure 4-7 shows the added surface for the external fluidized bed heat exchangers.

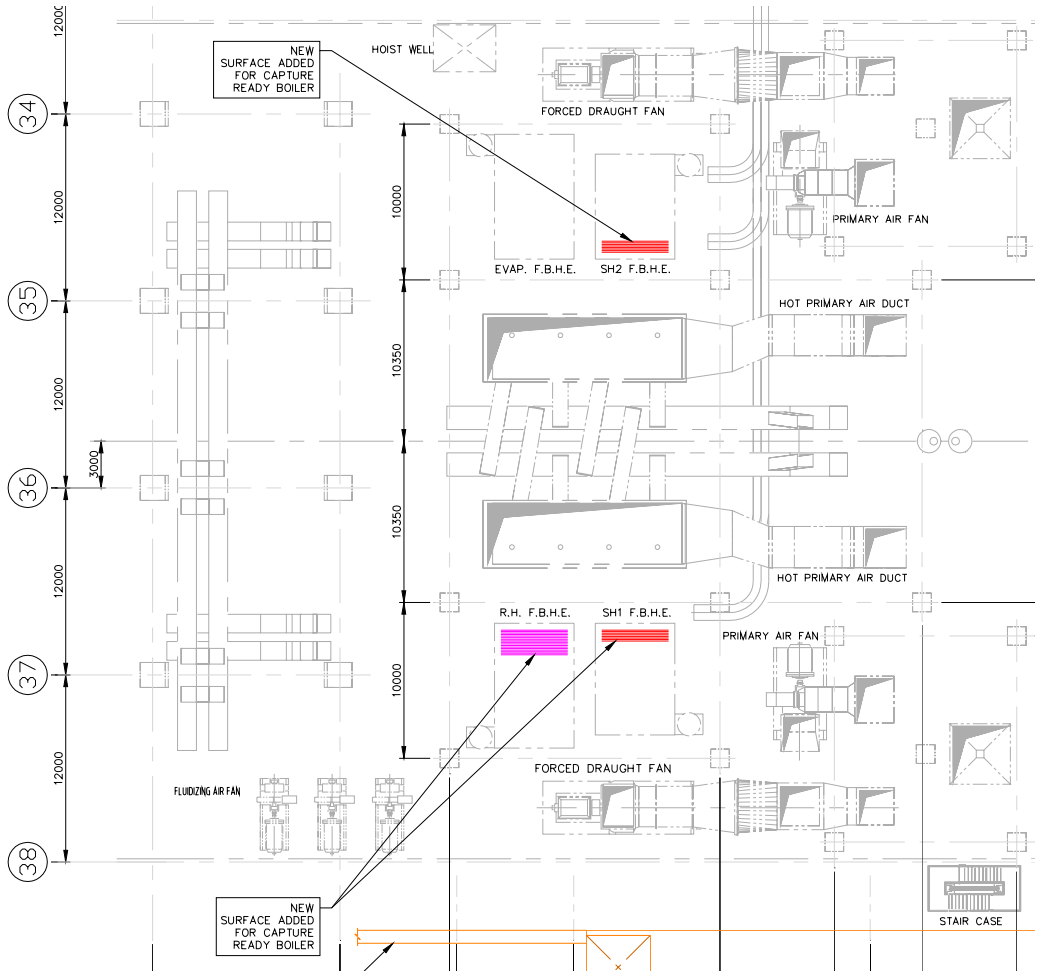

Figure 4-7: Case 2b – Plan View Showing Modified External Fluidized Bed Heat Exchangers

4.5.3.2 Coal Feeding System:

As described in Section 4.3.3, no modifications are required for the coal feeding system since the coal feeding system for Case 2a (Capture Ready) is sized with a 33% margin before conversion to accommodate the increased coal flow when the unit is retrofit with O_2 firing and CO_2 capture.

4.5.3.3 Bottom Ash Removal System:

As described in Section 4.3.3, the capacity of the bottom ash removal system is defined by the operation before conversion (Case 2a) where the SO_2 capture is achieved by limestone injection into the furnace. Therefore, no modifications are required for the bottom ash removal system when the unit is retrofit with O_2 firing and CO_2 capture (i.e. Case 2b).

4.5.3.4 Air Preheaters:

As described in Section 4.3.3, two identical regenerative air heaters were selected for the Capture Ready case (Case 2a) and arranged in parallel flue gas streams. When the unit is retrofit with oxygen firing and CO_2 capture (Case 2b), a tubular oxygen heater and its associated ductwork (oxygen to and from; flue gas to and from) is added in a third parallel flue gas stream. Figure 4-8 shows the added tubular oxygen heater and its associated ductwork.

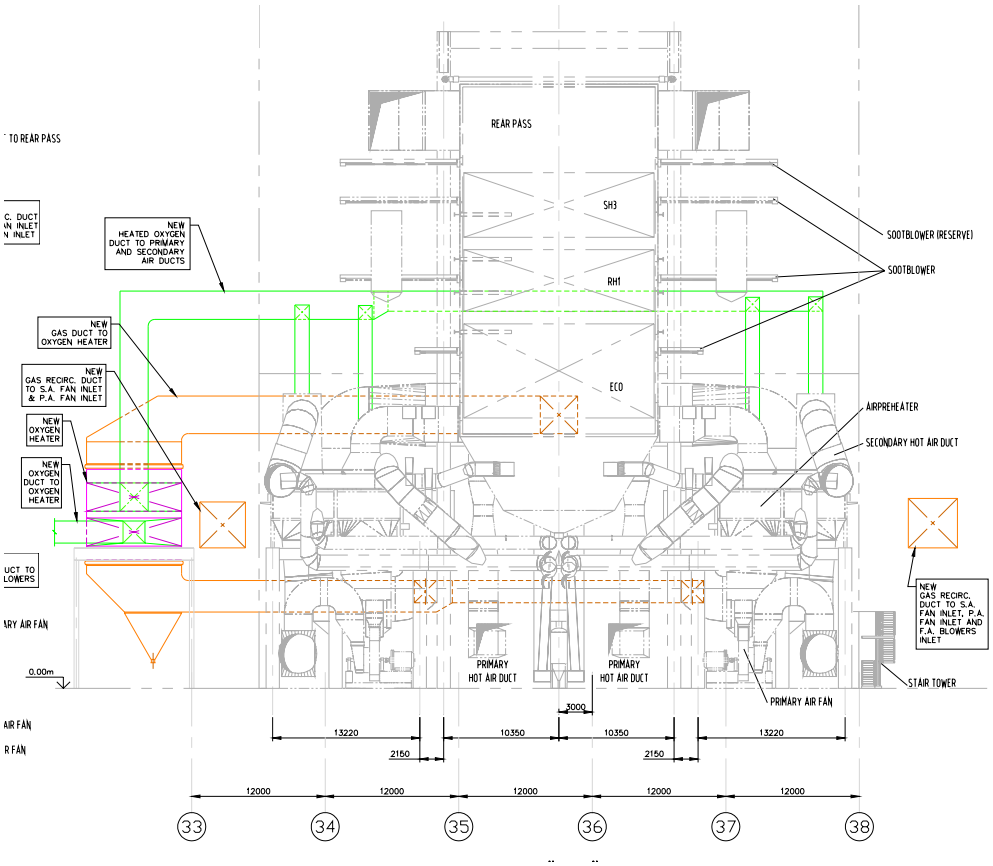

Figure 4-8: Case 2b – Section View Showing the Added Tubular Oxygen Heater and its Associated Ductwork

This heater will be used for heating the oxygen supplied by ASU. This third parallel flue gas stream is in parallel with the two regenerative air heaters.

After the retrofit, the regenerative air heaters will be used for heating the cool recirculated flue gas coming from the PA and SA fans. Heated oxygen, leaving the tubular oxygen heater, will be blended into the hot recirculated flue gas leaving the regenerative air preheaters before the mixture is introduced to the furnace. The oxygen from the ASU will be provided at the needed pressure for mixing with the flue gas leaving the regenerative air preheaters.

4.5.3.5 Modified Draft System:

As described in Section 4.3.3, the draft system comprises all the fans and blowers (primary air fan, secondary air fan, fluidizing air blowers, and induced draft fan), ductwork, dampers, expansion joints, etc., that supply air to and remove flue gas from the unit. This system must be modified such that the boiler can operate in the air-fired mode for start-up and in the new

oxygen-fired mode with gas recirculation for CO_2 capture. The system also must be flexible enough to allow the on line transition between air and oxygen firing.

Fans and Blowers: The forced draft system (PA & SA fans, FA Blowers) will be handling recirculated flue gas rather than air during O_2 fired operations. The recirculated flue gas has a higher molecular weight (more CO_2 and less N_2) and a higher inlet temperature to the fans and blowers than air. The recirculated flue gas, even with the higher inlet temperature to the fans, has an increased density. Taking all these differences into consideration, the existing primary air fan, secondary air fan, and fluidizing air blowers (FBHE and Seal Pot blowers) will easily accommodate the new operating conditions expected with O_2 firing and therefore will not require any modifications

Although the ID fan will also be handling the increased density flue gas, it must now additionally accommodate a larger pressure rise across the fan. The increased system draft loss is due primarily to the addition of the flash dryer absorber (FDA) system for SO_2 removal. Because of the increased draft losses, a new ID fan and motor are required for Case 2b.

New and Modified Ductwork: Significant modifications and additions are required to the Case 2a plant ductwork system in order to accommodate the new gas recirculation system, FDA system, Oxygen heater, and the addition of O_2 firing capability as described below. New ductwork is required in several areas of the Boiler Island. Oxygen supply control valves and piping from the new ASU to the existing primary and secondary air heater outlet ducts is required. New ductwork with control and isolation dampers is also required for the recycle flue gas streams that feed the primary and secondary air fans and the existing fluidizing air blowers. Ductwork is also modified to accommodate the new oxygen heater and FDA system. Additionally, new ductwork and dampers are required to supply product gas (primarily CO_2) to the new Gas Processing System. Various isolation dampers are also required. Provisions in the new ductwork system to accommodate startup with air firing (air inlet duct with associated isolation dampers) are also required.

4.5.3.6 Modified Controls and Instrumentation for the Boiler Island:

As described in Section 4.3.3, additional controls and instrumentation will be required for the new components and systems. The transition between air firing and oxygen firing as well as additional safety precautions associated with oxygen use in this type of setting needs careful consideration.

4.5.3.7 Modified Desulfurization System:

In Case 2a (capture ready) a traditional furnace limestone injection system is used to remove about 90 percent of the SO_2 produced. For the oxygen fired Case 2b, limestone is not added to the furnace. Instead, sulfur capture is done in a backend Flash Dryer Absorber (FDA) system with lime injection. This requires the same types of modifications as described for this system in Section 4.3.3.

4.5.3.8 Major New Equipment Added:

The major new equipment added to the boiler island is the air separation unit (ASU) to provide oxygen to the boiler and the gas processing system (GPS) to purify and compress the CO_2 product gas.

5 STEAM TURBINE DESIGN AND PERFORMANCE

This section briefly describes the designs and or modifications of the steam turbines. Also shown is the performance of the steam cycles in terms of material and energy balances (i.e. turbine heat balance diagrams).

With respect to the steam turbine, the basic study was focused on specifying the optimal steam turbine hardware scope including details, dimensions, weights and boundary conditions for the conceptual power plants. Three cases have been investigated as follows:

- Case 1a is the Base Case, which is a supercritical 680 MWe (nominal) unit.
- Case 2a is similar to the Base Case, except that provisions are made in the design to accommodate a future increase in steam flow of 38%.
- Case 2b represents the Case 2a steam turbine retrofit for the increased steam flow.

The steam turbines evaluated in this study are based on a standard ALSTOM supercritical unit typical of the types of steam turbines being offered to potential operators of coal-fired power stations in the US.

5.1 Capture Ready Steam Turbine

The Capture Ready steam turbine consists of components selected from the ALSTOM RT-Series of standard turbine modules. The primary design constraint for the Capture Ready steam turbine is that it must be capable of being upgraded to expand an additional 38% steam flow when the plant is converted to oxygen firing and CO_2 capture. The IP Turbine Module is designed from the outset to be capable of swallowing the additional steam flow required for future “capture ready converted ” operation. The standard LP Turbine Module is also fully capable of swallowing the additional steam flow required for “capture ready converted” operation. The HP steam turbine however is designed for 100% flow.

5.2 Capture Ready Converted Steam Turbine

The Capture Ready Converted (converted to oxygen firing and CO_2 capture) steam turbine operated in the future would comprise the Capture Ready steam turbine train described above incorporating a retrofitted HP steam turbine, which is designed for 138% flow. In order to achieve this, the HP Turbine Module would require upgrading by means of a HP Turbine Inner Block Retrofit. Additionally, the recovery and integration of low-level heat from the ASU and GPS must be accommodated. This modification will reduce the extraction flows to the LP feedwater heaters. Finally, the generator would be replaced with a unit of the required capacity as shown in the Appendix (Section 10.1.2), Figure 10-3.

An additional constraint, with respect to the capture ready converted steam turbine, is that the main steam pressure entering the HP turbine must not be increased as compared to the capture ready operating condition when this additional 38% steam flow is expanded. This is a requirement in order not to exceed the design pressure for the existing boiler pressure parts, steam/feedwater piping, etc.

5.2.1 HP Inner Block Retrofit

The HP Inner Block Retrofit would make use of the existing outer casing and various other existing equipment (described below) supplied with the original turbine. A typical cross sectional view of the retrofit is shown in Figure 5-1. The colored sections (blue, red, gray, and yellow) comprise the equipment that would be replaced in the HP Inner Block Retrofit.

Key:
Red - Shrink Rings
Gray - Inner Casing
Yellow - Fixed and Moving Blades
Blue - Rotor plus integral coupling

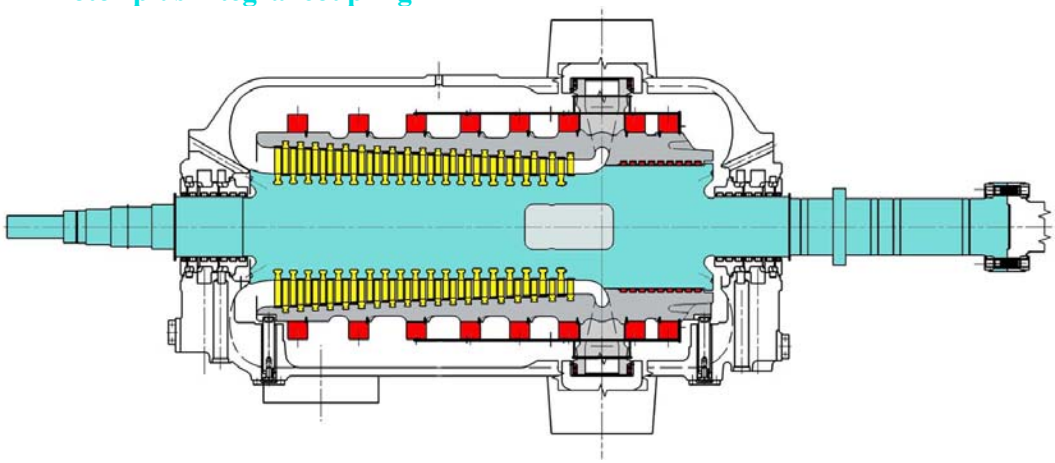

Figure 5-1: Typical HP Inner Block Retrofit Cross Section

A typical new equipment scope of supply for a HP Inner Block Retrofit would be as follows:

- One (1) drum type HP rotor with integral coupling, fully bladed, high-speed balanced and over-speed tested to 120% of nominal speed, including piston sealing.
- One (1) new HP inner casing of ALSTOM design, fully bladed, shrink rings, heat shields, pre-assembled.
- Four (4) sets of steam seals at the HP inlet interfaces.
- One (1) complete set of shims, keys and spacers necessary to fit and align new components to existing stationary components.

The following existing equipment delivered with the original steam turbine would be re-used after retrofitting the HP turbine:

- Existing outer casing
- Inlet pipes (welded to steam ducts)
- HP stop- and control valves
- HP shaft glands housing and gland steam system
- Bearing pedestals and bearings
- Turning gear, main oil pump
- Governing and control devices
- Instrumentation related to reused components

The HP Inner Block Retrofit is delivered to the site as an assembled module. The concept of the "drop in solution" for the HP inner Block Retrofit is illustrated in Figure 5-2.

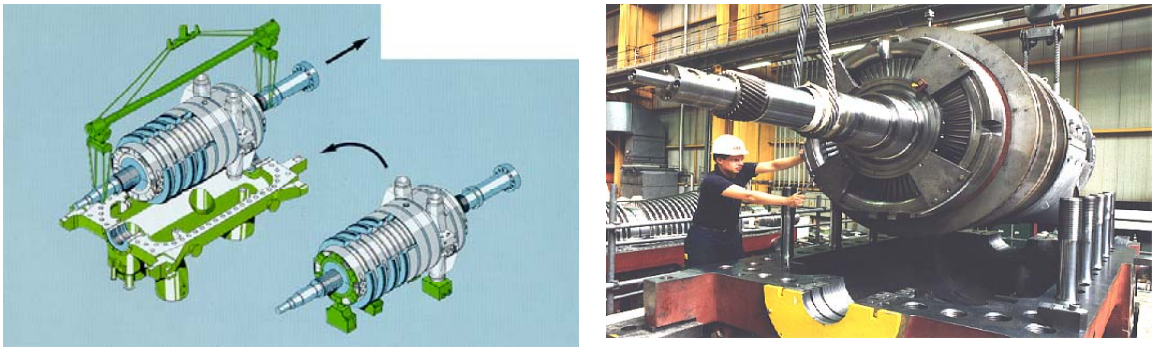

Figure 5-2: HP Inner Block Retrofit Illustrating "Drop In Solution"

5.3 Steam Turbine/Generator Layout Drawings

The layout plan drawings for the steam turbine/generators are shown in Section 10.1.2. The steam turbine external dimensions are identical for all Cases (1a, 1b, 2a, and 2b) as shown in dFigure 10-1 and Figure 10-2. The generator external dimensions are identical for Cases (1a, 1b, and 2a) as shown in Figure 10-1 and Figure 10-2. The generator external dimensions are larger for Case 2b as shown in Figure 10-3.

5.4 Steam Turbine Heat Balances

Turbine heat balance diagrams for the three cases described above (Case 1a, 2a, and 2b) are shown in Figure 5-3, Figure 5-4, and Figure 5-5 respectively. A turbine heat balance diagram was not developed for Case 1b since it is very similar to Case 1a except for the recovery and integration of the low-level heat from the ASU and GPS. Table 5-1 shows a summary of main steam flows pressures and generator outputs for the four cases.

Table 5-1: Summary of Steam Flows, Pressures and Generator Outputs

	MAIN STEAM FLOW (K-LBM/HR)	MAIN STEAM PRESSURE (PSIA)	GENERATOR OUTPUT (KW)
Case 1a – Base Case Turbine	4,409	3,590	677,489
Case 1b – Base Case Turbine with Low Level Heat Recovery (LLHR)	4,409	3,590	692,293
Case 2a – Capture Ready Turbine	4,409	3,590	677,999
Case 2b – Case 2a Turbine Converted for 138% steam flow and LLHR	6,088	3,590	895,377

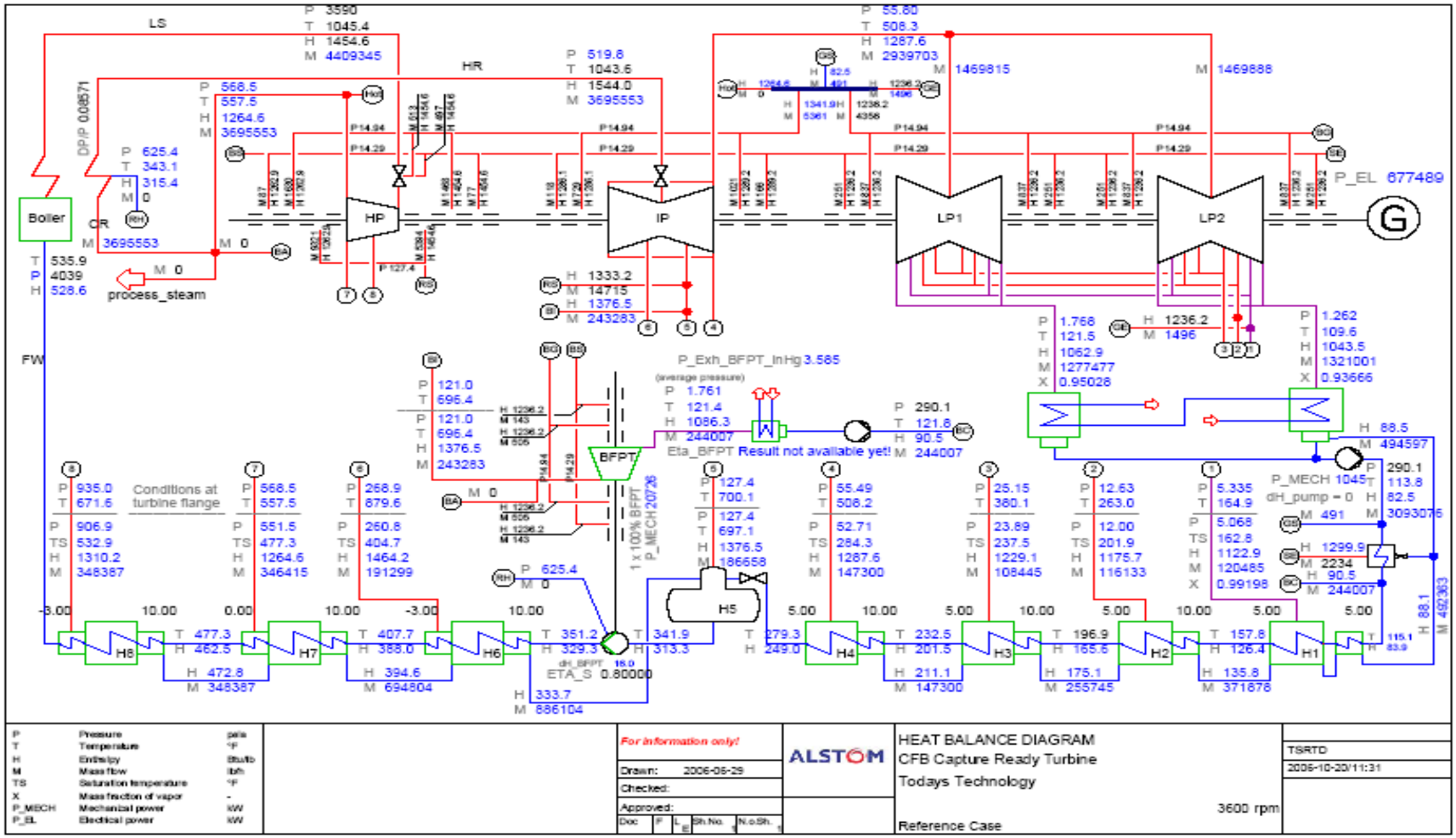

Figure 5-3: Case 1a (Base Case) Turbine Heat Balance Diagram

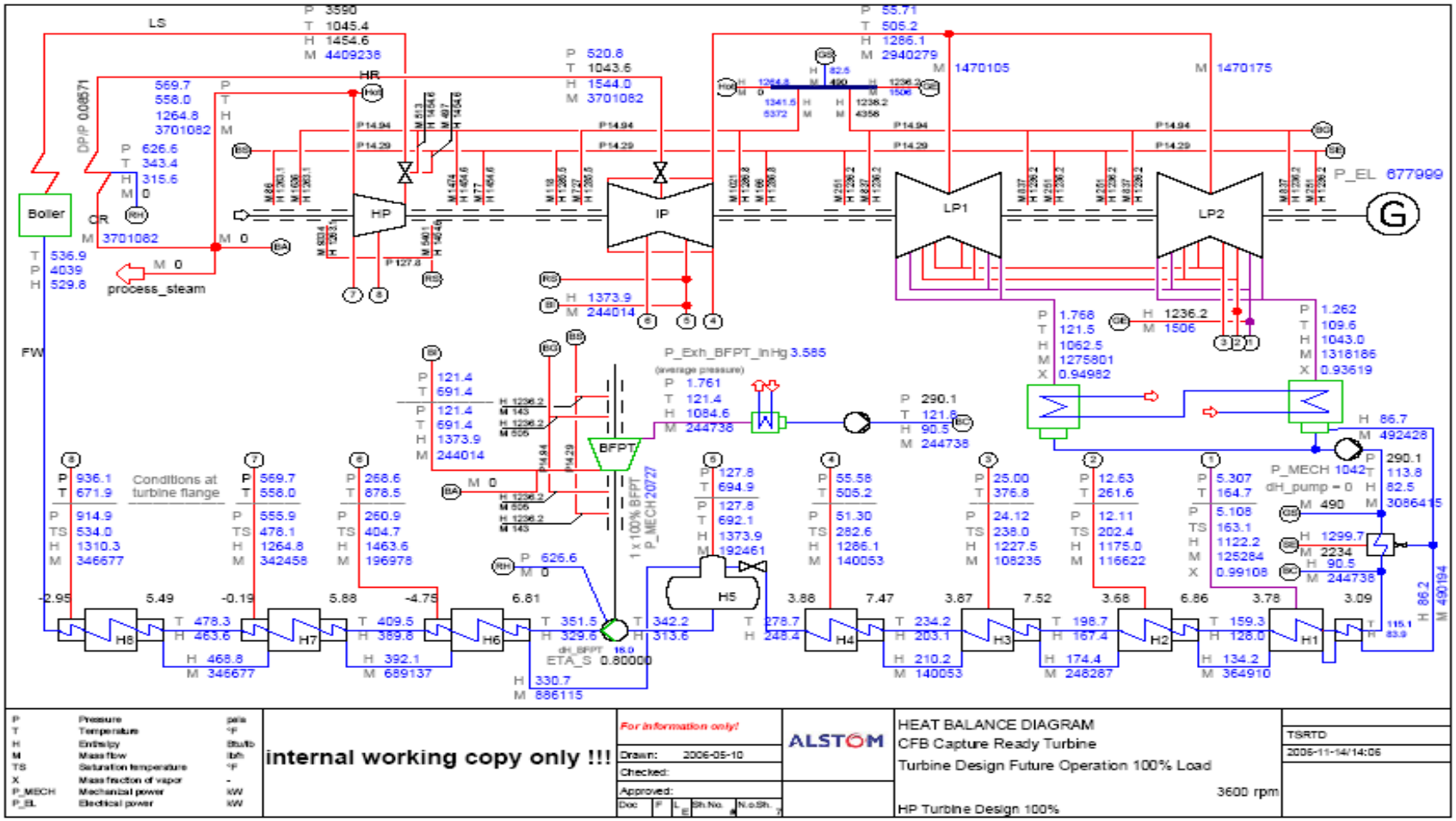

Figure 5-4: Case 2a Capture Ready Turbine Heat Balance Diagram

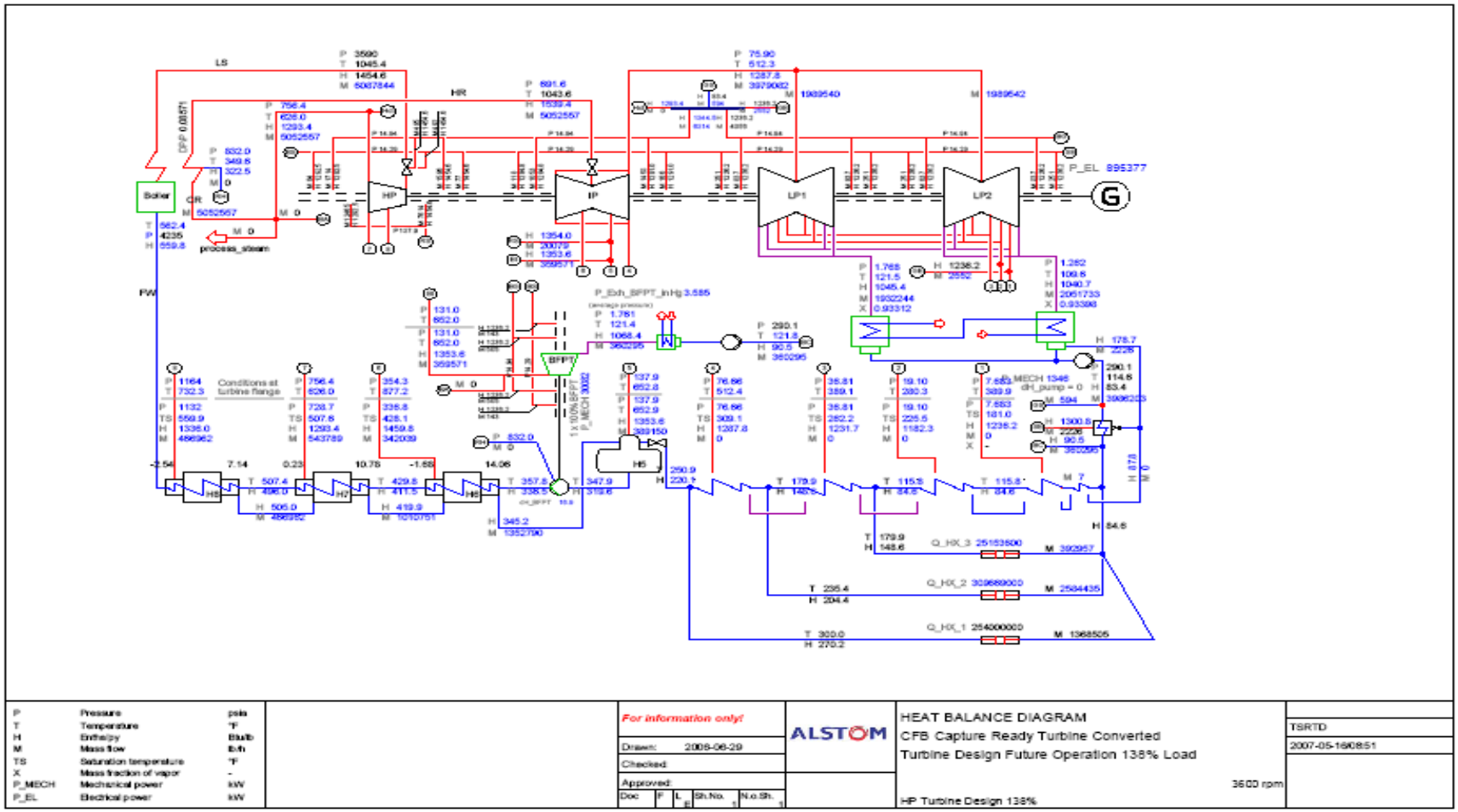

Figure 5-5: Case 2b Capture Ready Converted Turbine Heat Balance Diagram

6 BALANCE OF PLANT DESIGN AND PERFORMANCE

This section describes the conceptual designs of the equipment included in the balance of plant (BOP) systems for the four power plants. The BOP systems for the four cases in this study include everything except the CFB boilers, the steam turbine generator, and the particulate and sulfur removal system. Other exceptions for the CO_2 capture cases (Case 1b and 2b) include the air separation unit and the gas processing system.

6.1 Air Separation Unit

Commercial cryogenic air separation units (ASU's) are highly energy-intensive, consuming, in auxiliary power, large amounts of the gross plant electric power output. For example, the cryogenic ASU used in conjunction with the work discussed in Volume I of this report (Section 4.4.7) required 233 kWh/ton of oxygen supplied or about 17.2 percent of the steam turbine generator output is attributable to operating the ASU.

Hence, the information on the design, performance and cost analysis of a special cryogenic air separation unit (ASU) developed by Anheden and Morin (2004) was used in conjunction with the present study. Anheden and Morin state that the configuration of an air separation unit (ASU) is dependent upon the product requirement in terms of flow rates, state (i.e., liquid or vapor), and purity. As an example, if nitrogen is a desired product, then the process must guarantee a required purity. Otherwise, it (the nitrogen) can be vented off to atmosphere. ASU configurations are also application-specific. That is, in oxy-combustions plants, they are designed to supply the oxygen at almost atmospheric pressure; whereas, in IGCC, they are designed to supply the oxygen and nitrogen at elevated pressures (e.g., 50, and 20 bar, respectively).

The ASU configuration used by Anheden and Morin (2004) for oxy-CFB application is depicted in Figure 6-1. This configuration, which includes two reboilers in the low-pressure column, is explained as follows: "The lower of them condenses partially the air coming from the main compressor against the liquid at the bottom of the lower pressure column. A fraction of this air is distilled in the medium-pressure column. The upper reboiler vaporizes a low-pressure oxygen-rich mixture against hotter pure nitrogen from the medium-pressure column. In this way, required state-change temperature for the double distillation can be reached at a global lower pressure. Therefore, a significantly lower amount of compression energy should be required." For details on the design of this special ASU, see Anheden and Morin (2004).

As shown in Table 6-1, this ASU is designed to supply to Case 2b Oxy-CFB plant (Capture-Ready Converted) 14,295 tonnes/day O_2 of 99.8% purity and is at 18 °C temperature and 1.3 bara pressure. This ASU required about 180 kWh/ton O_2, as shown previously in Section 3.2 (Power Plant Performance Summary and Comparison). This auxiliary power consumption represents an improvement of 23% over the ASU described in Volume I (i.e., 180 vs. 233 kWh/ton O_2).

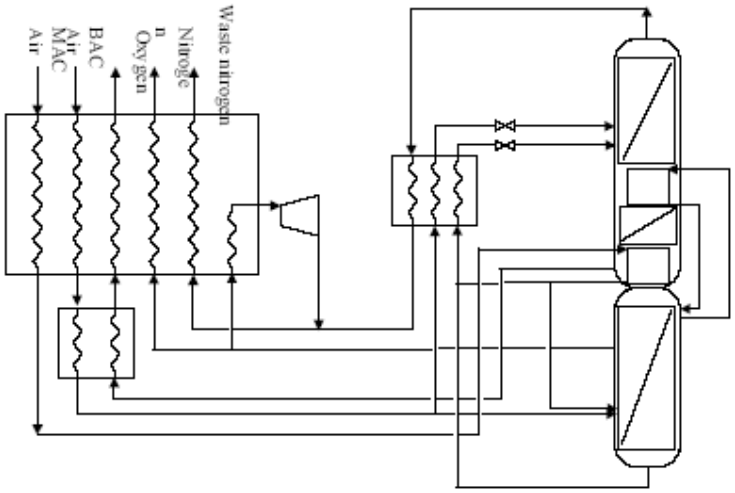

Figure 6-1: ASU Schematic with Two Reboilers

Table 6-1: ASU Oxygen Production and Purity

Plant Site	Case #	O_2 Supply Capacity		O_2 Temperature		O_2 Pressure		O_2 Purity
		Tonne/Day	Ton/Day	°C	°F	Bara	Psia	(%)
Southeast USA	Case 1b	10,998	12,098	18	65	1.3	19	99
	Case 2b	14,295	15,724	18	65	1.3	19	99

6.2 Gas Processing System

The purpose of the Gas Processing System (GPS) for this project is to process the flue gas stream leaving the oxygen-fired Boiler Island to provide a liquid CO_2 product stream of suitable conditions for enhance oil recovery (EOR) application. The GPS first cools and then compresses a CO_2 rich flue gas stream from an oxygen-fired CFB boiler to a pressure high enough so CO_2 can be liquefied. The resulting liquid CO_2 is passed through a CO_2 distillation column to reduce the N_2 and O_2 content to meet the stringent specification noted in Table 6-2. Then the liquid CO_2 is pumped to a high pressure so it can be economically transported for usage or sequestration. The overhead gas from the CO_2 distillation column condenser outlet is ultimately vented to atmosphere. This system has been described in detail in Section 4.4.4 of Volume I of this report

This CO_2 capture system is designed for more than 94 percent CO_2 capture from the GPS feed stream. Process design, equipment selection, performance calculations and cost estimates were developed for all the systems and equipment required for cooling, purifying, compressing and liquefying of the CO_2 rich flue gas stream to a product quality acceptable for pipeline transport. The Dakota Gasification Company's CO_2 specification for EOR (Dakota Gasification Company, 2005), given in

Table 6-2, was used as the basis for the CO_2 capture system design. The calculated volume percent values for the product stream using the gas processing system described in section 4.4.4

of Volume I are shown for comparison in the far right column of

Table 6-2. As shown, the CO_2 product meets or exceeds all of the specification values.

Table 6-2: Dakota Gasification Project's CO_2 Specification for EOR and the Calculated Product Stream Purity

Component	(units)	Spec Value	Actual Value
CO_2	(vol %)	96	99.8
H_2S	(vol %)	1	---
CH_4	(vol %)	0.3	---
C_2 + HC's	(vol %)	2	---
CO	(vol %)	---	---
N_2	(ppm by vol.)	6000	19.0
H_2O	(ppm by vol.)	2	0.5
O_2	(ppm by vol.)	100	95.0
Mercaptans and other Sulfides	(vol %)	0.03	---

6.3 Coal Handling System

The function of the coal handling system is the same in all cases. It is to provide equipment necessary for unloading, conveying, preparing, and storing the fuel delivered to the plant. The scope of the system is from the coal delivery point up to the boiler day bin inlet. A typical coal handling system is depicted in Figure 6-2. Although this figure shows a barge discharging the coal into a conveyor belt, this particular study used a railroad system for coal supply.

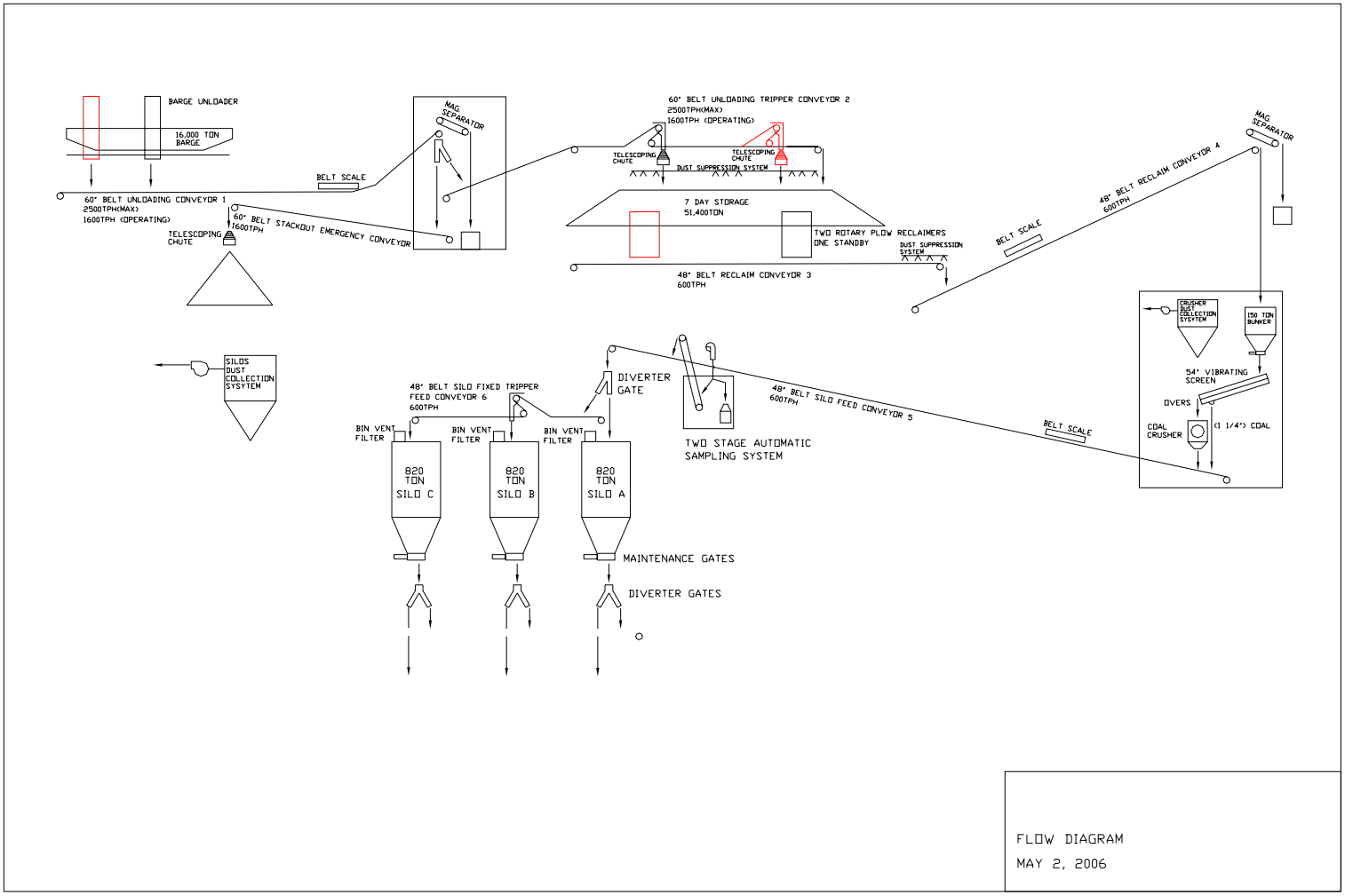

Figure 6-2: Depiction of Typical Coal handling System

The coal handling system utilizes belt conveyors, variable speed belt feeders, magnetic separators, enclosed conveyor galleries, open pile storage, crusher house, unloading building, and dust collection at all transfer points. The materials of construction are industrial grade and include stainless steel liners at coal impact areas. The Coal Unloading Building and Crusher House have aluminum box-beam siding.

The coal handling system will be designed to handle coal with characteristics as presented in Table 6-3.

Table 6-3: Design Coal

Constituent	Units	Weight Fraction
O2		0.0316
N2		0.0146
H2O		0.0399
H2		0.0357
Carbon		0.6205
Sulfur		0.0234
Ash		0.2343
Total		**1.0000**
HHV Coal	(Btu/lbm)	11,070
	(kJ/kg)	23,132

The 2" x 0 medium volatile bituminous coal is delivered to the site by unit trains of 100-ton rail cars. Each unit train consists of one hundred 100-ton rail cars. The unloading is done by a trestle bottom dumper, which unloads the coal into two receiving hoppers. Coal from each hopper is fed directly onto a belt feeder. The 2" x 0 coal from the feeder is discharged onto a belt conveyor (Conveyor No. 1). The coal is then transferred to a second conveyor (Conveyor No. 2) that transfers the coal to the reclaim area. The conveyor passes under a magnetic plate separator to remove tramp iron, and then to the double wing traveling stacker that forms active storage and long-term storage coal piles. Coal is spread over the long-term pile storage area by mobile equipment.

Coal from the active storage pile is reclaimed by a rotary plow located under the pile onto a reclaim belt conveyor located in a tunnel. The reclaim conveyer discharges coal onto the belt conveyer (Conveyor No. 3), which transports the coal to the coal surge bins located in the crusher tower. The coal is reduced in size by two coal crushers (see Table 6-4) and transferred by conveyor (Conveyor No. 4) to the as-fired coal-sampling tower.

Table 6-4: Required Coal Size Distribution

Cumulative Weight Passing	Particle Size
100%	< 12,000 micron
90%	< 5,000 micron
50%	< 1,350 micron
10%	< 160 micron

Another belt conveyor (Conveyor No. 5) transfers the crushed coal to the transfer tower. In the transfer tower, the coal is routed to the tripper that loads the coal into one of the parallel boiler bunkers for Circulating Fluidized Bed Boiler # 1 (CFB # 1) and Circulating Fluidized Bed Boiler # 2 (CFB # 2).

From the long-term storage pile, coal can be reclaimed via an emergency reclaim hopper, belt feeder, and emergency reclaim conveyor.

The coal handling system is based on the handling rates, capacities, and frequencies presented in Table 6-5.

Table 6-5: Coal Handling System Design Basis

	Case 1a	Case 1b	Case 2a	Case 2b
Coal feed rate (two boilers at MCR), tons/hour	255	260	255	338
Coal delivery, days/week	5	5	5	6
Coal handling crew operation, hours/day	16	16	16	24
Active storage pile capacity, days of operation at MCR	7 (43,000 tons)	7 (43,000 tons)	7 (43,000 tons)	5 (43,000 tons)
Long term storage pile capacity, days of operation at MCR	30 (184,000 tons)	30 (184,000 tons)	30 (184,000 tons)	30 (244,000 tons)

The coal handling system equipment sizing is the same for all cases. However, for the Case 2b system the operating hours will be increased to accommodate the approximately 34% higher coal feed rate.

6.4 Sorbent Handling System

Limestone will be utilized as the sulfur absorbing agent in the air-blown CFB designs (Cases 1a and 2a), and lime in the oxygen-blown designs (Cases 1b and 2b). As a part of the Oxyfuel conversion, the lime handling system is added and the limestone handling equipment is removed from operation and abandoned in place. During startup of the oxygen fired boilers, while in the air-fired mode, Cases 1b and 2b will use lime as the sulfur absorbing agent. Descriptions of the limestone and lime handling systems are provided in this section.

6.4.1 Limestone Handling

The limestone will be used as a sulfur-absorbing agent in the air-blown CFB boilers (Cases 1a and 2a). The function of the limestone handling and preparation system is to receive, store, convey, and grind the limestone delivered to the plant.

The limestone handling system is designed to handle limestone with analysis as presented in. System design is based on assumed limestone bulk density of 80 lb/ft^3.

Table 6-6: Limestone Analysis

Constituent	Weight Fraction
$CaCO_3$	0.9830
Moisture	0.0000
Ash	0.0170
Total	1.0000

The limestone handling system will receive limestone delivered to the site by trucks, crush it to an appropriate size for injection in the CFB boilers, and transfer it to the prepared limestone silos (day bins) adjacent to each CFB boiler. The system also maintains a 7-day supply of uncrushed limestone in pile storage on site as a reserve against disruptions in delivery.

The Limestone Handling System is designed to receive 2”x 0 limestone. Limestone is received by trucks and discharged into an underground receiving hopper. Limestone is transported from the receiving hopper and discharged onto a stacking belt conveyor using a belt feeder. The stacking conveyor transports the limestone, and discharges it into an open pile with 7-day storage capacity (~4,800 tons).

The reclaim conveyor transports the coarse limestone to a surge hopper with shutoff gates. Limestone is transported from the surge hopper outlet via belt feeder and discharged into a crusher, where the limestone is reduced from a feed size of 2”x 0 to net output size as presented in Table 6-7.

Table 6-7: Required Limestone Size Distribution

Cumulative Weight Passing	Particle Size
100%	< 2,400 micron
90%	< 650 micron
50%	< 275 micron
10%	< 35 micron

The sized limestone is then transported to two (2) limestone storage silos (one for each CFB), using an enclosed belt conveyer.

The system includes a dust suppression system for the receiving hopper, and a dust collection system for the crusher.

6.4.2 Lime Handling

The lime will be used as the sulfur-absorbing agent in the Flash Dryer Absorbers (FDA) of the oxygen-blown CFB boilers (Cases 1b and 2b). The lime handling system receives lime delivered to the site by trucks and pneumatically transports it to the lime storage silos adjacent to each CFB. The lime storage silos are equipped with blanketing systems to prevent contact with moist air. The lime will be delivered already prepared. Its sizing will be ~1/4" x 0. The lime handling system boundaries are from the quick disconnect fitting at the truck receiving station up to, but not including, the lime day bins at each boiler. The lime handling system will require trucks with mounted blowers.

From the storage silo, lime will be pneumatically transported to the day bins at the CFB absorber areas. The system also maintains a 7-day supply (~3,400 tons) of prepared lime in a storage silo on site as a reserve against disruptions in delivery.

6.5 Ash Handling System

The ash handling system consists of two main sub-systems: (1) the bottom (bed) ash system and (2) the fly ash system. Bed and fly ash are handled separately and stored in a dry state in dedicated silos. The material is conveyed pneumatically by a positive pressure pneumatic system. Each type of ash is conveyed in a separate pneumatic system from its source collection point to an air separator located on the top of each collection silo, and from there it is loaded into a truck for offsite disposal. The ash handling system is sized to serve two CFB boilers simultaneously firing at their maximum continuous rate. To reduce fugitive dust, the area for ash loading into vehicles is sheltered. This area is equipped with a ventilation system connected to the baghouse. Ash is discharged from the silo to the surge hopper by a screw feeder that operates in a batch mode. From the surge hopper ash is discharged to a truck through a rotary dust-conditioning unloader.

6.5.1 Bed Ash

The Bed Ash Handling system is designed to sequentially remove dry free flowing ash from the CFB boiler interface points, transport it, and store it in an ash storage silo. The system will include provisions to condition (mix with water) the ash, and discharge the conditioned ash into dump trucks.

The system will be a dilute phase pressurized system. Bottom ash will be drained from each collection point and fill airlock vessels (lock hoppers), one for each collection point. Upon reaching a level in the airlock vessel hopper, the inlet valve will close stopping the filling process. The controls will sequence and cycle the airlock vessels, from which ash is pneumatically transported by compressed air to the bed ash storage silo. Ash is separated from the conveying air by a primary cyclone separator followed by a pulse jet type bag filter. The storage silo arrangement will be equipped with an elevated outlet, fully fluidized bottom, an internal platform to hold the batch ash conditioner, and a skirt with a large opening for a truck drive through.

The system includes a pressure blower, ash airlock assemblies, fluidizing silo bottom blower, material transport piping, clean air piping, 5,200-ton capacity concrete storage silo, bin-vent filter, batch ash (wet-out) system, mixer discharge chute, supports, etc.

The bed ash handling system design is based on the handling rates, capacities, and frequencies presented in Table 6-8.

Table 6-8: Bed Ash System Design Basis

	Case 1a	Case 1b	Case 2a	Case 2b
Total Ash generated [1], tons/hour	93	94	93	122
Bed Ash Operating flowrate, tons/h	28	28	28	68
Bed Ash Design Capacity, tons/h [2]	65	65	65/85	85
Bed Ash removal, days/week	5	5	5	6
Bed Ash removal, hours/day	12	12	12	14
Bed Ash silo storage capacity, hours of operation at MCR	72 (5,200 tons)	72 (5,200 tons)	72 (5,200 tons)	55 (5,200 tons)

[1] Total bed and fly ash generated by two boilers at a Maximum Continuous rating (MCR)
[2] Designed to handle 70% of total ash production

For the capture ready design (Case 2a), the bed ash system piping is sized based on the increased bed ash design flowrate of the plant converted to oxygen firing operation (Case 2b).

As a part of Oxyfuel conversion and to accommodate the increased design flowrate, a third bed ash air compressor will be added.

6.5.2 Fly Ash

The Fly Ash Handling system is designed to sequentially remove dry free flowing ash from the baghouse hoppers. The fly ash is collected in multiple collection points at the bottom hopper connections of the bag filters. The system will be a dilute phase pressurized system.

Ash is withdrawn from each hopper thorough a fly ash airlock vessel and pneumatically transported under positive pressure to the Fly Ash storage silo.

The cyclone separators and bagfilters separate the fly ash from the conveying air. The storage silo arrangement will be equipped with an elevated outlet, fully fluidized bottom, an internal platform to hold the batch ash conditioner, and a skirt with a large opening for a truck drive through. The system will include provisions to condition (mix with water) the ash, and discharge the conditioned ash into dump trucks.

The system includes a pressure blower, fluidizing silo bottom blower, material transport piping, clean air piping, filter/separator, 5,200-ton capacity concrete storage silo, bin-vent filter, batch ash (wet-out) system, mixer discharge chute, supports, etc.

The fly ash handling system design is based on the handling rates, capacities, and frequencies presented in Table 6-9.

Table 6-9: Fly Ash Handling System Design Basis

	Case 1a	Case 1b	Case 2a	Case 2b
Total Ash generated [1], tons/hour	93	93	93	122
Fly Ash Operating flowrate, tons/h	65	65	65	55
Fly Ash Design Capacity, tons/h [2]	65	65	65/85	85
Fly Ash removal, days/week	5	5	5	6
Fly Ash removal, hours/day	12	12	12	14
Fly Ash silo storage capacity, hours of operation at MCR	72 (5,200 tons)	72 (5,200 tons)	72 (5,200 tons)	55 (5,200 tons)

[1] Total bed and fly ash generated by two boilers at a Maximum Continuous rating (MCR).
[2] Designed to handle 70% of total ash production.

For capture ready design (Case 2a) fly ash system piping is sized based on increased fly ash design flowrate of the plant converted to oxygen firing operation (Case 2b). As a part of the Oxyfuel conversion and to accommodate the increased design flowrate, a third fly ash air compressor will be added.

6.6 Supercritical Steam Turbine System

The steam turbine for all four of these supercritical cases is equipped with six non-automatic steam extractions, which along with the HP and IP sections exhausts provide steam for four low pressure (LP) feedwater heaters, deaerator and three high pressure (HP) feedwater heaters. All feedwater heaters (except the deaerator) are closed type. The condensate drains from the low-pressure heaters (#1 through #4) are cascaded to the condenser. The condensate drains from the high pressure heaters (#6 through #8) are cascaded to the deaerator. The deaerator storage tank provides suction to the boiler feedwater pumps. Heater #7 is on the cold reheat extraction and heater #8 is a heater above the reheat point (HARP).

6.6.1 Condensate System

The function of the condensate system is to pump condensate from the condenser hot well to the deaerator, through the gland steam condenser and the low-pressure (LP) feedwater heaters. The condensate system is sized to service the total plant, and consists of one main dual-pressure condenser; two 100 percent capacity, variable speed electric motor-driven vertical condensate pumps; one gland steam condenser; four LP heaters; and one deaerator with storage tank.

The condensate pump discharge lines are each equipped with a check valve and a gate valve. A common minimum flow recirculation line discharging to the condenser is provided downstream of the gland steam condenser to maintain minimum flow requirements for the gland steam condenser and the condensate pumps.

LP feedwater heaters 1 through 4 are 100 percent capacity shell and U-tube heat exchangers. Each LP feedwater heater is provided with inlet/outlet isolation valves and a full capacity bypass. LP feedwater heater drains cascade down to the next lowest extraction pressure heater and finally discharge into the condenser. Pneumatic level control valves control normal drain levels in the heaters. High heater level dump lines discharging to the condenser are provided for each heater for turbine water induction protection.

The deaerator is a horizontal, spray tray type with internal direct contact stainless steel vent condenser and storage tank. The deaerator is placed at high elevation to assure sufficient Net Positive Suction Head (NPSH) for the feedwater pumps.

For Case 2a (capture ready plant) condensate pumps have been sized to meet increased condensate flowrate of the plant converted to oxygen firing operation. Condensate pumps will be equipped with variable frequency drives (VFD) to provide for their efficient operation at a lower flowrate in a capture ready configuration.

Upon conversion to oxygen firing (Cases 1b and 2b), the LP feedwater heaters will not be operating, and LP feedwater heating will be performed by recovering heat produced by the Air Separation Unit (ASU) and Gas Processing System (GPS). Hence, LP feedwater heaters for case 2a have been sized based on a lower condensate flowrate.

Sizing criteria for condensate system components is presented in Table 6-10.

Table 6-10: Condensate System Sizing Criteria

System Component	Flowrate Basis, lb/h			
	Case 1a	Case 1b	Case 2a	Case 2b
Condensate pumps	3,093,075	3,093,075	3,986,203	3,986,203
LP feedwater heaters	3,093,075	3,093,075	3,086,415	3,086,415
Condenser (LPT1 + LPT2 exhaust)	2,598,478	2,598,478	3,983,977	3,983,977
Deaerator	4,409,353	4,409,353	6,089,032	6,089,032
Condenser hot well inventory	5 min	5 min	6.5 min	5 min
Deaerator storage tank inventory	5 min	5 min	7 min	5 min

6.6.2 Feedwater System

The function of the feedwater system is to pump the feedwater from the deaerator storage tank through the HP feedwater heaters to the boiler economizer. Two identical feedwater trains (one per boiler) are provided. Each train is equipped with one 100 percent capacity turbine-driven

boiler feedwater pump, three High Pressure (HP) feedwater heaters and one 30 percent capacity motor-driven startup boiler feed pump. All feedwater system equipment is sized based on a total feedwater flowrate per one boiler. CFB #1 and CFB #2 feedwater trains are interconnected via normally closed crossover ties enabling each feedwater train to operate with either boiler. One (per plant) spare main feedwater pump and one (per plant) spare startup feedwater pump are provided, capable of serving either boiler feedwater train.

All pumps are provided with inlet and outlet isolation valves, and individual minimum flow recirculation lines discharging back to the deaerator storage tank. The recirculation flow is controlled by automatic recirculation valves, which are a combination check valve in the main line and in the bypass, bypass control valve, and flow sensing element. The suction of the boiler feed pump is equipped with startup strainers, which are utilized during initial startup and following major outages or system maintenance.

Each of the HP feedwater heaters is provided with inlet/outlet isolation valves and a full capacity bypass. Feedwater heater drains cascade down to the next lowest extraction pressure heater and finally discharge into the deaerator. Pneumatic level control valves control normal drain level in the heaters. High heater level dump lines discharging to the condenser are provided for each heater for turbine water induction protection. Dump line flow is controlled by pneumatic level control valves.

For Case 2a (capture ready plant) all components of the feedwater system have been sized to meet the increased feedwater flowrate of the plant converted to oxygen firing operation (Case 2b).

6.6.3 Main and Reheat Steam System

The function of the main steam system is to convey main steam from the boiler superheater outlet to the HP turbine stop valves. The function of the reheat system is to convey steam from the HP turbine exhaust to the boiler reheater and from the boiler reheater outlet to the IP turbine stop valves.

Main steam exits the boiler superheater through a motor-operated stop/check valve and a motor-operated gate valve, and is routed in a single line feeding the HP turbine. A branch line off the IP turbine exhaust feeds the boiler feedwater pump turbine during unit operation starting at approximately 60 percent load.

Cold reheat steam exits the HP turbine, flows through a motor-operated isolation gate valve and a flow control valve, and enters the boiler reheater. Hot reheat steam exits the boiler reheater through a motor-operated gate valve and is routed to the IP turbine.

6.6.4 Extraction Steam System

The function of the extraction steam system is to convey steam from the turbine extraction points to the feedwater heaters.

The turbine is protected from over speed on turbine trip and from flash steam reverse flow from the heaters through the extraction piping to the turbine. This protection is provided by positive closing, balanced disc non-return valves located in all extraction lines except the lines to the LP feedwater heaters in the condenser neck. The extraction non-return valves are located only in horizontal runs of piping and as close to the turbine as possible.

The turbine trip signal automatically trips the non-return valves through relay dumps. The remote manual control for each heater level control system is used to release the non-return valves to normal check valve service when required to restart the system.

6.7 Circulating Water System

The circulating water system provides cooling water to the condenser and the auxiliary cooling water system. Water quality assumed in this study (Table 2-1) is consistent with the water quality of a public water facility or groundwater and can be used as a makeup cooling water with minimal pretreatment. All filtration and treatment of the circulating water are conducted on site. A mechanical draft, fiberglass, multi-cell, counter-flow cooling tower is provided for the circulating water heat sink (GEA, 2007).

The auxiliary cooling water system is a closed-loop system. Plate and frame heat exchangers with circulating water as the cooling medium are provided. This system provides cooling water to the lube oil coolers, turbine generator, boiler feed pumps, etc. All pumps, vacuum breakers, air release valves, instruments, controls, etc. are included for a complete operable system.

Two 50 percent capacity circulating water pumps are provided for the base case (Case 1a) and capture ready case (Case 2a). For capture ready design (Case 2a) the circulating water system piping is sized based on the increased circulating water flowrate of the plant converted to oxygen firing operation (Case 2b). The cooling tower for Case 2a is sized based on the capture ready plant design heat duty with space provisions for future expansion. As a part of Oxyfuel conversion and to accommodate increased heat duty, a third circulating water pump will be added, the cooling tower basin area will be increased, and the cooling tower will be expanded by four additional cells.

6.8 Makeup Water Treatment System

The makeup water treatment system provides high quality demineralized water for makeup to the condensate system. The principal function of the system is to purify the supply water for delivery to the condensate receiver tank. The demineralized water storage tank is provided in the system to receive or supply water to the system to accommodate volume changes due to transient operating conditions. Filtered water from municipal or ground water sources will supply the cycle makeup water treatment system. The system makeup water treatment system is comprised of ion exchange (IX) softeners and demineralization trains. One train normally operates, with one train on standby. Each train consists of a reverse osmosis (RO) membrane assembly and an electrodeionization (EDI) membrane assembly. Associated chemical feed equipment and a clean-in-place (CIP) system are common to the trains.

Filtered water is directed to the softeners for removal of scale-forming calcium and magnesium that would otherwise concentrate in and plug the RO membranes. Additionally, chemicals are injected into the softened water prior to the RO system to further protect the RO membranes from scaling or degradation.

A replaceable cartridge filter at each train assembly provides the fine filtration necessary to prevent suspended solids from plugging the RO membranes.

An RO booster pump is provided for each RO train to increase the pressure of the water supply entering the RO membranes. The reject water from the operating RO trains is discharged to the cooling tower basin to make up for evaporation and blowdown losses. The water exiting the RO trains is passed through the operating EDI units for final demineralization. The concentrate and reject water from the EDI units is discharged to the cooling tower basin along with the RO reject. A portion of concentrate may be recycled back to the inlet of the RO trains pending final design considerations. The EDI product water is transferred to the demineralized water storage tank.

6.9 Ducting and Stack

One stack is provided with two fiberglass-reinforced plastic (FRP) liners (one per boiler). The stack is constructed of reinforced concrete, with an outside diameter at the base of 70 feet. The stack is 500 feet high for adequate particulate dispersion. The stack has two FRP liners, each 17 feet in diameter.

6.10 Wastewater Treatment System

The wastewater treatment and discharge system collects various wastewater streams from the power plant, treats those wastewater streams requiring pH adjustment or oil removal, and discharges the combined wastewater to the municipal sewer system. The combined wastewater discharge will be continuously monitored for flow, temperature, and pH. The combined discharge will be periodically sampled and analyzed as required by the municipal sewer authority.

Wastewater streams, which may at times be below a pH of 6 (acidic) or above a pH of 9 (alkaline), will be directed to a wastewater neutralization system. Such streams include coal dumper sump pump discharge, sulfuric acid storage tank dike and tank truck unloading areas rainfall, and reverse osmosis clean-in-place spent solutions. Sulfuric acid or caustic will be metered into the wastewater to automatically adjust the wastewater pH within the 6 to 9 range for discharge to the municipal sewer system.

Wastewater streams that potentially could contain oil and grease will be directed to an oil/water separator. Such streams include turbine building and boiler area floor drains, transformer dike rainfall, and oil storage tank dike and unloading area rainfall. Oil that floats to the top of the separator will be periodically pumped to a tank truck for offsite disposal. Treated water (separator underflow) will be discharged to the municipal sewer system.

Neutral, oil-free wastewater streams will be discharged to the municipal sewer system without pre-treatment. These streams generally will contain higher concentrations of dissolved solids and include boiler and cooling tower blowdown, softener and condensate polisher regeneration wastes, and water treatment building floor drains.

All wastewater streams will be directed to a wastewater monitoring manhole. Flow, temperature, and pH will be monitored. As required by the municipal sewer authority, wastewater samples will be periodically taken and analyzed.

6.11 Miscellaneous Systems

Miscellaneous systems consisting of startup natural gas, service air, instrument air, and service water are provided. A natural gas system is used for startup and for a small auxiliary boiler.

6.12 Buildings and Structures

The development of the plant site to incorporate the new structures required for this technology is based on the assumption of a flat site. Foundations are provided for the support structures, pumps, tanks, and other plant components. The following buildings are included in the design:

- Steam turbine building
- Boiler building
- Warehouse
- Continuous emissions monitoring building
- Makeup water building
- Machine shop building
- Waste treatment building
- Administration and service building
- Guard house
- Coal crusher building
- Circulating water pump house

6.13 Accessory Electric Plant

The accessory electric plant for all cases consists of switchgear and control equipment, generator equipment, station service equipment, conduit and cable trays, and wire and cable. It also includes the main power transformer, required foundations, and standby equipment.

The plant voltage distribution system assumed in this study is presented in Table 6-11.

Table 6-11: Plant Voltage Distribution

Motors below 1 hp	110/220 volt
Motors 250 hp and below	480 volt
Motors above 250 hp	4,160 volt
Motors above 5,000 hp	13,800 volt
Steam Turbine generators	24,000 volt
Grid Interconnection voltage	345 kV

6.14 Instrumentation and Control

An integrated plant-wide control and monitoring distributed control system (DCS) is provided for all cases. The DCS is a redundant microprocessor-based, functionally distributed system. The control room houses an array of multiple video monitor and keyboard units. The monitor/keyboard units are the primary interface between the generating process and operations personnel. The DCS incorporates plant monitoring and control functions for all the major plant equipment. The DCS is designed to provide 99.5 percent availability. The plant equipment and the DCS are designed for automatic response to load changes from minimum load to 100 percent. Startup and shutdown routines are implemented as supervised manual, with operator selection of modular automation routines available.

6.15 Balance of Plant Auxiliary Loads

A summary of auxiliary loads associated with the balance of plant equipment is presented in Table 6-12.

Table 6-12: Balance of Plant Auxiliary Loads

BOP AUXILIARY LOAD SUMMARY, kWe	Case 1a	Case 1b	Case 2a	Case 2b
Estimated Subtotal Miscellaneous BOP loads @ 480 V	2,009	2,009	2,008	2,683
4.16 kV Auxiliary Loads				
Coal handling	2,479	2,533	2,474	2,891
Limestone handling (Lime handling for Cases 1b and 2b)	843	231	842	300
Circulating Water Pump	6,400	6,795	6,400	9,600
Cooling Tower Fans	1,611	1,710	1,611	2,327
Condensate pump	1,010	1,010	1,010	1,300
Air Compressor	417	417	417	417
FW Pump (Steam turbine driven)	0	0	0	0
Ash Handling	636	809	633	1,050
Subtotal Electrically-Driven BOP Auxiliaries @ 4.16 kV	13,394	13,505	13,386	17,884
Auxiliary Step-down Transformer 24 kV/4160 V	77	77	77	103
Subtotal BOP Auxiliary Loads @ 24 kV	18,727	18,727	18,723	25,436
Estimated Main Step-Up Transformer 24 kV/345 V	1,877	1,877	1,878	1,896

6.16 General Arrangement

The site is designed to be accessible by automobile and railroads. The CFB plant components are arranged in several technological islands separated by access roads and with adequate space for construction, operations, and maintenance. Major technological islands include:

Coal Handling Island:	Coal receiving, storage and reclaim systems
Sorbent Handling:	Sorbent receiving, storage and reclaim
Power Island:	CFB boilers and steam turbine systems
Balance of Plant Island:	Cooling tower, water storage and treatment systems
Switch Yard:	High and medium voltage electrical equipment
Waste Water Treatment:	Waste treatment and coal pile runoff ponds, waste treatment building
Oxidant Island:	Air Separation unit and air compressors
Gas Processing Island:	CO_2 compression and conditioning systems

In the Capture Ready layout (Case 2a), space allowances are provided for the future conversion to oxygen firing and CO_2 capture and compression. Those space allowances include:

- Space allowance for ASU Island
- Space allowance for Gas Processing Island
- Space allowance for cooling tower extension
- Larger Boiler and Steam turbine buildings
- Larger Coal storage area

Estimated space requirement for the new air-fired CFB facility (Case 1a) is approximately 155 acres, excluding railroad loop and buffer zone. The capture ready (Case 2a) and converted oxygen-fired plants (Cases 1b and 2b) designs would require an estimated 168 acres each.

Site general arrangement drawings are presented in Section 10.1.3

7 COST ESTIMATES

The plant investment cost estimate summaries, including engineering, procurement, and construction (EPC basis), are shown in this section for the four (4) power plants included in this study. The EPC basis does not include owner's costs. Owner's costs are, however, included in the economic analysis (Section 8). Operating and Maintenance costs are also shown in this section. All costs are expressed in May 2007 dollars. The level of accuracy of the cost estimates for these conceptual level designs is expected to be about +/- 30 percent.

7.1 Investment Cost Basis:

The power plants in this study are assumed to be constructed on a common Greenfield site in the Gulf Coast region of southeastern Texas. The boundary limit for these plants includes the complete plant facility within the "fence line". It includes the coal receiving and water supply systems and terminates at the high-voltage side of the main power transformers.

The EPC costs for these cases include all required equipment, including the traditional Boiler Island equipment (including the draft system and gas clean-up system), and Balance of Plant equipment (steam turbine/generator, condensate and feedwater system, material handling, cooling, electrical, instrumentation and control, and miscellaneous). The cases with oxygen firing and CO_2 capture include the air separation unit (ASU) and gas processing system (GPS) but do not include the CO_2 pipeline and CO_2 injection well.

The cost estimates include equipment, materials, labor, indirect construction costs, and engineering. The labor cost to install the equipment and materials was estimated on the basis of labor man-hours. The labor costing approach was a multiple contract labor basis with the labor cost including direct and indirect labor cost plus fringe benefits and allocations for contractor expenses and markup.

The costs included in the Engineering, Construction Management (CM), Home Office (H.O.) & Fee category consists of professional services and "other costs". Professional services include the cost for engineering, construction management, and startup assistance. The engineering services include all preliminary and detailed engineering and design for the total plant scope. It includes specifying equipment for purchase, procurement, performing project scheduling and cost control services for the project; providing engineering and design liaison during the construction period; and providing startup support. Construction management (CM) services cost includes a field management staff capable of performing all field contract administration; field inspection and quality assurance; project construction control; safety and medical services as required; field and construction insurance administration, field office clerical and administrative support. The "other costs" category includes a cost allowance for freight costs, heavy haul, insurance, taxes, and indirect startup spares.

The investment cost estimates for these plants were calculated based on a combination of vendor-furnished quotes and cost estimating database values. The CFB Boiler costs were estimated based on calculated material weights for all components, conceptual equipment arrangement drawings, and equipment lists which were developed as a part of the conceptual design of the required equipment.

The following assumptions were made in developing the EPC cost estimates for each concept evaluated:

- Investment costs are expressed in May 2007 US dollars
- Construction labor rates are based on Gulf Coast non-union rates
- The plant is constructed on a Greenfield site in southeastern Texas
- All costs are based on mature level (n^{th} plant) commercial design
- Owners costs (including interest during construction, start-up fuel, land, land rights, plant licensing, permits, etc.) are not included in the investment costs but are included in the Cost of Electricity analysis
- Ash is to be shipped off site with provisions for short-term storage only
- Investment in new utility systems is outside the scope
- No special limitations for transportation of large equipment
- No protection against unusual airborne contaminants (dust, salt, etc.)
- No unusual wind storms
- No earthquakes
- No piling required
- Annual operating time is 7008 h/yr (80 percent capacity factor).
- The investment cost estimate was developed as a factored estimate based on a combination of vendor quotes and in-house data for the major equipment. Such an estimate can be expected to have an accuracy of +/-30 percent.
- No purchases of utilities or charges for shutdown time have been charged against the project.

Other exclusions from the EPC investment cost estimate are as follows:

- Fuels required for startup
- Relocation or removal of buildings, utilities, and highways
- Permits
- Land and land rights
- Soil investigation
- Environmental Permits
- Disposal of hazardous or toxic waste
- Disposal of existing materials
- Custom's and Import duties
- Sales/Use tax.
- Forward Escalation
- Capital spare parts
- Chemical loading facilities
- Financing cost
- Owners costs
- Guards during construction
- Site Medical and Ambulance service
- Cost & Fees of Authorities
- Overhead High voltage feed lines
- Cost to run a natural gas pipeline to the plant
- Excessive piling
- CO_2 pipeline and injection well

Overall plant investment costs and the associated specific plant investment costs ($/kW) can vary quite significantly for any given plant design depending on several factors. Some of the more important factors are listed below.

- Plant Location and Site Conditions
- Construction Labor Basis
- Coal Analysis
- Ambient Conditions

For the cases in this study, the design coal analysis, design ambient conditions, plant location and site conditions are described in Section 2.1 under Plant Design Basis. The construction labor basis used is Gulf Coast non-union.

7.2 Operating and Maintenance Costs Basis:

Operating and Maintenance (O&M) costs are calculated for each plant and are listed as either fixed or variable. The fixed costs are those costs that are incurred irrespective of the number of hours of plant operation, whereas the variable costs are directly proportional to the operating hours. The variable operating and maintenance (VOM) costs for the new equipment included such categories as chemicals, waste handling, maintenance material and labor, supplemental fuel usage, and contracted services. The fixed operating and maintenance (FOM) costs for the new equipment includes operating labor only.

The O&M costs for the power plant equipment were developed quantitatively by WorleyParsons and ALSTOM.

7.2.1 Operating Labor Cost Basis:

Operating labor cost was calculated based on the number of operator jobs (O.J.) required. Table 7-1 shows the operating labor requirements for these Greenfield power plants. There are four (4) equivalent shits per day. Hence, this particular plant employs sixty-five (65) full-time personnel.

Table 7-1: Operating Labor Requirements

Operating Labor Requirements (O.J.) per equivalent shift	1 unit/mod	Total Plant
Skilled Operator	2	2
Operator	11.3	11.3
Foreman	1	1
Lab Tech's	2	2
TOTAL Operator Jobs (O.J.'s)	16.3	16.3

The average labor rate used to determine the annual cost was 33.00 $/hr, with a labor burden of 30 percent. The labor administration and overhead cost was assessed at a rate of 25 percent of the O&M labor. Maintenance cost was evaluated as a percentage of the initial capital cost.

7.2.2 Consumable Costs Basis:

Consumable costs including fuel, limestone, lime, water, and chemicals were determined on the basis of individual flow rates as listed in the material and energy balances, individual unit costs (listed below), and the plant annual operating hours. Waste disposal cost was also based on flow rates from the material and energy balances, unit costs, and operating hours. By-product credits were not considered for these cases.

- Coal cost: 1.52 $/MM-Btu
- Limestone cost: 15.00 $/Ton
- Lime cost: 85.00 $/Ton
- Water cost: 1.03 $/1,000 gallons
- Water treatment chemicals cost: 0.16 $/lbm
- Ash Disposal cost: 15.45 $/Ton
- By-product credits were not considered for these cases

7.3 Total Plant Investment Costs:

The total plant investment cost summaries for the four (4) Greenfield plants are shown in Table 7-2 and these results are illustrated in Figure 7-1. The costs shown for the retrofit cases (Cases 1b and 2b) include both the original costs for the unmodified plant plus the additional costs to convert the plant to oxygen firing and CO_2 capture. The costs are broken down into fourteen (14) separate accounts. Further breakdowns of these costs are provided in an appendix (Section 10.3). These costs were developed consistent with the approach and basis identified in the design basis and investment cost basis. The investment cost estimates (EPC basis) are expressed in May 2007 dollars.

Table 7-2: Total Plant Investment Cost Summary (EPC basis)

Acct	Total Plant Cost Summary	Case 1a		Case 1b		Case 2a		Case 2b	
No.	Item/Description	$ x 1000	$/kW	$ x 1000	$/kW	$ x 1000	$/kW	$ x 1000	$/kW
1	COAL & SORBENT HANDLING	41,010	65	44,451	94	41,010	64	44,451	72
2	COAL & SORBENT PREP & FEED	16,807	26	16,807	35	16,807	26	16,807	27
3	FEEDWATER & MISC. BOP SYSTEMS	74,155	117	80,267	169	86,626	136	92,738	149
4	CFB BOILER & ACCESSORIES	350,175	551	353,236	743	356,036	560	372,825	601
4a	Air Separation Unit	n/a	n/a	226,005	476	n/a	n/a	278,730	449
5	FLUE GAS CLEANUP	53,068	83	109,068	230	53,068	83	109,068	176
5a	CO2 Processing System (Purif, Compr, Liquef)	n/a	n/a	130,916	276	n/a	n/a	148,004	239
6	COMBUSTION TURBINE/ACCESSORIES	n/a	n/a	n/a	n/a	n/a	n/a	n/a	n/a
7	HRSG, DUCTING & STACK	34,983	55	34,983	74	34,983	55	38,866	63
8	STEAM TURBINE GENERATOR / PIPING	107,981	170	108,273	228	119,104	187	151,895	245
9	COOLING WATER SYSTEM	28,767	45	30,540	64	30,732	48	38,422	62
10	ASH/SPENT SORBENT HANDLING SYS	18,723	29	18,723	39	18,723	29	22,033	36
11	ACCESSORY ELECTRIC PLANT	33,588	53	55,655	117	33,588	53	62,240	100
12	INSTRUMENTATION & CONTROL	24,399	38	29,423	62	24,399	38	29,423	47
13	IMPROVEMENTS TO SITE	12,785	20	15,268	32	12,785	20	15,268	25
14	BUILDINGS & STRUCTURES	61,691	97	64,939	137	69,221	109	72,469	117
	TOTAL COST	**858,132**	**1,350**	**1,318,554**	**2,775**	**897,081**	**1,410**	**1,493,238**	**2,406**

As shown in Table 7-2, the EPC specific investment cost of Case 1a (Base-Case CFB plant burning an Eastern medium volatile bituminous coal) is 1350 $/kW net. Comparatively, Booras and Holt (2006) report an EPC investment cost of 1395 $/kWe net for a 500-MW ultra supercritical (USC) pulverized coal (PC) plant burning the Illinois #6 high volatile bituminous coal. It must be emphasized here that:

- The two plants cited above are reference, air-fired, and non-CO_2 capture plants
- The two EPC investment costs, also known as total plant costs (TPC), reported above do

not include the owner's costs (e.g., Pre-production cots, working capital, land, license fees, interest during construction). Booras and Holt (2006) estimate that the total capital requirement (TCR) costs, i.e., EPC costs + owner's cost, are 16–19% higher than the EPC costs.

- TPC is strongly dependent on, among other things, the site on which the plant is built. For example, the basis of the 1350 $/kW value obtained in this study is U.S. Gulf-Coast, with non-union labor used for its construction. If this site were shifted to, say, Ohio Valley, using unionized labor for its construction, the cost could be ~ 25% higher or ~1690 $/kW.

Figure 7-1 shows six graphs, which provide cost breakdowns for the four cases. The upper left graph shows the total plant investment cost ($/kWe-net), which includes all the accounts shown in Table 7-2. The upper right graph shows the boiler island cost ($/kWe-net), which includes accounts 4, 4a, 5, 5a, and 7 shown in Table 7-2. The middle left graph shows the steam cycle system cost ($/kWe-net), which includes accounts 3, 8, and 9 shown in Table 7-2. The middle right graph shows the solids handling systems cost ($/kWe-net), which includes accounts 1, 2, and 10 shown in Table 7-2. The lower left graph shows the electrical equipment cost ($/kWe-net), which includes accounts 11 and 12 shown in Table 7-2. The lower right graph shows the miscellaneous costs ($/kWe-net), which include accounts 13 and 14 shown in Table 7-2.

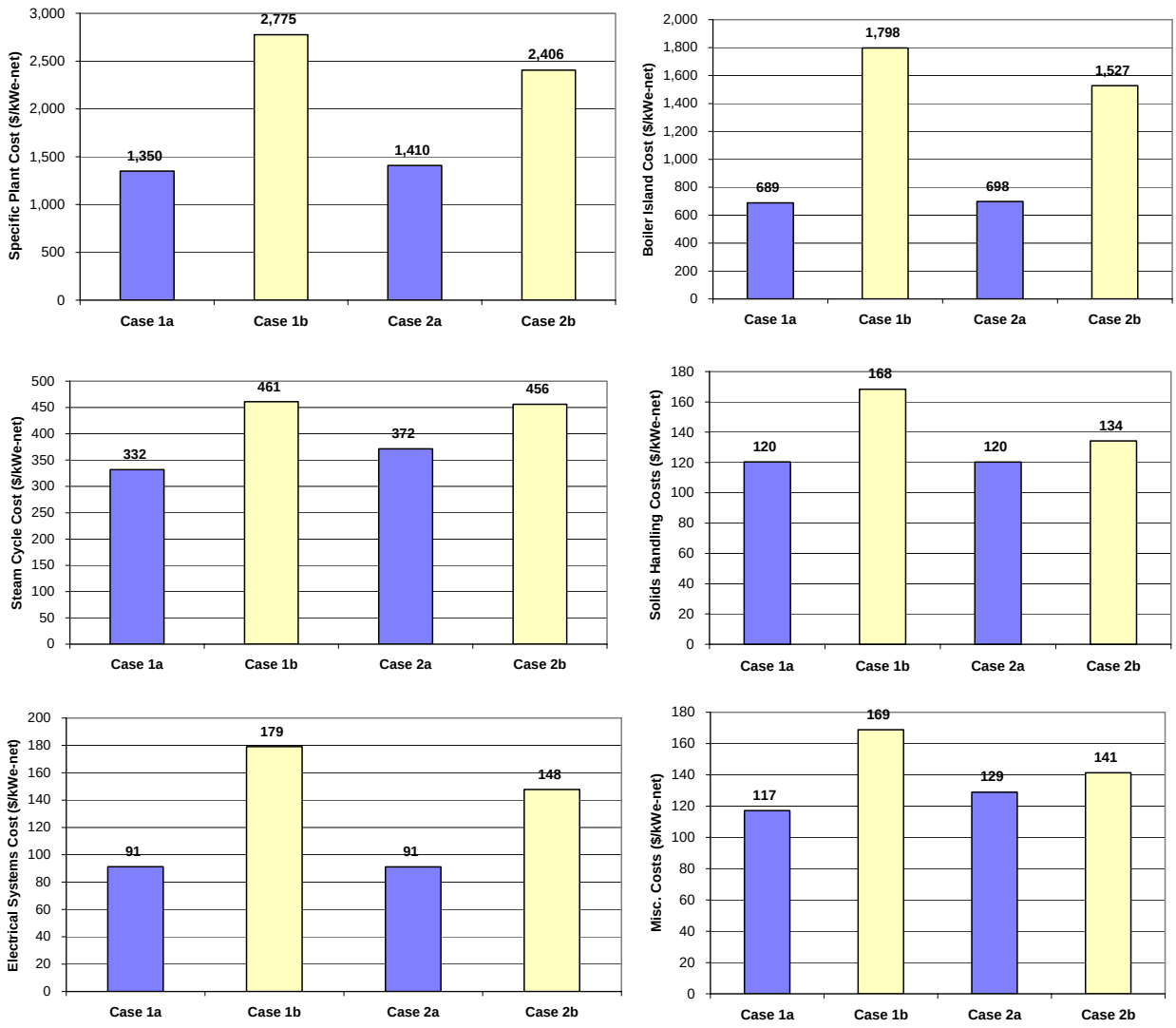

Figure 7-1: Power Plant Investment Costs (EPC Basis)

The upper left graph of Figure 7-1 shows the advantage of the capture ready design, which includes the impact of the additional steam generation used to maintain the net output. Comparison of the total power plant costs for Cases 1a and 2a shows that the capture ready design requires a relatively small pre-investment of about 4.5 percent. Some of this pre-investment cost is provided for the future conversion of the plant to oxygen firing and CO_2 capture. Additionally, part of the pre-investment for Case 2a is to also allow an increase in the gross electrical output from the plant of about 32 percent when the plant is retrofitted with oxygen firing and CO_2 capture. The increase in gross output is provided to offset the additional auxiliary power consumption of the ASU and GPS systems. In this manner, the plant net electrical output is maintained after the conversion is completed. Comparison of Cases 1b and 2b shows the effectiveness of the Case 2b capture ready design (after conversion to oxygen firing and CO_2 capture) as compared to the Case 1b capture un-ready design. The specific plant cost ($/kWe) is reduced by about 14 percent for Case 2b as compared to Case 1b.

The **non capture-ready plant retrofit cost** (EPC basis – May 2007 $US) is estimated to be about 969 $/kW-new, based on the new power output (i.e. the total retrofit cost divided by the new net output). There is also an additional specific cost ($/kW-new) impact associated with the value of the existing plant equipment. Because the retrofitted plant produces less net output, the specific cost ($/kW-new) of the existing plant equipment is increased. If this cost for the existing plant equipment is included, the total non capture-ready plant retrofit cost is estimated to be about 1,425 $/kW-new.

Modifications to the existing boiler are relatively minor as mentioned above and cost only about 6 $/kW-new. The new Flash Dryer Absorber SO_2 removal system costs 118 $/kW-new. The remaining costs - nearly 78% of the total retrofit cost - are for the cryogenic air separation and gas processing systems. Though costly, these systems are commercially proven and technically straightforward.

The **capture-ready plant retrofit cost** is estimated to be about 961 $/kW-new, based on the new power output (i.e. the total retrofit cost divided by the new net output). In this case, there is no additional specific cost ($/kW-new) associated with the value of the existing plant equipment (as there was for the non capture ready retrofit) because the plant still produces the same net output as it did before the retrofit.

7.3.1 BOP Cost and Scope Differences Between the Cases

Table 7-3 is provided below to help define the cost and scope differences between the cases for the balance of plant (BOP) equipment.

Table 7-3: BOP Cost and Scope Differences Between the Cases

Acct	Item/Description	Case 1a	Case 2a	Differences Between Cases 1 and 2a		Case 2b	Differences Between Cases 2a and 2b	
				Δ (2a–1a)	Scope		Δ (2b–2a)	Scope
1	COAL & SORBENT HANDLING	$41,010	$41,010	$0		$44,451	$3,441	New lime handling system is added
2	COAL & SORBENT PREP & FEED	$16,807	$16,807	$0		$16,807	$0	
3	FEEDWATER & MISC. BOP SYSTEMS	$74,155	$86,626	$12,471	Condensate pumps, deaerator, HP FW heaters with associated piping systems have been sized to meet future higher flow rate of the plant converted to oxygen firing operation.	$92,738	$6,112	Accounts for additional service water, natural gas, waste water treatment, boiler plant auxiliaries and other miscellaneous equipment
4	FLUIDIZED BED BOILER							
4.1	Fluidized Bed Boiler, w/o Bag House & Accessories	$0	$0	$0		$0	$0	
4.2	Air Separation Unit	$0	$0	$0		$0	$0	
4.3	Open	$0	$0	$0		$0	$0	
4.4-4.9	Boiler BOP	$0	$0	$0		$0	$0	
	SUBTOTAL 4	$	$0	$0		$0	$0	
5	FLUE GAS CLEANUP	$3,068	$3,068	$0		$3,068	$0	
5B	CO2 REMOVAL & COMPRESSION	$0	$0	$0		$0	$0	CO_2 removal foundation included in Account 14.
6	COMBUSTION TURBINE/ACCESSORIES							
6.1	Combustion Turbine Generator	$0	$0	$		$0	$0	
6.2-6.9	Combustion Turbine Accessories	$0	$0	$0		$0	$0	
	SUBTOTAL 6	$0	$0	$0		$0	$0	

Acct	Item/Description	Case 1a	Case 2a	Differences Between Cases 1 and 2a		Case 2b	Differences Between Cases 2a and 2b	
				Δ (2a–1a)	Scope		Δ (2b–2a)	Scope
7	HRSG, DUCTING & STACK							
7.1	Heat Recovery Steam Generator	$0	$0	$0		$0	$0	
7.2-7.9	HRSG Accessories, Ductwork and Stack	$34,983	$34,983	$0		$38,866	$3,883	Oxygen and CO_2 ductwork, foundation for Alstom recirculation ductwork.
	SUBTOTAL 7	$34,983	$34,983	$0		$38,866	$3,883	
8	STEAM TURBINE GENERATOR							
8.1	Steam TG & Accessories	$0	$0	$0		$0	$0	
8.2-8.9	Turbine Plant Auxiliaries and Steam Piping	$48,181	$59,304	$11,123	Condenser system has been sized to meet future higher flow rate of the plant converted to Oxyfuel operation	$59,595	$292	Increase in capacity of miscellaneous auxiliary systems due to increase in STG generating capacity
	SUBTOTAL 8	$48,181	$59,304	$11,123		$59,595	$292	
9	COOLING WATER SYSTEM	$28,767	$30,732	$1,965	Piping has been sized to meet future higher flow rate of the plant converted to Oxyfuel operation	$38,422	$7,690	CW pump and has been added and four-cell cooling tower extension
10	ASH/SPENT SORBENT HANDLING SYS	$18,723	$18,723	$0		$22,033	$3,309	Bed ash and fly ash compressors have been added. Also includes piping, and instrumentation needed to connect additional compressors.
11	ACCESSORY ELECTRIC PLANT	$33,588	$33,588	$0		$62,240	$28,652	Additional equipment associated with ASU and GPS

Acct	Item/Description	Case 1a	Case 2a	Differences Between Cases 1 and 2a		Case 2b	Differences Between Cases 2a and 2b	
				Δ (2a–1a)	Scope		Δ (2b–2a)	Scope
12	INSTRUMENTATION & CONTROL	$24,399	$24,399	$0		$29,423	$5,024	Additional equipment associated with new systems being added upon oxygen conversion
13	IMPROVEMENTS TO SITE	$12,785	$12,785	$0		$15,268	$2,483	Additional clearing, grubbing, roads, sidewalks, lighting, and landscaping.
14	BUILDINGS & STRUCTURES	$61,691	$69,221	$7,530	Reflects increase in building and foundation sizes to house larger/more equipment	$72,469	$3,248	Additional buildings and foundations to house larger/more equipment, and operators. Also includes ASU, and GPS foundations.
	TOTAL COST	**$398,156**	**$431,245**	**$33,089**		**$495,379**	**$64,134**	

7.3.2 Incremental Specific Investment Cost ($/kWe-net) for Case 2b:

Additional comparisons can be made between Cases 1b and 2b to determine the incremental specific investment cost for the additional power generated for Case 2b as detailed below:

- 174,684 Incremental EPC costs ($ x 1,000) added to Case 2b as compared to Case 1b
- 145,341 Incremental electrical output (kWe-net) for Case 2b as compared to Case 1b
- **1,202** Incremental specific plant investment cost ($/kWe-net) for the added net plant electrical output (Note: The added output includes oxygen firing and CO_2 capture).

It should be emphasized that this value ($1,202/kWe-net) for incremental specific plant investment cost (for power that includes almost 94 percent CO_2 capture) is quite favorable as compared to any feasible replacement power option (especially with CO_2 capture) such as would need to be used for Case 1b. This is demonstrated as follows: The net electrical outputs for Cases 1a and 1b are 635,675 and 475,186 kW, respectively (Table 3-1). Hence, the make up power requirement for Case 1b is 160,429 kW. The total EPC investment cost of Case 1b is $1,318,554,000 (Table 7-2). If the make up power for this plant were provided via the same Case 1b plant (with 94% CO_2 capture), then the specific EPC investment cost would be equivalent to 2,775 $/kW 1,318,554,000/475,186), which is more than 130% higher than 1,202 $/kW.

7.4 Operating and Maintenance Costs

The operating and maintenance costs consist of plant operating labor, maintenance (material and labor), an allowance for administrative and support labor, consumables, and solid waste disposal. The operating and maintenance costs and expenses were developed on a first-year basis with a May 2007 plant in-service date. The costs were determined assuming an equivalent plant operating capacity factor of 80 percent.

The operating and maintenance (O&M) results for the four (4) Greenfield plants are summarized in Table 7-4.

Table 7-4: Operating and Maintenance Cost Summary

Case Number	Operating & Maintenance (O&M) Costs					Annual Generation (10^6 kWh)	Total O&M (Cents/kWh)
	Fixed		Variable @ 80% CF		Total ($/year)		
	($/year)	($/kW)	($/year)	($/kWh)			
Case 1a - Base Case	11,947,666	18.8	21,214,829	0.0048	33,162,495	4,455	0.744
Case 1b - Base Case Converted	14,236,229	30.0	30,566,239	0.0092	44,802,468	3,330	1.345
Case 2a - Capture Ready	12,142,411	19.1	21,323,444	0.0048	33,465,855	4,459	0.751
Case 2b - Capture Ready Converted	14,430,974	23.3	41,001,830	0.0094	55,432,804	4,349	1.275

The range of total O&M costs for these four plants are from 0.744 to 1.345 ¢/kWh. Adding oxygen firing and CO_2 capture to these plants adds about 0.5 – 0.6 ¢/kWh. A more detailed breakdown of the O&M costs for each case including O&M for the ASU and GPS systems is shown in the appendix (Section 10.3

8 ECONOMIC ANALYSIS

Using an in-house economic model, an analysis was developed comparing the Capture Ready and Capture Unready plant designs for various times of conversion to carbon capture. The model can be operated to calculate either a levelized COE or the net present value (NPV) given the electricity price. The model has been modified to allow modeling of deferred capital investments, such as the addition of a CO_2 capture system at some time after the plant went into initial operation.

Technical assumptions include parameters such as the EPC price of the plant, O&M costs, time horizon, and net plant heat rate. Financial assumptions include items such as the cost of capital (interest rate), terms of the loan, and the required return on investment.

The results are calculated as levelized cost of electricity (COE) and also as a relative net present value (NVP) for the differences between two cases.

Four designs were included:

Case 1a - Capture Unready plant prior to conversion to carbon capture

Case 1b - Capture Unready plant after conversion to carbon capture

Case 2a - Capture Ready plant prior to conversion to carbon capture

Case 2b - Capture Ready plant after conversion to carbon capture

The analysis considered the first 40 years of plant life with conversion to carbon capture occurring from 1 to 20 years after initial startup. Additionally, the cases of never converting to carbon capture were also analyzed.

The common economic assumptions for each case are given in **Error! Reference source not found.**. Case specific parameters for each case are given in Table 8-2.

Table 8-1: Common Economic Parameters

	Units	All Cases
Fuel Price		
Gas Price	$/MMBtu	7.42
Coal Price	$/MMBtu	1.52
SCHEDULES AND GENERATION		
Depreciation Term	yr	20
Capacity factor	-	80%
Availability factor	-	100%
Eq. operating hours at MCR	hrs/yr	7,008
EQUITY, DEBT AND TAXES		
Discount factor/Minimum required IRR	-	7.5%
ROE	-	8.5%
Share of Equity	-	44%
Share of Debt	-	56%
Loan Interest Rate During Construction	-	8.6%
Loan Interest Rate During Operation	-	6.6%
Loan Up-front Fee	-	0.0%
Loan Commitment Fee	per year	0.0%
Loan Tenor (years after construction)	years	20
Corporate Tax		20%

Table 8-2: Case Specific Economic Parameters

Case		1a	1b	2a	2b
	Units	Capture Unready	Capture Unready - Converted	Capture Ready	Capture Ready - Converted
CO2 TAX & SALES					
CO2 Production	Lb/kWh	1.82	2.44	1.82	2.43
CO2 Capture	%	0	93.7	0	93.7
CO2 Production	Ton/yr	4,049,920	4,066,928	4,046,360	5,279,936
CO2 Emission	Ton/yr	4,049,920	256,216	4,046,360	332,636
CO2 emission permit, initial	Ton/yr	4,049,920	4,049,920	4,046,360	4,046,360
CO2 emission permit, final	Ton/yr	255,145	255,145	404,636	404,636
SCHEDULES AND GENERATION					
Construction period	Months	48	36	48	36
In operation while in construction	Months	--	33	--	33
Net degraded output	MWe	635.675	475.186	636.215	620.527
Net plant heat rate, HHV	Btu/kWh	8,881	12,228	8,866	12,156
Total fuel heat input at MCR	MMBtu/hr	5,645.4	5,767.4	5,640.7	7,488.0
Gas HHV input	MMBtu/hr	0.0	43.2	0.0	55.1
Coal HHV input	MMBtu/hr	5,645.4	5,810.6	5,640.7	7,543.1
Net generation	MWh/yr	4,454,810	3,330,103	4,458,595	4,348,653
COSTS					
EPC Price	1000$	858,132	460,422	897,081	596,157
Owner's Cost	-	11.2%	10.0%	11.2%	10.0%
Owner's EPC Cost	1000$	96,111	46,042	100,473	59,616
Total Initial Project Cost	1000$	954,243	506,464	997,554	655,773
Fixed O&M costs	$/kW	18.795	29.960	19.085	23.255
Variable O&M costs	¢/kWh	0.476	0.918	0.478	0.943
Total O&M costs	¢/kWh	0.744	1.345	0.751	1.275

The cost of electricity goes up after conversion of either plant (1a or 2a) to CO_2 capture. This is expected due to additional capital cost, increased operating and maintenance cost, and decreased efficiency. To compare different cases, we have calculated the cost of electricity levelized over the first 40 years of plant operation.

Table 8-3 and Figure 8-1 show the levelized COE for the Capture Unready and Capture Ready cases.

Table 8-3: Economic Comparison of Capture Ready and Capture Unready Plants

Year of Conversion	Case 1b (Capture Unready Converted)	Case 2b (Capture Ready Converted)	Relative NPV (2b Vs. 1b)
	(Levelized COE, ¢/kWh)		($10^6$$)
1	7.08	6.51	252.6
5	6.25	5.89	172.0
10	5.51	5.33	99.1
15	5.01	4.94	48.3
20	4.66	4.67	12.9
Not Converted	4.04	4.14	-42.0

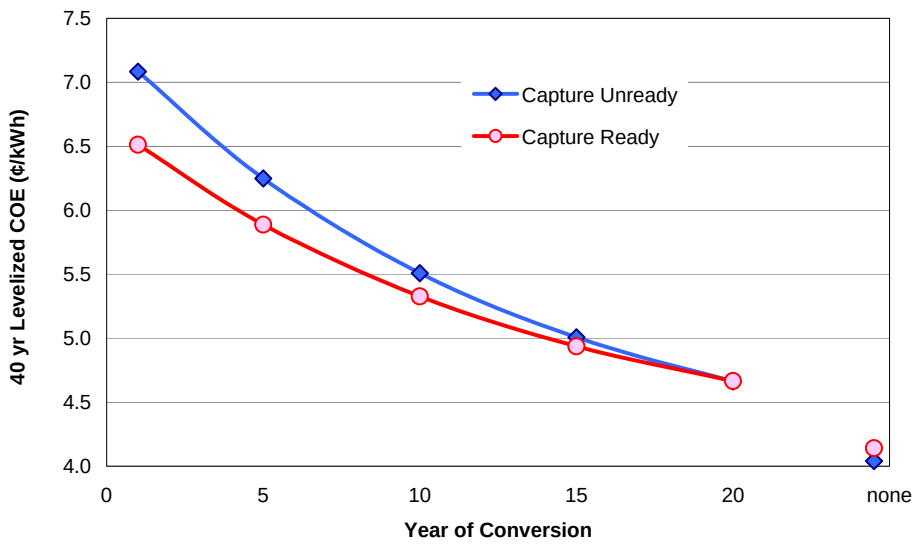

Figure 8-1: Levelized cost of Electricity Comparison

If the plants are never converted to CO_2 capture, the Capture Ready plant has a slightly higher COE. This is expected, as no benefit is ever received from the additional investment up front for the capture-ready capability, so the cost of electricity is higher.

The sooner the plant is converted to CO_2 capture, the more years (of the 40) are at a higher COE, so the levelized COE is higher. The sooner the plant is converted to CO_2 capture, the more years of benefit are received from the upfront capture-ready investment. This benefit in levelized COE decreases as the conversion is delayed; if the conversion does not occur until 20 years, there is no remaining benefit of the upfront capture-ready investment. This is because there are fewer years of benefit and because the value of the benefits is also reduced by the time value of money.

Looking at a relative net present value can also show the benefit of the upfront capture-ready investment. Assume that throughout its lifetime, the Capture Ready plant will sell electricity at the same dispatch COE as the Capture Unready plant. Before conversion, the Capture Ready plant will have a higher cost and therefore lower net revenue. After conversion, the situation is reversed.

Table 8-3 and Figure 8-2 show the Net Present Value of incremental cash flows over 40 years. (Each point on this curve represents the NPV of the Case 2b plants' entire life cycle cost relative to the Case 1b plant - only the year of CO_2 conversion varies for each point).

If the Capture Ready plant is never converted, the added capital pre-investment is never recovered over the 40-year plant life, resulting in a negative $42 million dollars in NPV relative to the Capture Unready plant. The sooner the plant is converted to CO_2 capture, the more years of benefit are received from the upfront capture-ready investment. This benefit in NPV decreases as the conversion is delayed; if the conversion does not occur until 20 years, there is little remaining benefit of the upfront capture-ready investment.

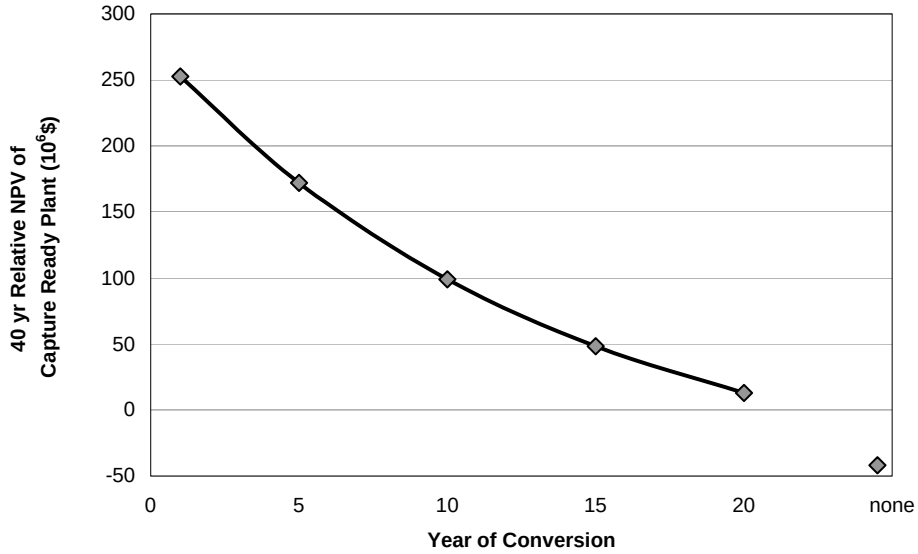

Figure 8-2: Relative Net Present Value Comparisons

Remarks

It was discussed earlier (Section 7.3) that a comparison of the total power plant costs for Cases 1a and 2a shows that the capture ready design requires a relatively small pre-investment of about 4.5 percent. This pre-investment cost is provided for the future conversion of the plant to oxygen firing and CO_2 capture, and to also allow an increase in the gross electrical output from the plant of about 32 percent when the plant is retrofitted with oxygen firing and CO_2 capture (i.e., from Case 2a to Case 2b) such that the net electrical output is not decreased.

Hence, the purpose of the analysis presented above was to determine whether or not this pre-investment cost is justified economically, by comparing the results from Case 2b with those from Case 1b (Capture unready converted to O_2 firing and CO_2 capture). Results summary:

- The levelized cost of electricity (LCOE) of the capture unready plant (1b) is always higher than that of the capture ready plant (2b), irrespective of the time of conversion to O_2 firing and CO_2 capture, up to 20 years.
- The differences between the LCOE's of these two plants get narrower with time of conversion, ultimately crossing at 20-year mark
- In the absence of conversion to O_2 firing and CO_2 capture, the LCOE of the capture ready plant (2a) is higher than that of capture unready (1a), due its additional pre-investment cost
- The relative net present value (NPV) between the Capture Ready and Capture Unready plants decreases with time of conversion to O_2 firing and CO_2 capture, consistent with the LCOE differences
- In the absence of conversion to O_2 firing and CO_2 capture, the NPV of the capture ready plant (2a) is -$42M relative to Capture Unready plant (1a), due its additional pre-investment cost
- Hence, the pre-investment cost is justified, provided that the plant conversion to O_2

firing and CO_2 capture is implemented within 20 years from initial operation. The earlier the conversion, the better based on both LCOE and NPV results

- The value of pre-investment cost disappears if the conversion to O_2 firing and CO_2 capture is implemented after 20 years from initial operation.

For Case 1b, the net power output was reduced by 25 % compared to Case 1a. Replacement power would be required to make up this shortfall. Several options are available for replacement power. One of the options is to use a supercritical CFB with oxygen firing and CO_2 capture (i.e., Case 1b). In this case, there would essentially be no impact on the economics shown above for Case 1b. Choosing another replacement power technology would impact the economics consistent with the selection.

9 BIBLIOGRAPHY

Anheden, M., and Morin, J. -X., "Oxy-CFB Process Analysis Report," Private Communication, March, 2004

Booras, G., and Holt, N., "IGCC and Co-production Economics Update,"CoalFleet General Technical Meeting, Bismarck, ND, August 9, 2006

Dillon, D. J., Panesar, R. S., Wall, R. A., Allam, R. J., White, V., Gibbins, J., "Oxy-Combustion Processes for CO_2 Capture from Power Plants", Report Number 2005/9, July 2005

Fox, C., Kinder Morgan CO_2 Company L.P.; IBC Carbon Sequestration Conference, Houston; 2002.

Himmelblau, David M., "Basic Principles and Calculations in Chemical Engineering", Prentice-Hall, Inc., Englewood Cliffs, NJ, 1974.

GEA Power Cooling Inc., Mechanical Draft Cooling Tower, Budgetary Information, Ref. No. 1490R1, May 18, 2007

Marion, J., Bozzuto, C., Nsakala, N., Liljedahl, G., "Evaluation Of Advanced Coal Combustion & Gasification Power Plants With Greenhouse Gas Emission Control," Topical Phase-I DOE-NETL Report, Prepared by ALSTOM Power Inc., May 15, 2003.

Nsakala, N., Liljedahl, G, Turek, D., "Greenhouse Gas Emission Control by Oxygen Firing in Circulating Fluidized Bed Boilers: Phase II – Pilot Scale Testing and Updated Performance and Economics for Oxygen Fired CFB with CO_2 Capture," Final DOE-NETL Report, Prepared by ALSTOM Power Inc., October 27, 2004.

10 APPENDICIES

Three appendices are included in this section as listed below:

1. Plant Drawings
   - CFB Boiler Drawings
   - Steam Turbine Drawings
   - Plant Layout Drawings
2. Plant Equipment Lists
3. Detailed Plant Costs

10.1 Appendix I - Drawings

10.1.1 CFB Boiler Drawings

This section shows drawings of the CFB boilers for three of the cases in this study as listed below:

- Case 1a - Air Fired CFB Boiler (Base Case)
- Case 2a - Air Fired Capture Ready CFB Boiler
- Case 2b - Capture Ready CFB Boiler (Case 2a) Retrofit with O_2 firing and CO_2 Capture

Note: Drawings for Case 1b (Base Case retrofit with O_2 firing and CO_2 capture) were not developed.

Case 1a (Base Case) Boiler Drawings

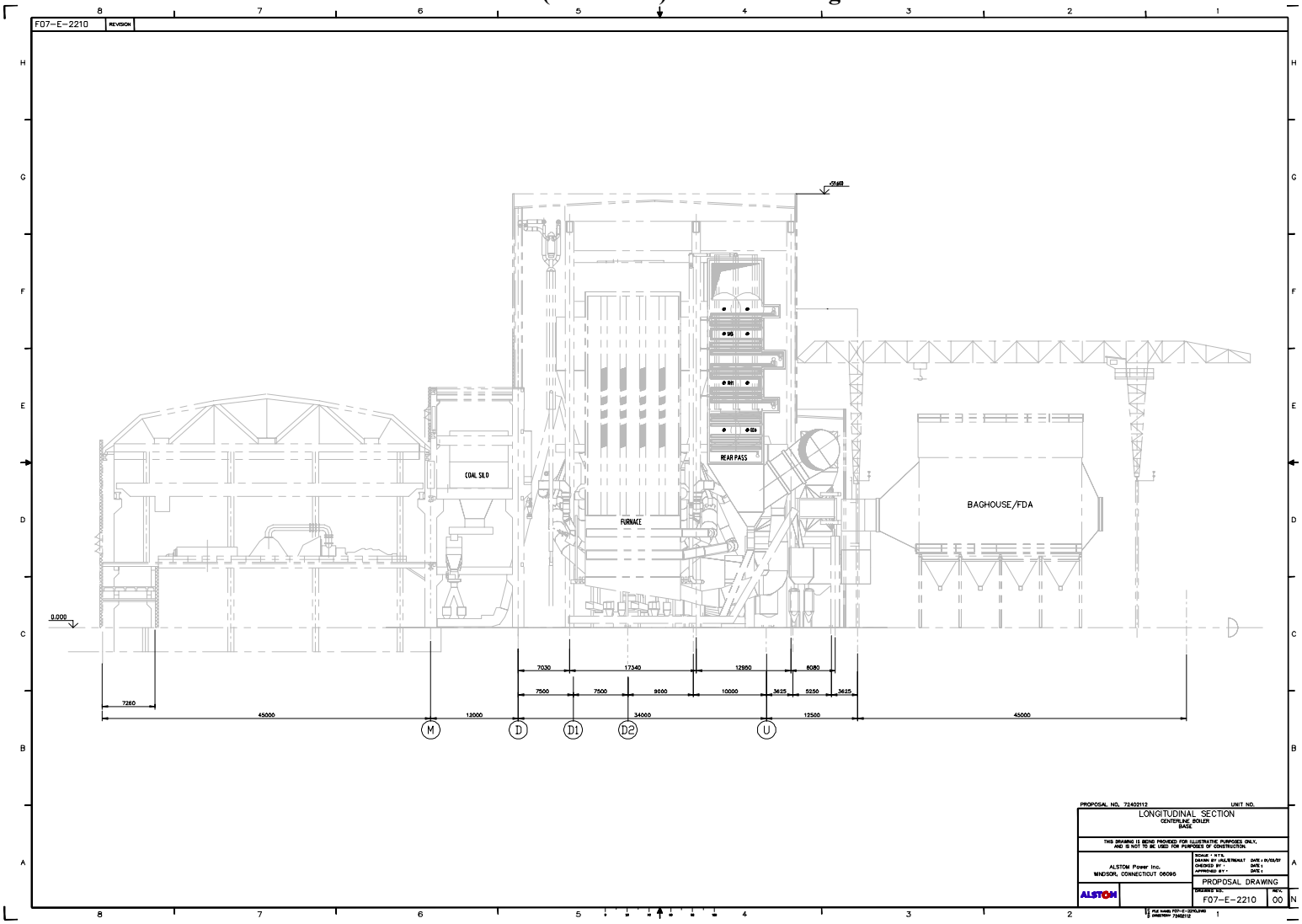

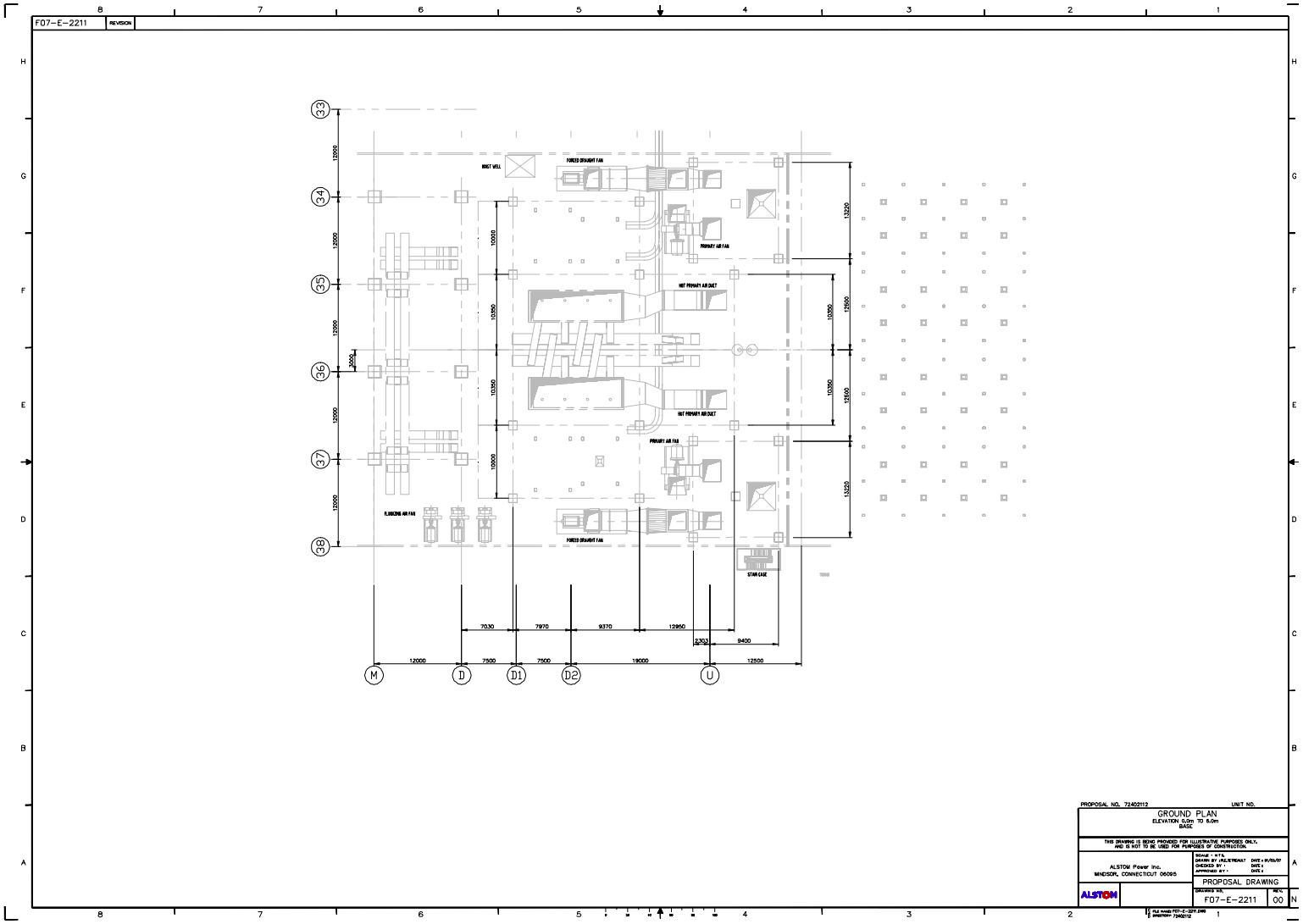
F07-E-2211
REVISION
HOST WELL
FORCED DRAUGHT FAN
PRIMARY AIR FAN
HOT PRIMARY AIR DUCT
FLUIDIZING AIR FAN
STAIR CASE
12000
10000
10350
12500
13220
7030
7970
9370
12950
2303
9400
7500
19000
12550
M
D
D1
D2
U
33
34
35
36
37
38
PROPOSAL NO. 72402112
UNIT NO.
GROUND PLAN
ELEVATION 0.00m TO 5.0m
BASE
THIS DRAWING IS BEING PROVIDED FOR ILLUSTRATIVE PURPOSES ONLY, AND IS NOT TO BE USED FOR PURPOSES OF CONSTRUCTION.
ALSTOM Power Inc.
WINDSOR, CONNECTICUT 06095
PROPOSAL DRAWING
DRAWING NO.
F07-E-2211
REV.
00
ALSTOM

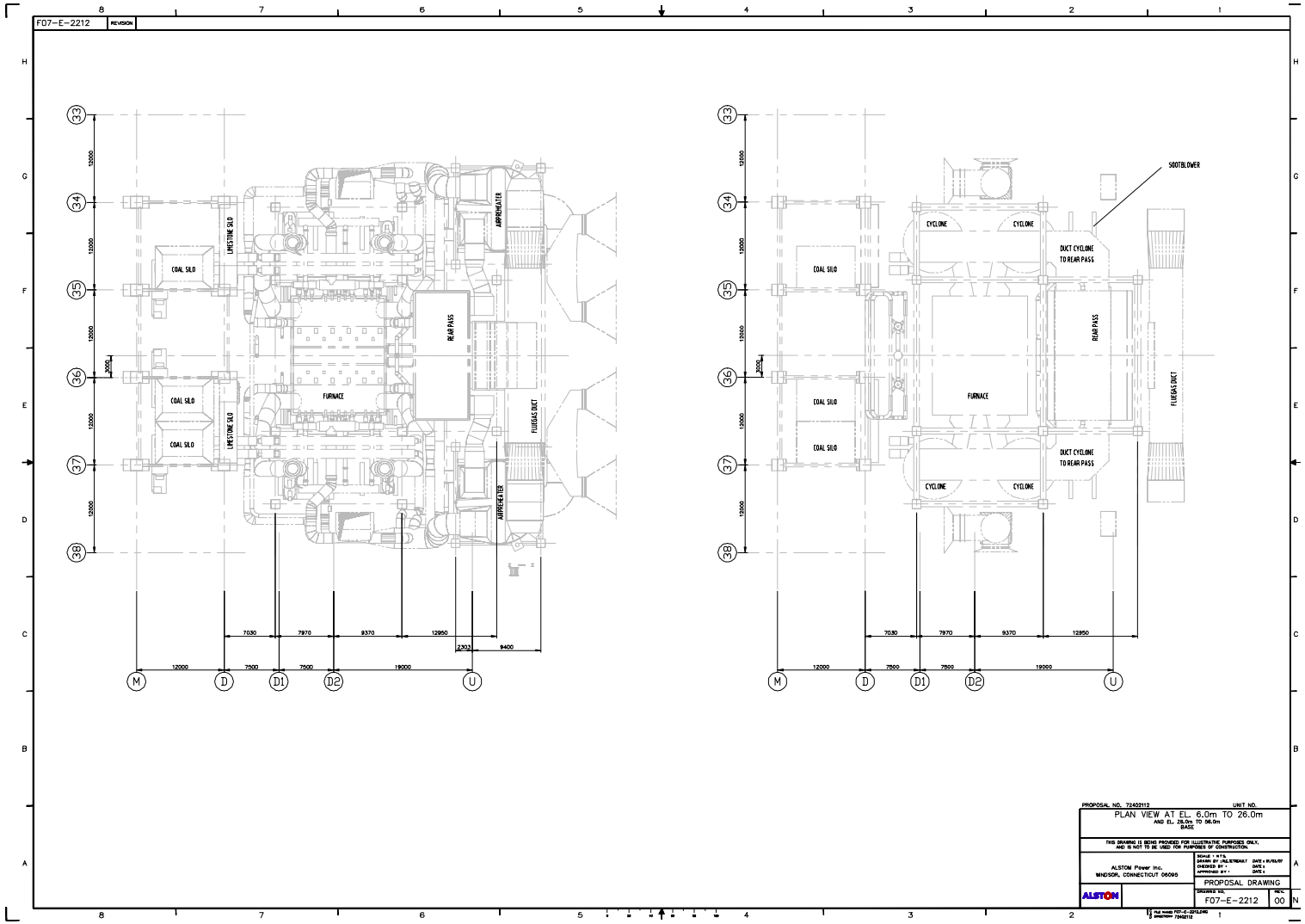
F07-E-2212
REVISION
COAL SILO
LIMESTONE SILO
FURNACE
REAR PASS
AIRPREHEATER
FLUEGAS DUCT
SOOTBLOWER
CYCLONE
DUCT CYCLONE TO REAR PASS
PLAN VIEW AT EL. 6.0m TO 26.0m
AND EL. 26.0m TO 56.0m
BASE
THIS DRAWING IS BEING PROVIDED FOR ILLUSTRATIVE PURPOSES ONLY, AND IS NOT TO BE USED FOR PURPOSES OF CONSTRUCTION.
ALSTOM Power Inc.
WINDSOR, CONNECTICUT 06095
PROPOSAL DRAWING
F07-E-2212
00

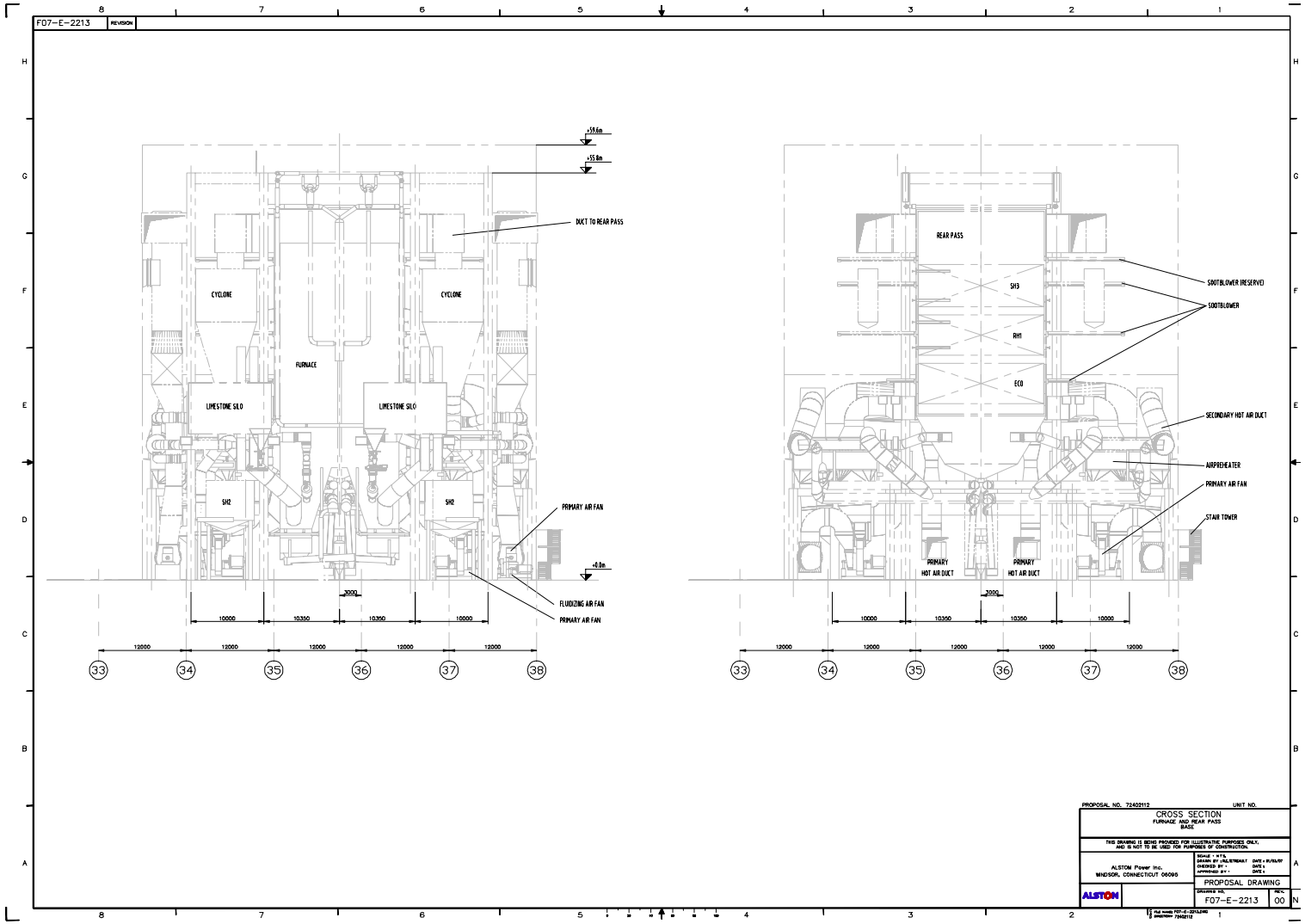
F07-E-2213
REVISION
+59.6m
+55.8m
DUCT TO REAR PASS
CYCLONE
CYCLONE
FURNACE
LIMESTONE SILO
LIMESTONE SILO
SH2
SH2
PRIMARY AIR FAN
+0.0m
FLUIDIZING AIR FAN
PRIMARY AIR FAN
REAR PASS
SH3
RH1
ECO
SOOTBLOWER (RESERVE)
SOOTBLOWER
SECONDARY HOT AIR DUCT
AIRPREHEATER
PRIMARY AIR FAN
STAIR TOWER
PRIMARY HOT AIR DUCT
PRIMARY HOT AIR DUCT
PROPOSAL NO. 72402112
UNIT NO.
CROSS SECTION
FURNACE AND REAR PASS BASE
THIS DRAWING IS BEING PROVIDED FOR ILLUSTRATIVE PURPOSES ONLY, AND IS NOT TO BE USED FOR PURPOSES OF CONSTRUCTION.
ALSTOM Power Inc.
WINDSOR, CONNECTICUT 06095
PROPOSAL DRAWING
F07-E-2213
00

Case 2a Capture Ready Boiler Drawings

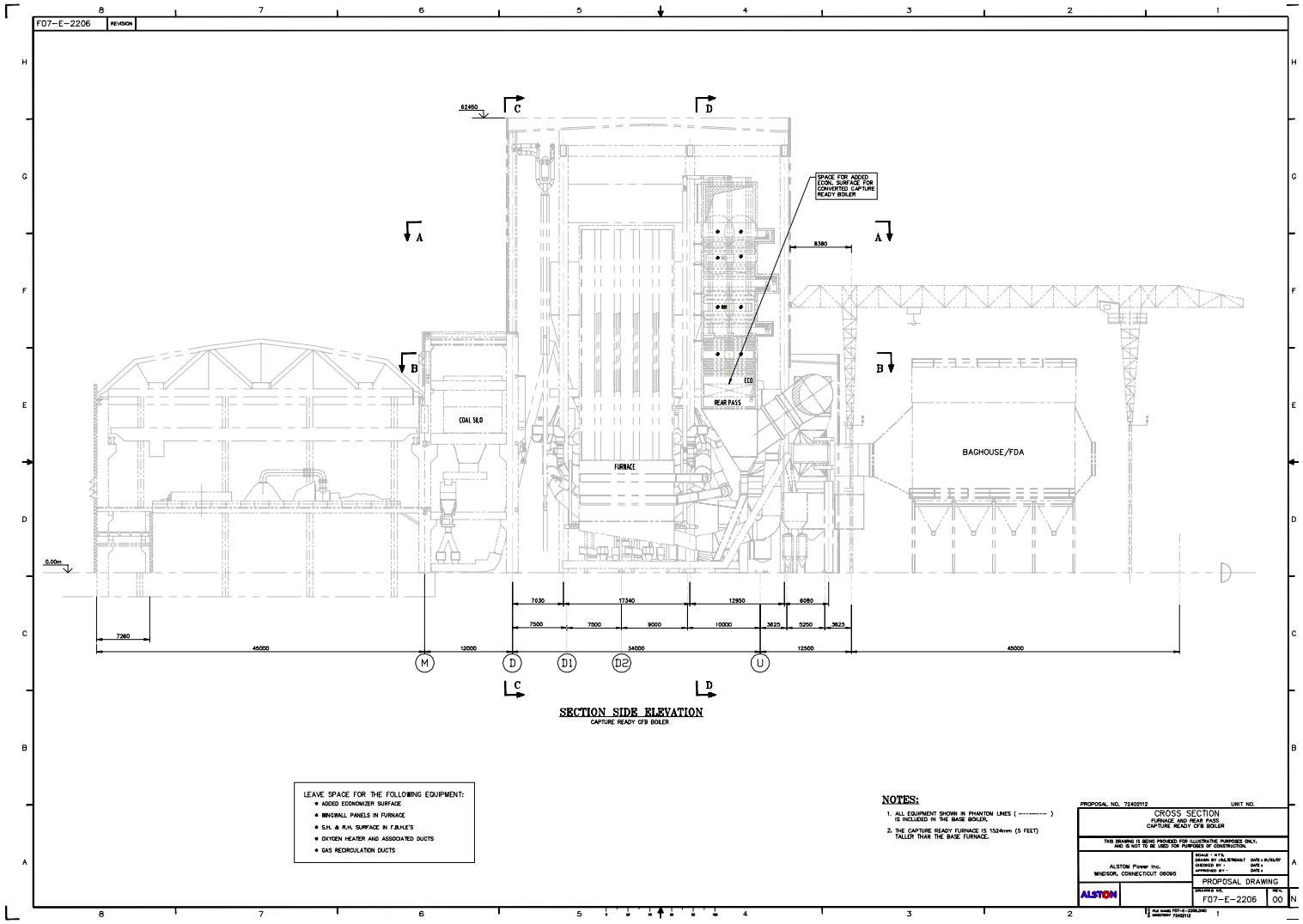

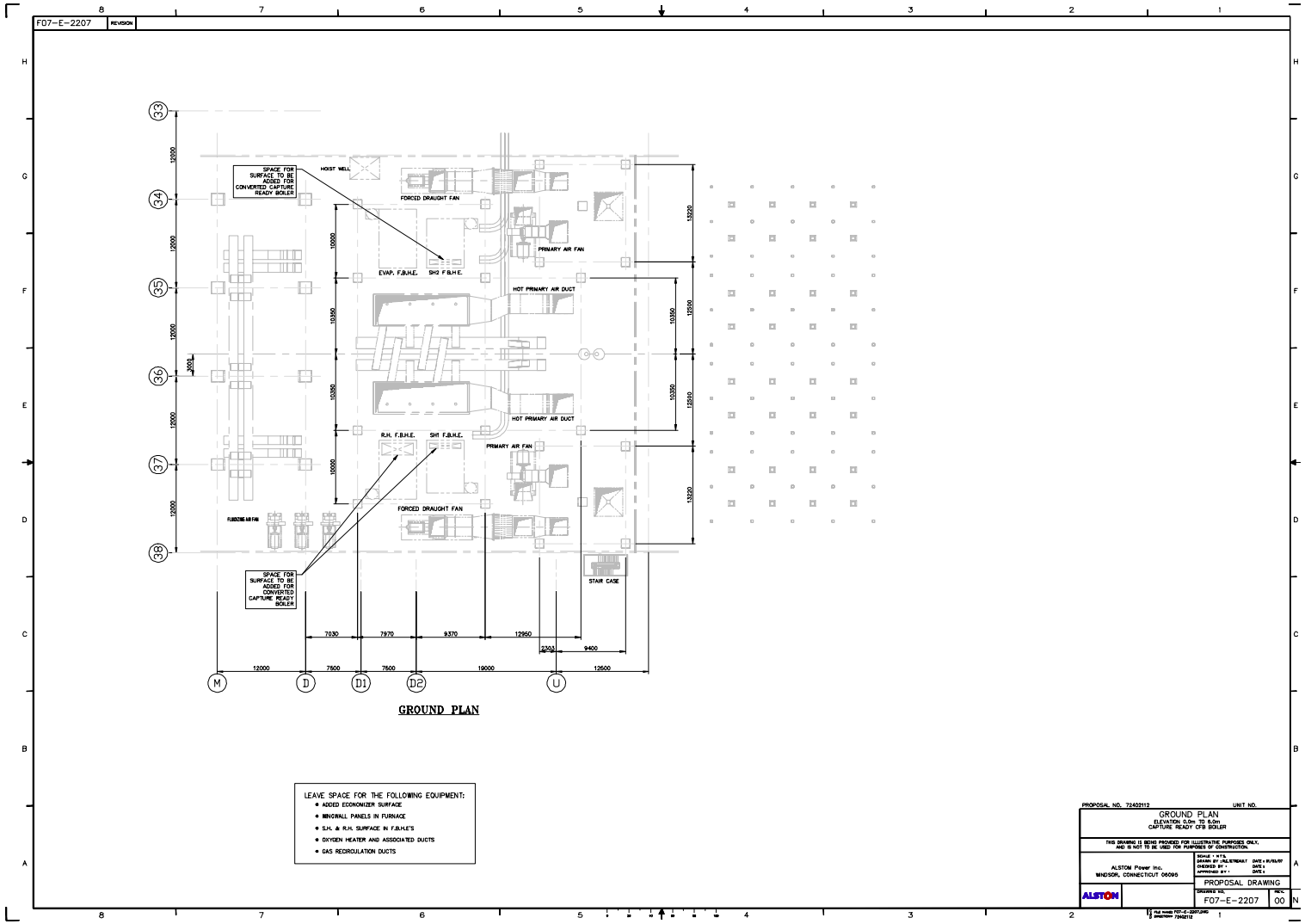
F07-E-2207
REVISION
SPACE FOR SURFACE TO BE ADDED FOR CONVERTED CAPTURE READY BOILER
HOIST WELL
FORCED DRAUGHT FAN
PRIMARY AIR FAN
EVAP. F.B.H.E.
SH2 F.B.H.E.
HOT PRIMARY AIR DUCT
R.H. F.B.H.E.
SH1 F.B.H.E.
FLUIDIZING AIR FAN
STAIR CASE
GROUND PLAN
LEAVE SPACE FOR THE FOLLOWING EQUIPMENT:
• ADDED ECONOMIZER SURFACE
• WINGWALL PANELS IN FURNACE
• S.H. & R.H. SURFACE IN F.B.H.E'S
• OXYGEN HEATER AND ASSOCIATED DUCTS
• GAS RECIRCULATION DUCTS
PROPOSAL NO. 72402112
UNIT NO.
GROUND PLAN
ELEVATION 0.0m TO 6.0m
CAPTURE READY CFB BOILER
THIS DRAWING IS BEING PROVIDED FOR ILLUSTRATIVE PURPOSES ONLY, AND IS NOT TO BE USED FOR PURPOSES OF CONSTRUCTION.
ALSTOM Power Inc.
WINDSOR, CONNECTICUT 06095
PROPOSAL DRAWING
F07-E-2207
00

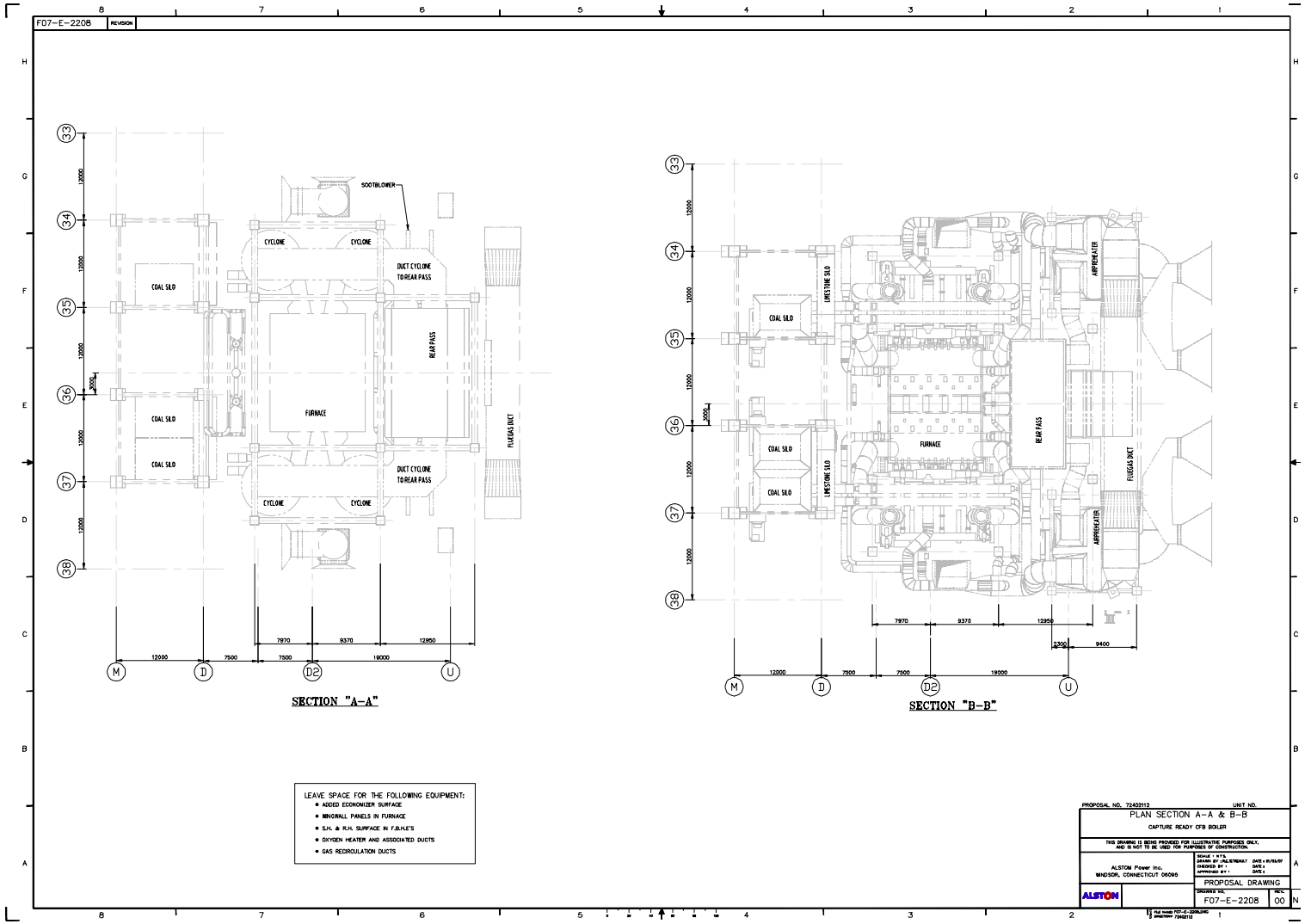
F07-E-2208B
REVISION
SOOTBLOWER
CYCLONE
CYCLONE
DUCT CYCLONE TO REAR PASS
COAL SILO
REAR PASS
FURNACE
FLUEGAS DUCT
COAL SILO
COAL SILO
DUCT CYCLONE TO REAR PASS
CYCLONE
CYCLONE
SECTION "A-A"
LIMESTONE SILO
AIRPREHEATER
COAL SILO
FURNACE
REAR PASS
FLUEGAS DUCT
COAL SILO
COAL SILO
LIMESTONE SILO
AIRPREHEATER
SECTION "B-B"
LEAVE SPACE FOR THE FOLLOWING EQUIPMENT:
• ADDED ECONOMIZER SURFACE
• WINGWALL PANELS IN FURNACE
• S.H. & R.H. SURFACE IN F.B.H.E'S
• OXYGEN HEATER AND ASSOCIATED DUCTS
• GAS RECIRCULATION DUCTS
PROPOSAL NO. 72402112
UNIT NO.
PLAN SECTION A-A & B-B
CAPTURE READY CFB BOILER
THIS DRAWING IS BEING PROVIDED FOR ILLUSTRATIVE PURPOSES ONLY, AND IS NOT TO BE USED FOR PURPOSES OF CONSTRUCTION.
ALSTOM Power Inc.
WINDSOR, CONNECTICUT 06095
PROPOSAL DRAWING
F07-E-2208
00

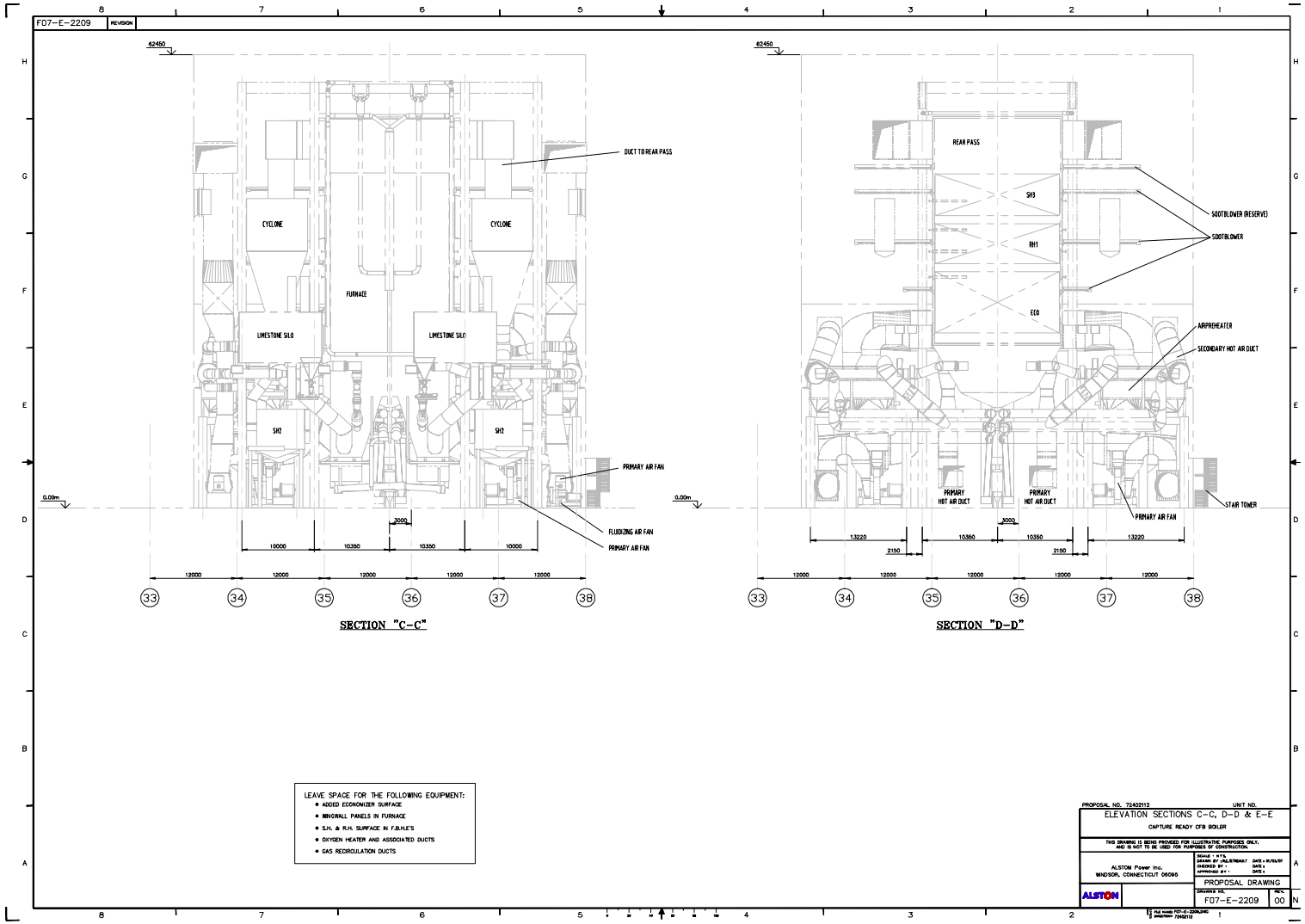
F07-E-2209
REVISION
62450
DUCT TO REAR PASS
CYCLONE
CYCLONE
FURNACE
LIMESTONE SILO
LIMESTONE SILO
SH2
SH2
PRIMARY AIR FAN
FLUIDIZING AIR FAN
PRIMARY AIR FAN
0.00m
3000
10000
10350
10350
10000
12000
12000
12000
12000
12000
33
34
35
36
37
38
SECTION "C-C"
62450
REAR PASS
SH3
RH1
ECO
SOOTBLOWER (RESERVE)
SOOTBLOWER
AIRPREHEATER
SECONDARY HOT AIR DUCT
PRIMARY HOT AIR DUCT
PRIMARY HOT AIR DUCT
PRIMARY AIR FAN
STAR TOWER
0.00m
3000
13220
2150
10350
10350
2150
13220
12000
12000
12000
12000
12000
33
34
35
36
37
38
SECTION "D-D"
LEAVE SPACE FOR THE FOLLOWING EQUIPMENT:
• ADDED ECONOMIZER SURFACE
• WINGWALL PANELS IN FURNACE
• S.H. & R.H. SURFACE IN F.B.H.E'S
• OXYGEN HEATER AND ASSOCIATED DUCTS
• GAS RECIRCULATION DUCTS
PROPOSAL NO. 72402112
UNIT NO.
ELEVATION SECTIONS C-C, D-D & E-E
CAPTURE READY CFB BOILER
THIS DRAWING IS BEING PROVIDED FOR ILLUSTRATIVE PURPOSES ONLY, AND IS NOT TO BE USED FOR PURPOSES OF CONSTRUCTION.
ALSTOM Power Inc.
WINDSOR, CONNECTICUT 06095
PROPOSAL DRAWING
ALSTOM
F07-E-2209
00

Case 2b Capture Ready Converted CFB Boiler Drawings

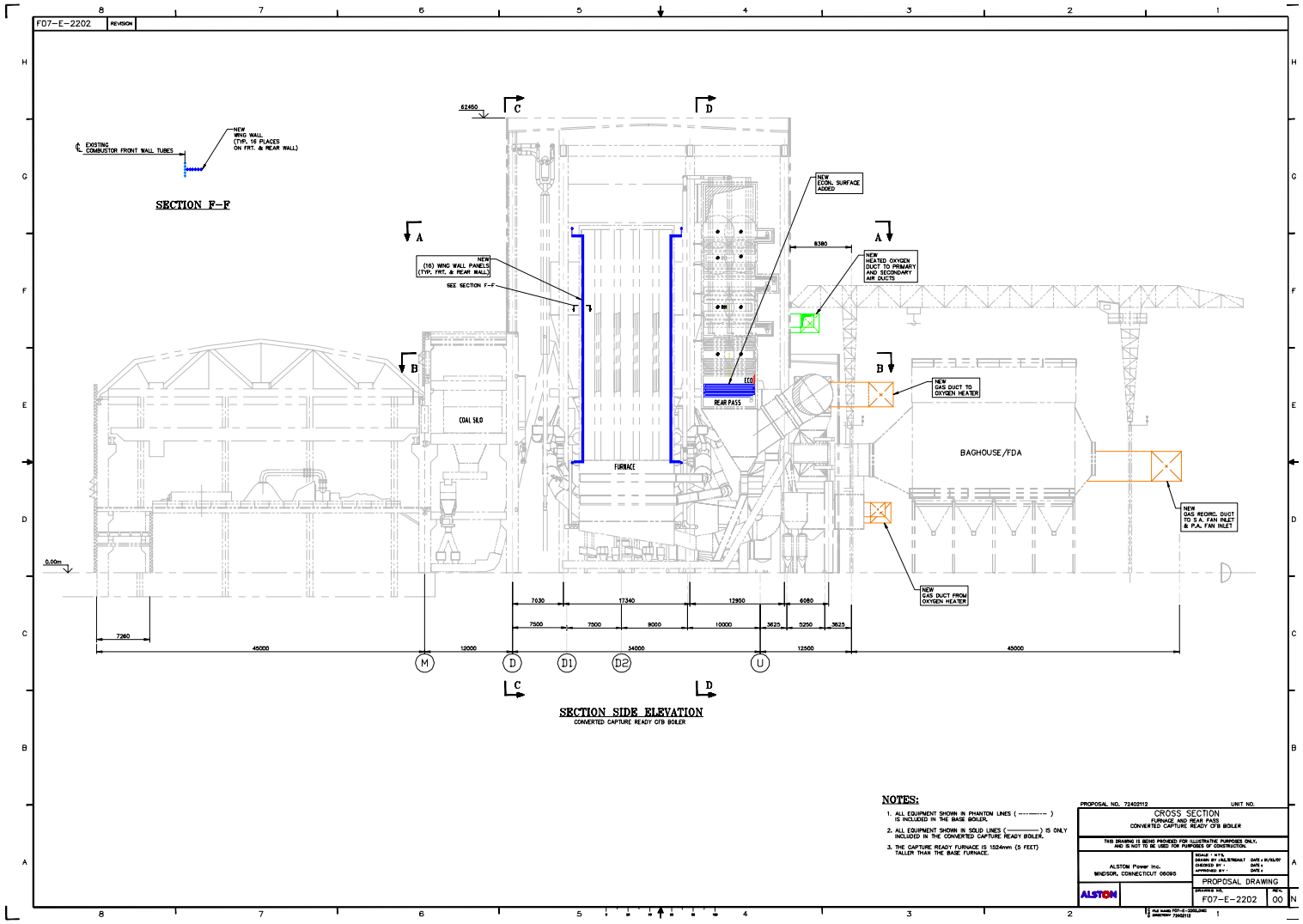

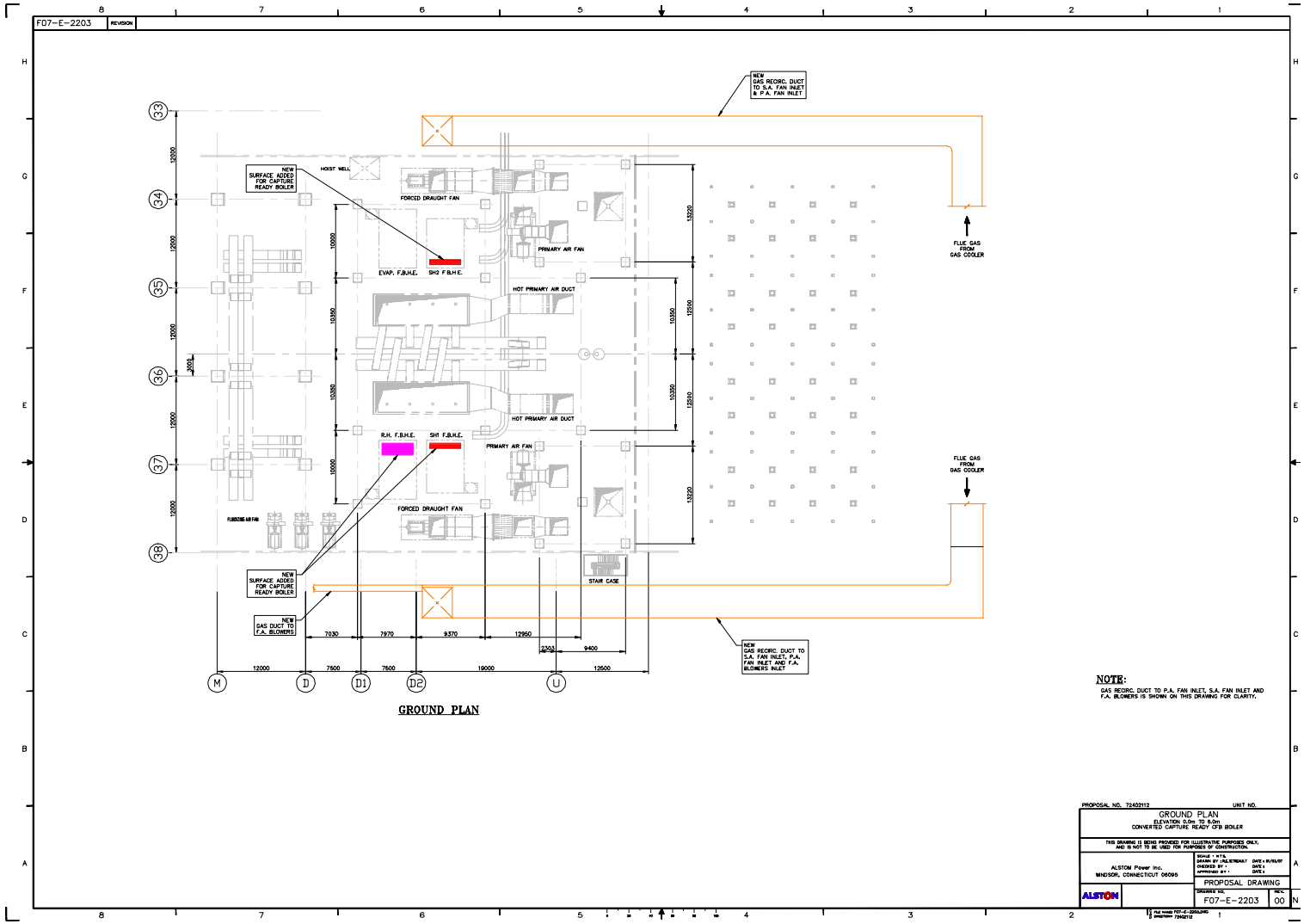
F07-E-2203
NEW GAS RECIRC. DUCT TO S.A. FAN INLET & P.A. FAN INLET
NEW SURFACE ADDED FOR CAPTURE READY BOILER
HOIST WELL
FORCED DRAUGHT FAN
PRIMARY AIR FAN
EVAP. F.B.H.E.
SH2 F.B.H.E.
HOT PRIMARY AIR DUCT
R.H. F.B.H.E.
SH1 F.B.H.E.
FLUE GAS FROM GAS COOLER
STAIR CASE
NEW GAS DUCT TO F.A. BLOWERS
NEW GAS RECIRC. DUCT TO S.A. FAN INLET, P.A. FAN INLET AND F.A. BLOWERS INLET
GROUND PLAN
NOTE:
GAS RECIRC. DUCT TO P.A. FAN INLET, S.A. FAN INLET AND F.A. BLOWERS IS SHOWN ON THIS DRAWING FOR CLARITY.
PROPOSAL NO. 72402112
UNIT NO.
GROUND PLAN
ELEVATION 0.0m TO 6.0m
CONVERTED CAPTURE READY CFB BOILER
THIS DRAWING IS BEING PROVIDED FOR ILLUSTRATIVE PURPOSES ONLY, AND IS NOT TO BE USED FOR PURPOSES OF CONSTRUCTION.
ALSTOM Power Inc.
WINDSOR, CONNECTICUT 06095
PROPOSAL DRAWING
ALSTOM
DRAWING NO.
F07-E-2203
REV.
00

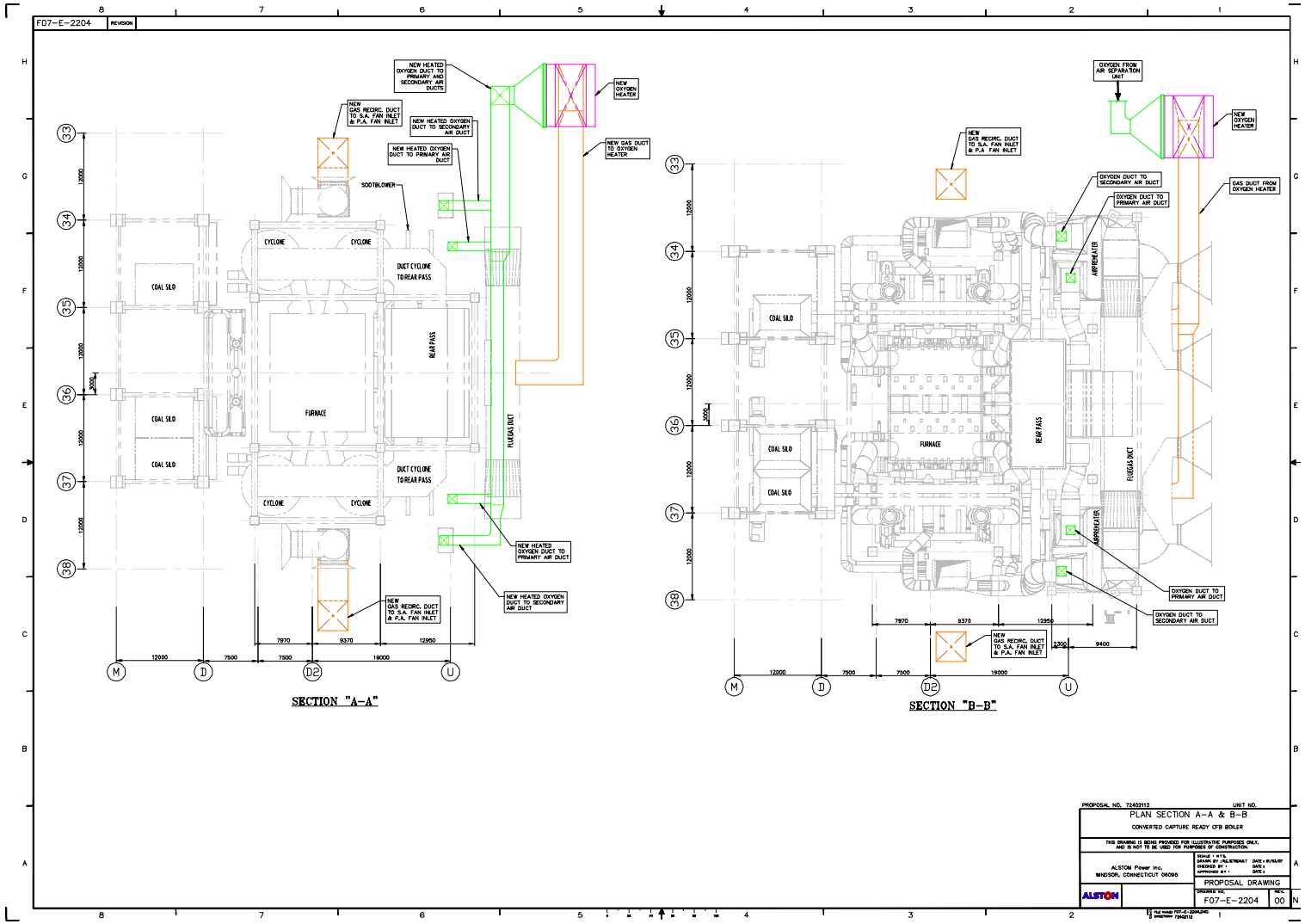
F07-E-2204
REVISION
NEW HEATED OXYGEN DUCT TO PRIMARY AND SECONDARY AIR DUCTS
NEW OXYGEN HEATER
NEW GAS RECIRC. DUCT TO S.A. FAN INLET & P.A. FAN INLET
NEW HEATED OXYGEN DUCT TO SECONDARY AIR DUCT
NEW HEATED OXYGEN DUCT TO PRIMARY AIR DUCT
NEW GAS DUCT TO OXYGEN HEATER
SOOTBLOWER
CYCLONE
DUCT CYCLONE TO REAR PASS
COAL SILO
REAR PASS
FURNACE
FLUEGAS DUCT
NEW HEATED OXYGEN DUCT TO PRIMARY AIR DUCT
NEW HEATED OXYGEN DUCT TO SECONDARY AIR DUCT
SECTION "A-A"
OXYGEN FROM AIR SEPARATION UNIT
OXYGEN DUCT TO SECONDARY AIR DUCT
OXYGEN DUCT TO PRIMARY AIR DUCT
GAS DUCT FROM OXYGEN HEATER
AIRPREHEATER
SECTION "B-B"
PROPOSAL NO. 72402112
UNIT NO.
PLAN SECTION A-A & B-B
CONVERTED CAPTURE READY CFB BOILER
THIS DRAWING IS BEING PROVIDED FOR ILLUSTRATIVE PURPOSES ONLY, AND IS NOT TO BE USED FOR PURPOSES OF CONSTRUCTION.
ALSTOM Power Inc.
WINDSOR, CONNECTICUT 06095
PROPOSAL DRAWING
ALSTOM
F07-E-2204
00

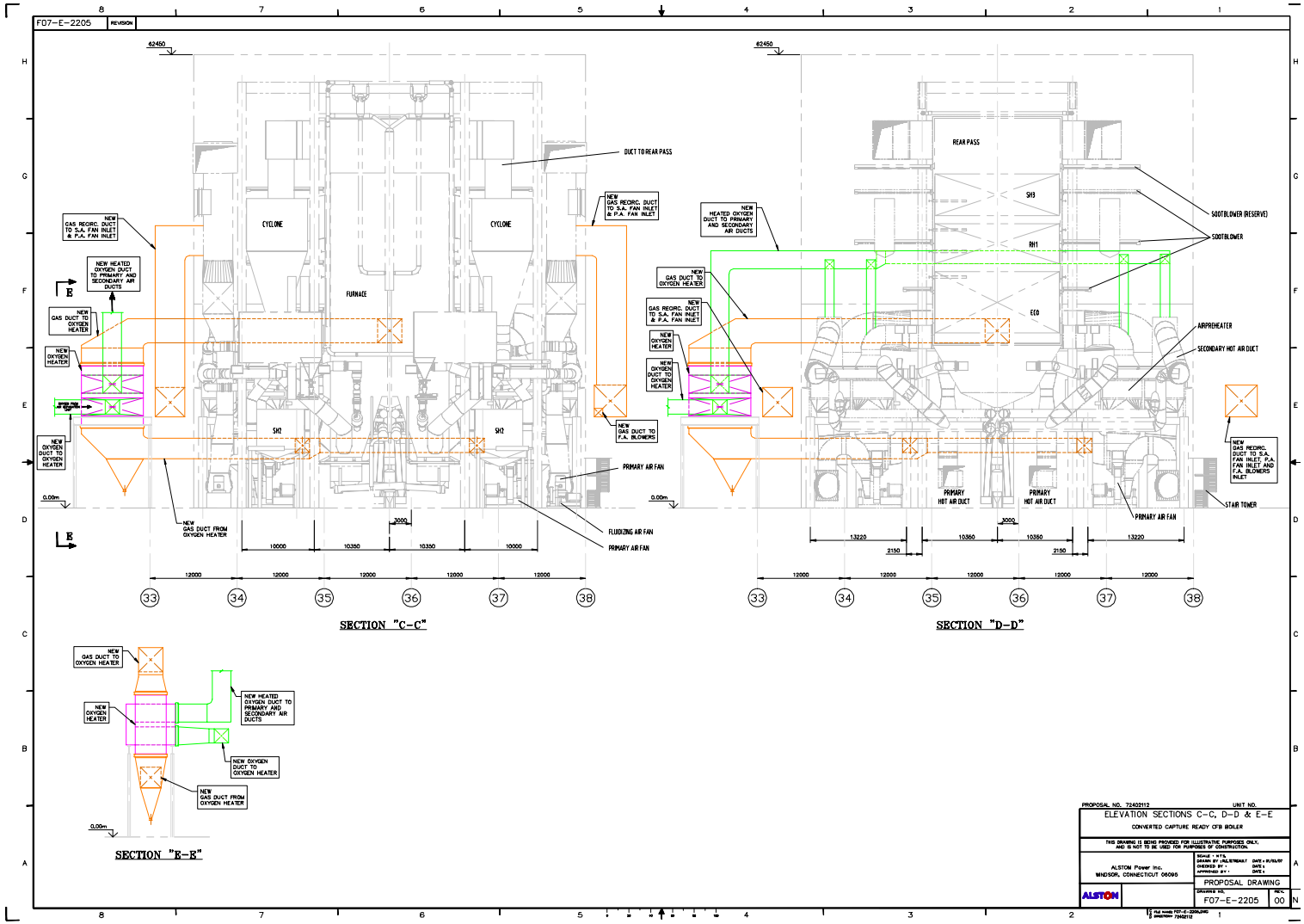
F07-E-2205
REVISION
62450
CYCLONE
CYCLONE
FURNACE
SH2
SH2
DUCT TO REAR PASS
NEW GAS RECIRC. DUCT TO S.A. FAN INLET & P.A. FAN INLET
NEW HEATED OXYGEN DUCT TO PRIMARY AND SECONDARY AIR DUCTS
NEW GAS DUCT TO OXYGEN HEATER
NEW OXYGEN HEATER
NEW OXYGEN DUCT TO OXYGEN HEATER
NEW GAS DUCT FROM OXYGEN HEATER
NEW GAS DUCT TO F.A. BLOWERS
PRIMARY AIR FAN
FLUIDIZING AIR FAN
0.00m
10000
10350
10350
10000
2000
12000
33
34
35
36
37
38
SECTION "C-C"
REAR PASS
SH3
RH1
ECO
SOOTBLOWER (RESERVE)
SOOTBLOWER
AIRPREHEATER
SECONDARY HOT AIR DUCT
PRIMARY HOT AIR DUCT
PRIMARY HOT AIR DUCT
PRIMARY AIR FAN
STAR TOWER
13220
10350
10350
13220
3000
2150
2150
SECTION "D-D"
SECTION "E-E"
PROPOSAL NO. 72402112
UNIT NO.
ELEVATION SECTIONS C-C, D-D & E-E
CONVERTED CAPTURE READY CFB BOILER
THIS DRAWING IS BEING PROVIDED FOR ILLUSTRATIVE PURPOSES ONLY, AND IS NOT TO BE USED FOR PURPOSES OF CONSTRUCTION.
ALSTOM Power Inc.
WINDSOR, CONNECTICUT 06095
PROPOSAL DRAWING
ALSTOM
DRAWING NO.
F07-E-2205
REV.
00

10.1.2 Steam Turbine Drawings

This section shows the layout plan drawings for the steam turbine/generators. The steam turbine external dimensions are identical for all Cases (1a, 1b, 2a, and 2b) as shown in Figure 10-1 and Figure 10-2. The generator external dimensions are identical for Cases (1a, 1b, and 2a) as shown in Figure 10-1 and Figure 10-2. The generator external dimensions are larger for Case 2b as shown in Figure 10-3

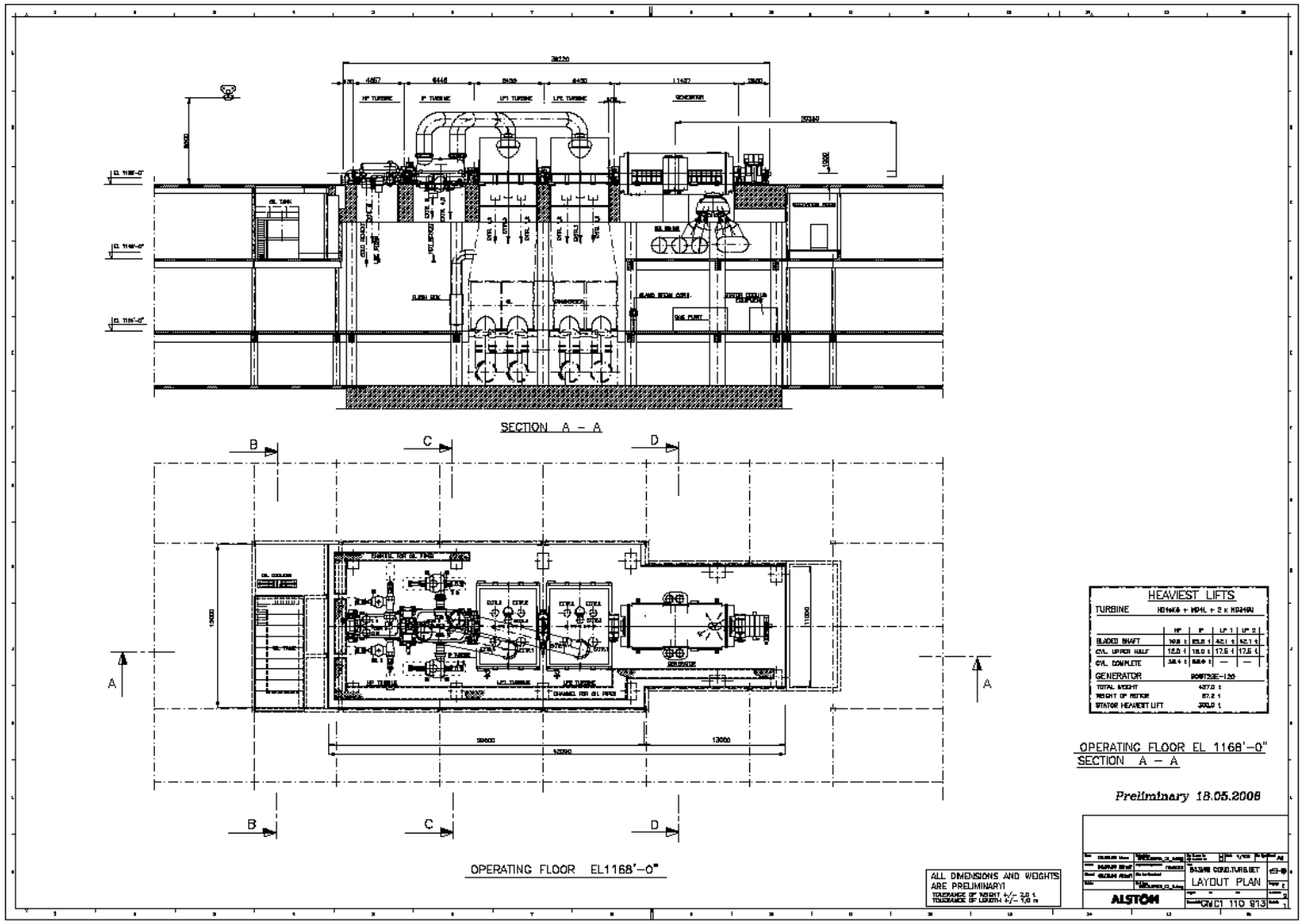

Figure 10-1: Cases 1a, 1b, 2a Steam Turbine/Generator Layout Plan Drawing (operating floor – el 1188')

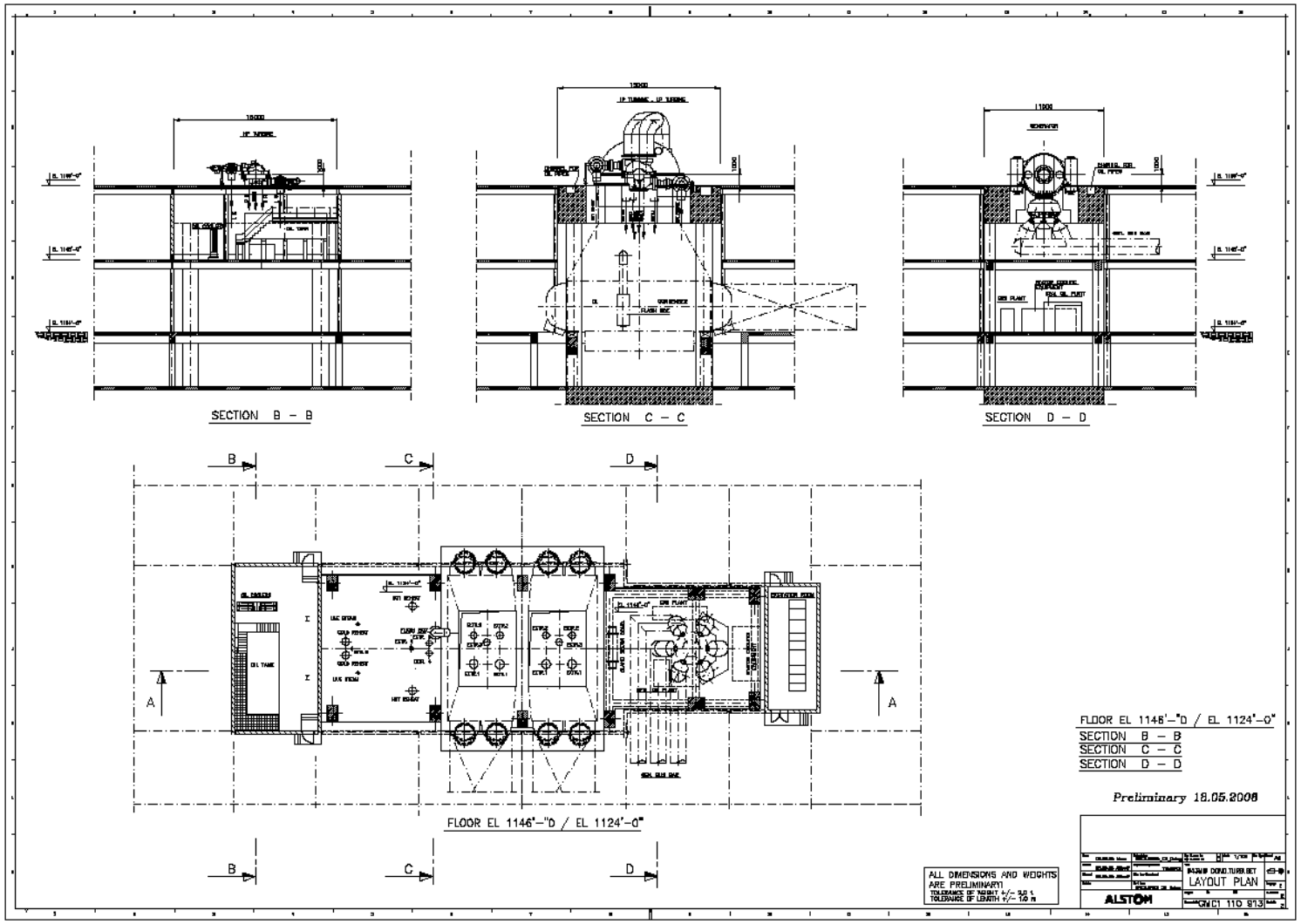

Figure 10-2: Cases 1a, 1b, 2a Steam Turbine/Generator Layout Plan Drawings (floor el. 1,146' / 1,124')

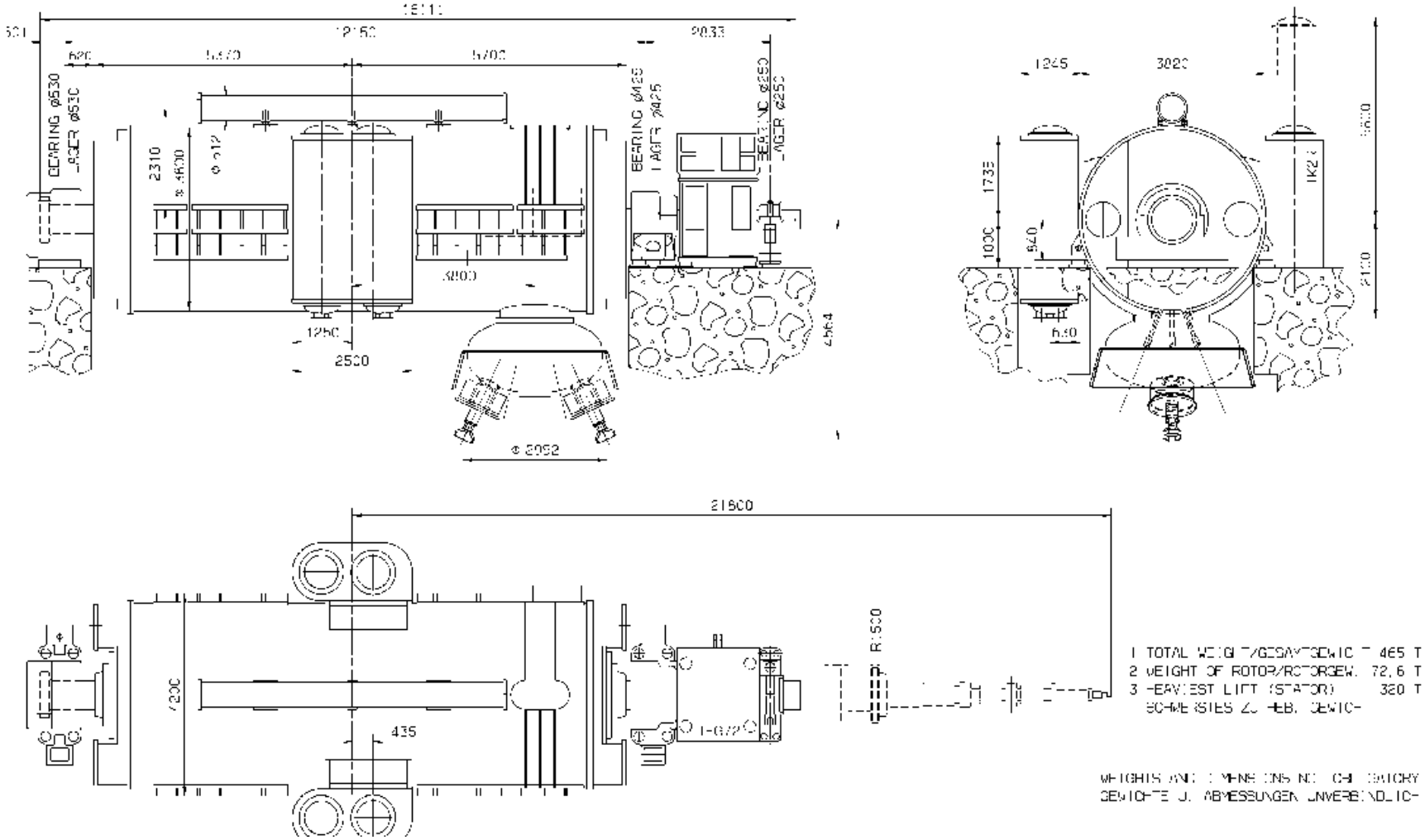

Figure 10-3: Case 2b Capture Ready Converted Generator General Arrangement Drawing

10.1.3 Plant Layout Drawings

This section shows drawings of the power plant layouts for three of the cases in this study as listed below:

- Case 1a - Air Fired CO_2 Capture Unready Power Plant - Base Case
- Case 1b - The Base Case Power Plant Retrofit with O_2 Firing and CO_2 Capture
- Case 2a - Air Fired CO_2 Capture-Ready Power Plant
- Case 2b - The Case 2a Capture-Ready Power Plant Retrofit with O_2 Firing and CO_2 Capture

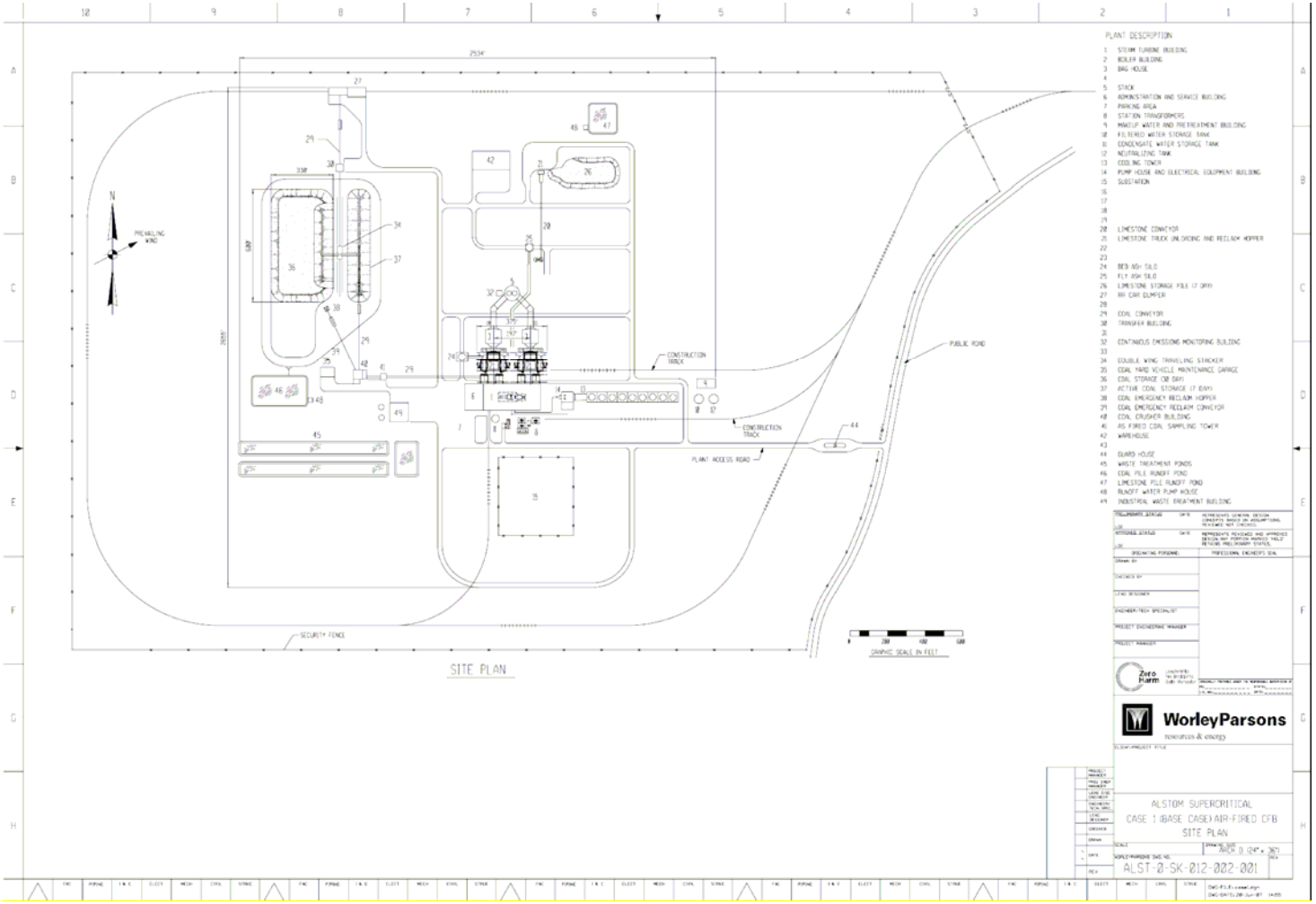

Figure 10-4: Case 1a (Base Case) Air Blown CFB Steam Plant (Not Capture Ready) Layout

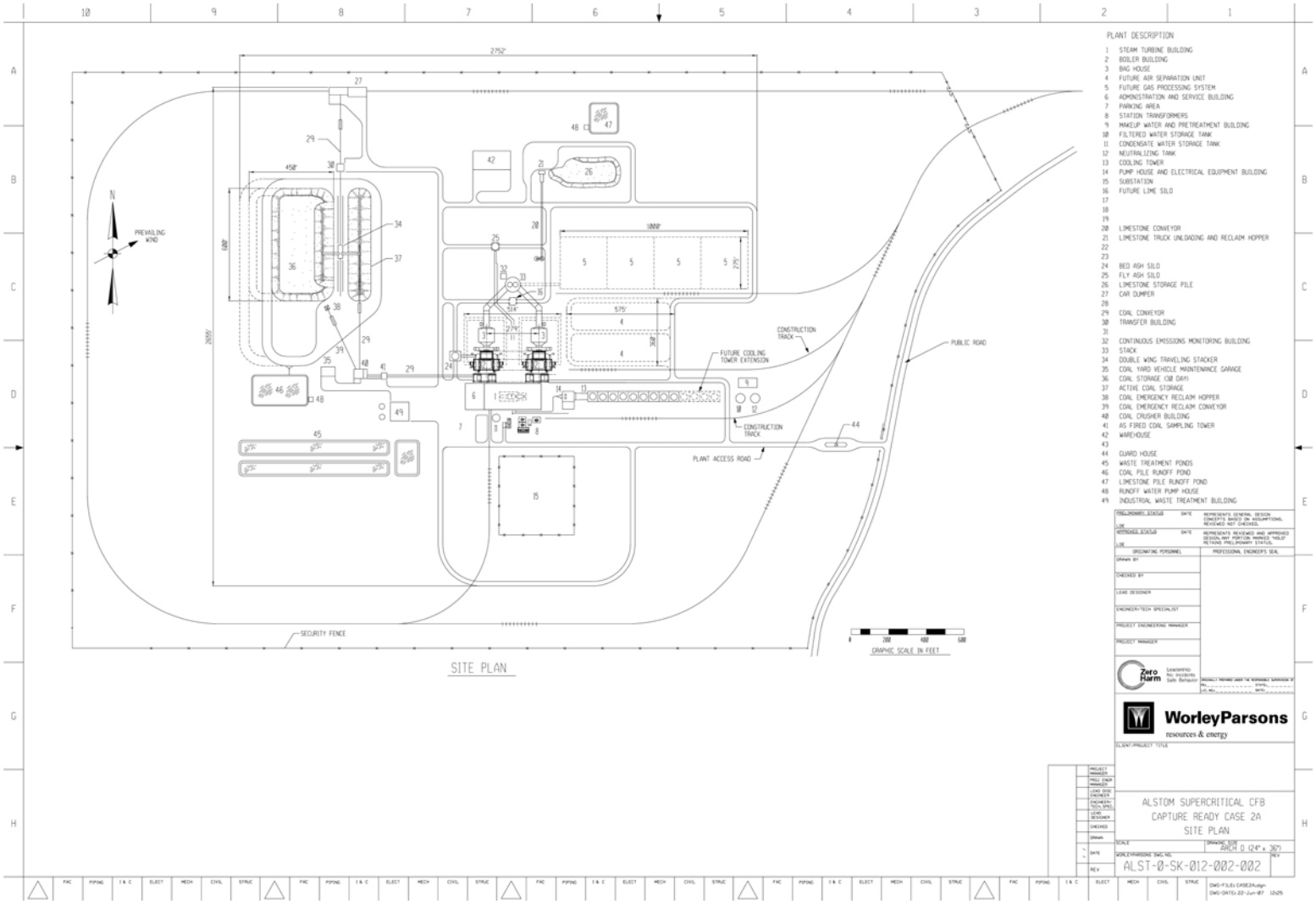
PLANT DESCRIPTION
1 STEAM TURBINE BUILDING
2 BOILER BUILDING
3 BAG HOUSE
4 FUTURE AIR SEPARATION UNIT
5 FUTURE GAS PROCESSING SYSTEM
6 ADMINISTRATION AND SERVICE BUILDING
7 PARKING AREA
8 STATION TRANSFORMERS
9 MAKEUP WATER AND PRETREATMENT BUILDING
10 FILTERED WATER STORAGE TANK
11 CONDENSATE WATER STORAGE TANK
12 NEUTRALIZING TANK
13 COOLING TOWER
14 PUMP HOUSE AND ELECTRICAL EQUIPMENT BUILDING
15 SUBSTATION
16 FUTURE LIME SILO
20 LIMESTONE CONVEYOR
21 LIMESTONE TRUCK UNLOADING AND RECLAIM HOPPER
24 BED ASH SILO
25 FLY ASH SILO
26 LIMESTONE STORAGE PILE
27 CAR DUMPER
29 COAL CONVEYOR
30 TRANSFER BUILDING
32 CONTINUOUS EMISSIONS MONITORING BUILDING
33 STACK
34 DOUBLE WING TRAVELING STACKER
35 COAL YARD VEHICLE MAINTENANCE GARAGE
36 COAL STORAGE (30 DAY)
37 ACTIVE COAL STORAGE
38 COAL EMERGENCY RECLAIM HOPPER
39 COAL EMERGENCY RECLAIM CONVEYOR
40 COAL CRUSHER BUILDING
41 AS FIRED COAL SAMPLING TOWER
42 WAREHOUSE
44 GUARD HOUSE
45 WASTE TREATMENT PONDS
46 COAL PILE RUNOFF POND
47 LIMESTONE PILE RUNOFF POND
48 RUNOFF WATER PUMP HOUSE
49 INDUSTRIAL WASTE TREATMENT BUILDING
2752'
458'
1000'
575'
PREVAILING WIND
CONSTRUCTION TRACK
FUTURE COOLING TOWER EXTENSION
PUBLIC ROAD
PLANT ACCESS ROAD
SECURITY FENCE
GRAPHIC SCALE IN FEET
SITE PLAN
WorleyParsons
resources & energy
ALSTOM SUPERCRITICAL CFB
CAPTURE READY CASE 2A
SITE PLAN
ARCH D (24" x 36")
ALST-0-SK-012-002-002

Figure 10-5: Case 2a Air Blown Capture Ready CFB Steam Plant Layout

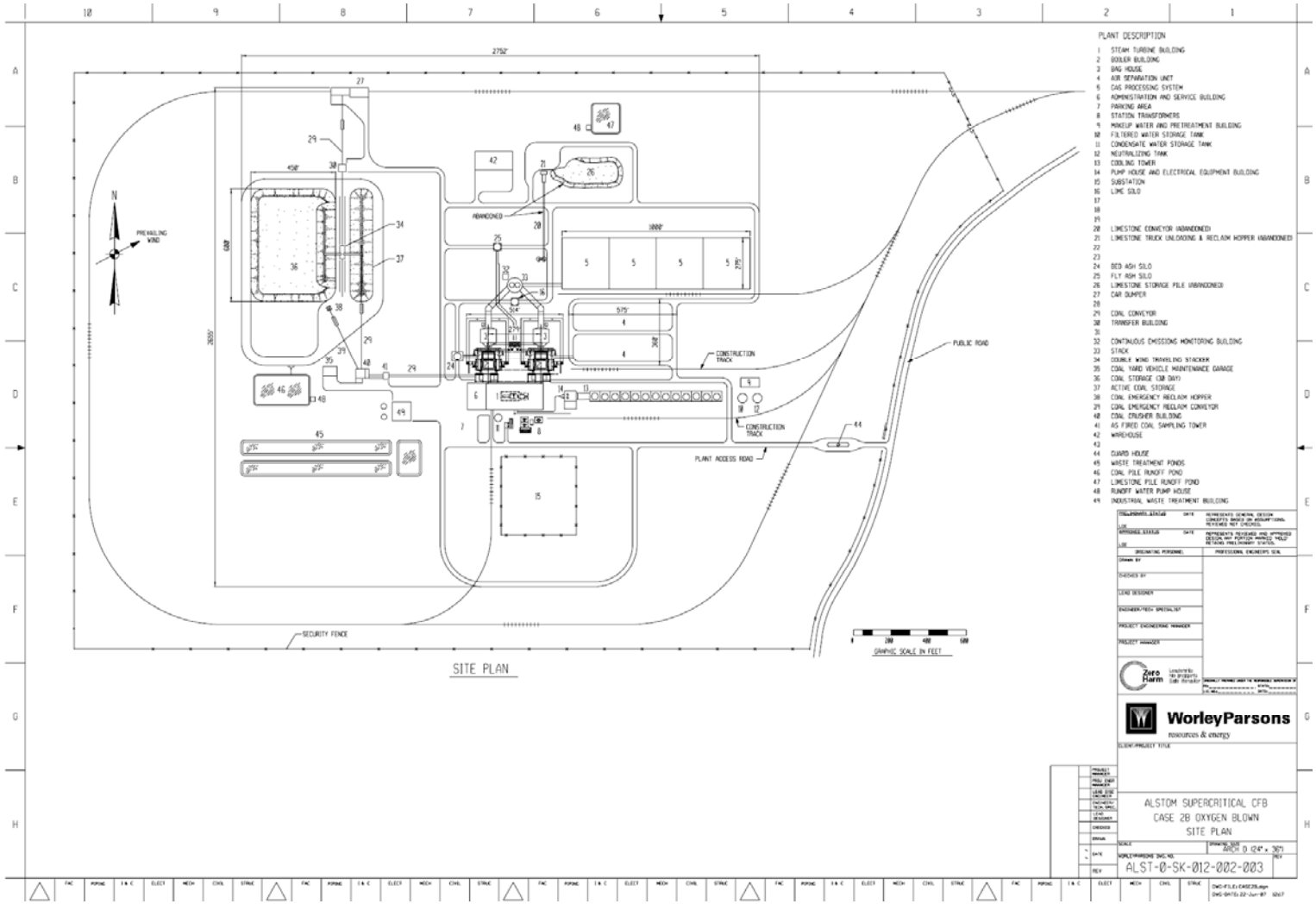

Figure 10-6:Case 2b Oxygen Blown CFB Steam Plant Layout with CO_2 Capture

10.2 Appendix II - Equipment Lists

This section contains the major balance of plant equipment lists corresponding to the power plant configurations described in Section 6. These lists, along with the heat and material balances and general arrangement drawings, were used to generate balance of plant costs.

10.2.1 Base Case (Case 1a)

The following tables describe the BOP equipment for Case 1a (Base Case)

Account 1 Fuel and Sorbent Handling

Equipment No.	Description	Type	Design Condition	Operating Qty.	Spares
1	Bottom Trestle Dumper and Receiving Hoppers	N/A	181 tonne (200 ton)	2	0
2	Feeder	Belt	572 tonne/h (630 tph)	2	0
3	Conveyor No. 1	Belt	1,134 tonne/h (1,250 tph)	1	1
4	Transfer Tower No. 1	Enclosed, w/dust collection	N/A	1	0
5	Conveyor No. 2	Belt w/magnetic separator	1,134 tonne/h (1,250 tph)	1	1
6	As-Received Coal Sampling System	Two-stage	N/A	1	0
7	Stacker	Traveling, linear, double wing	1,134 tonne/h (1,250 tph)	1	0
8	Reclaim Rotary Plow	Low profile, single tunnel	381 tonne (420 ton)	1	1
9	Reclaim Conveyor	Belt w/ scale	381 tonne/h (420 tph)	1	0
10	Conveyor No. 3	Belt w/ tripper	381 tonne/h (420 tph)	1	0
11	Crusher Tower	Enclosed w/dust collection	N/A	1	0
12	Coal Surge Bin w/ Vent Filter	Dual outlet	191 tonne (210 ton)	2	0
13	Crusher	Granulator	191 tonne/h (210 tph)	2	1
14	As-Fired Coal Sampling System	N/A	N/A	1	0
15	Conveyor No. 4	Belt w/tripper	381 tonne/h (420 tph)	1	0
16	Transfer Tower No. 2	Enclosed	N/A	1	0

Equipment No.	Description	Type	Design Condition	Operating Qty.	Spares
17	Conveyor No. 5	Belt w/ tripper	381 tonne/h (420 tph)	1	0
18	Reclaim Hopper (Emergency)	N/A	91 tonne (100 ton)	0	1
19	Reclaim Conveyor (Emergency)	Belt w/scale	381 tonne (420 ton)	0	1
20	Limestone Truck Unloading Hopper	N/A	36 tonne (40 ton)	1	0
21	Limestone Feeder	Belt	109 tonne/h (120 tph)	1	0
22	Limestone Conveyor No. L1	Belt	109 tonne/h (120 tph)	1	0
23	Limestone Reclaim Hopper	N/A	18 tonne (20 ton)	1	0
24	Limestone Reclaim Feeder	Belt	91 tonne/h (100 tph)	1	0
25	Limestone Conveyor No. L2	Belt	91 tonne/h (100 tph)	1	0
26	Limestone Surge Bin	Dual outlet	18 tonne (20 ton)	1	0
27	Limestone Crusher	Impactor reduction	91 tonne/h (100 ton)	1	0
28	Limestone Conveyor No. L3	Belt	91 tonne/h (100 tph)	1	0

Account 2 Coal and Sorbent Feed System

Included with boiler scope supplied by ALSTOM

Account 3 Feedwater and Miscellaneous Systems and Equipment

Equipment No.	Description	Type	Design Condition	Operating Qty.	Spares
1	Demineralized Water Storage Tank	Vertical, cylindrical, outdoor	2,642,238 liters (698,000 gal)	2	0
2	Condensate Pumps	Vertical canned, with VFD	25,741 lpm @ 244 m H2O (6,800 gpm @ 800 ft H2O)	1	1

Equipment No.	Description	Type	Design Condition	Operating Qty.	Spares
3	Deaerator and Storage Tank	Horizontal spray type	2,199,926 kg/h (4,850,000 lb/h), 10 min. tank	1	0
4	Boiler Feed Pump/Turbine	Barrel type, multi-stage, centrifugal	18,549 lpm @ 3,841 m H2O (4,900 gpm @ 12,600 ft H2O)	2	1
5	Startup Boiler Feed Pump, Electric Motor Driven	Barrel type, multi-stage, centrifugal	5,678 lpm @ 3,841 m H2O (1,500 gpm @ 12,600 ft H2O)	2	0
6	LP Feedwater Heater 1	Horizontal U-tube	1,542,216 kg/h (3,400,000 lb/h)	1	0
7	LP Feedwater Heater 2	Horizontal U-tube	1,542,216 kg/h (3,400,000 lb/h)	1	0
8	LP Feedwater Heater 3	Horizontal U-tube	1,542,216 kg/h (3,400,000 lb/h)	1	0
9	LP Feedwater Heater 4	Horizontal U-tube	1,542,216 kg/h (3,400,000 lb/h)	1	0
10	HP Feedwater Heater 6A/6B	Horizontal U-tube	1,102,231 kg/h (2,430,000 lb/h)	2	0
11	HP Feedwater Heater 7A/7B	Horizontal U-tube	1,102,231 kg/h (2,430,000 lb/h)	2	0
12	HP Feedwater heater 8A/8B	Horizontal U-tube	1,102,231 kg/h (2,430,000 lb/h)	2	0
13	Auxiliary Boiler	Shop fabricated, water tube	18,144 kg/h, 2.8 MPa, 343°C (40,000 lb/h, 400 psig, 650°F)	1	0
14	Natural Gas System	Pressure reducing & metering station	46,609 Nm3/h (29,000 scfm)	1	0
15	Service Air Compressors	Flooded Screw	28 m3/min @ 0.7 MPa (1,000 scfm @ 100 psig)	2	1
16	Instrument Air Dryers	Duplex, regenerative	28 m3/min (1,000 scfm)	2	1
17	Closed Cycle Cooling Heat Exchangers	Shell and tube	53 MMkJ/h (50 MMBtu/h) each	2	0
18	Closed Cycle Cooling Water Pumps	Horizontal centrifugal	20,820 lpm @ 30 m H2O (5,500 gpm @ 100 ft H2O)	2	1
19	Engine-Driven Fire Pump	Vertical turbine, diesel engine	3,785 lpm @ 88 m H2O (1,000 gpm @ 290 ft H2O)	1	1

Equipment No.	Description	Type	Design Condition	Operating Qty.	Spares
20	Fire Service Booster Pump	Two-stage horizontal centrifugal	2,650 lpm @ 64 m H2O (700 gpm @ 210 ft H2O)	1	1
21	Raw Water Pumps	Stainless steel, single suction	11,470 lpm @ 43 m H2O (3,030 gpm @ 140 ft H2O)	2	1
22	Filtered Water Pumps	Stainless steel, single suction	492 lpm @ 49 m H2O (130 gpm @ 160 ft H2O)	2	1
23	Filtered Water Tank	Vertical, cylindrical	458,038 liter (121,000 gal)	1	0
24	Makeup Water Demineralizer	Multi-media filter, cartridge filter, RO membrane assembly, electro-deionization unit	719 lpm (190 gpm)	1	1
25	Liquid Waste Treatment System	--	10 years, 24-hour storm	1	0

Account 4 Boiler and Accessories

Included with boiler scope supplied by ALSTOM

Account 5 Flue Gas Cleanup

Included with boiler scope supplied by ALSTOM

Account 5B Carbon Dioxide Processing System

Included with scope supplied by ALSTOM

Account 6 Combustion Turbine and Accessories

NA

Account 7 HRSG Ducting And Stack

Equipment No.	Description	Type	Design Condition	Operating Qty.	Spares
1	Stack	Reinforced concrete, dual flues, FRP lined	152 m (500 ft) high x 5.2 m (17 ft) flue ID	1	0

Account 8 Steam Turbine Generator and Auxiliaries

Equipment No.	Description	Type	Design Condition	Operating Qty.	Spares

Equipment No.	Description	Type	Design Condition	Operating Qty.	Spares
1	Steam Turbine	Included with scope supplied by ALSTOM			
2	Steam Turbine Generator	Included with scope supplied by ALSTOM			
3	Surface Condenser	Single pass, separate shells, multi-pressure including vacuum pumps. 5 min hot well inventory	2,920 MMkJ/h (2,770 MMBtu/h), Inlet water temperature 33ºC (92ºF), Water temperature rise 13ºC (24ºF)	1	0

Account 9 Cooling Water System

Equipment No.	Description	Type	Design Condition	Operating Qty.	Spares
1	Circulating Water Pumps	Vertical, wet pit	458,038 lpm @ 45.7 m 121,000 gpm @ 150 ft)	2	0
2	Cooling Tower	Evaporative, mechanical draft, multi-cell	21°C (70°F) wet bulb / 33°C (92°F) CWT / 46°C (116°F) HWT 3,036 MMkJ/h (2,880 MMBtu/h) heat load	1	0

Account 10 Ash Handling

Equipment No.	Description	Type	Design Condition	Operating Qty.	Spares
1	Bed Ash Air Compressor	--	2,539 Nm3/h @ 0.25 MPa (1580 scfm @ 36 psi)	4	0
2	Lock hoppers	--	--	12	4
3	Bed Ash Silo	Reinforced concrete	4,717 tonnes (5,200 tons)	1	0
4	Mixer unloader	--	179 tonnes/h (200 tph)	1	0

Equipment No.	Description	Type	Design Condition	Operating Qty.	Spares
5	Bed ash silo vent fan	Centrifugal	10,125 Nm3/h @ 0.03 MPa (6300 scfm @ 5 psi)	1	1
6	Slide Gate Valves	--	--	2	0
7	Fly Ash Air Compressor	--	1,270 Nm3/h @ 0.2 MPa (790 scfm @ 24 psi)	4	0
9	Lock hoppers	--	--	16	0
10	Fly Ash Silo	Reinforced concrete	4,717 tonne (5,200 ton)	1	0
11	Slide Gate Valves	--	--	2	0
12	Fly ash Mixer Unloader	--	179 tonnes/h (200 tph)	1	0
13	Fly ash silo vent fan	Centrifugal	5,143 Nm3/h @ 0.03 MPa (3200 scfm @ 5 psi)	1	1

Account 11 Accessory Electric Plant

Equipment No.	Description	Type	Design Condition	Operating Qty.	Spares
1	STG Transformer	Oil-filled	24 kV/345 kV, 730 MVA, 3-ph, 60 Hz	1	0
2	Auxiliary Transformer	Oil-filled	24 kV/4.16 kV, 58 MVA, 3-ph, 60 Hz	1	1
3	Low Voltage Transformer	Dry ventilated	4.16 kV/480 V, 9 MVA, 3-ph, 60 Hz	1	1
4	STG Isolated Phase Bus Duct and Tap Bus	Aluminum, self-cooled	24 kV, 3-ph, 60 Hz	1	0
5	Medium Voltage Switchgear	Metal clad	4.16 kV, 3-ph, 60 Hz	1	1
6	Low Voltage Switchgear	Metal enclosed	480 V, 3-ph, 60 Hz	1	1

Equipment No.	Description	Type	Design Condition	Operating Qty.	Spares
7	Emergency Diesel Generator	Sized for emergency shutdown	750 kW, 480 V, 3-ph, 60 Hz	1	0

Account 12 Instrumentation and Control

Equipment No.	Description	Type	Design Condition	Operating Qty.	Spares
1	DCS - Main Control	Monitor/keyboard; Operator printer (laser color); Engineering printer (laser B&W)	Operator stations/printers and engineering stations/printers	1	0
2	DCS - Processor	Microprocessor with redundant input/output	N/A	1	0
3	DCS - Data Highway	Fiber optic	Fully redundant, 25% spare	1	0

10.2.2 Capture Ready Case (Case 2a)

The following tables describe the BOP equipment for Case 2a (Capture Ready)

Account 1 Fuel and Sorbent Handling

Equipment No.	Description	Type	Design Condition	Operating Qty.	Spares
1	Bottom Trestle Dumper and Receiving Hoppers	N/A	181 tonne (200 ton)	2	0
2	Feeder	Belt	572 tonne/h (630 tph)	2	0
3	Conveyor No. 1	Belt	1,134 tonne/h (1,250 tph)	1	1
4	Transfer Tower No. 1	Enclosed, w/dust collection	N/A	1	0
5	Conveyor No. 2	Belt w/magnetic separator	1,134 tonne/h (1,250 tph)	1	1
6	As-Received Coal Sampling System	Two-stage	N/A	1	0
7	Stacker	Traveling, linear, double wing	1,134 tonne/h (1,250 tph)	1	0
8	Reclaim Rotary Plow	Low profile, single tunnel	381 tonne (420 ton)	1	1
9	Reclaim Conveyor	Belt w/ scale	381 tonne/h (420 tph)	1	0
10	Conveyor No. 3	Belt w/ tripper	381 tonne/h (420 tph)	1	0
11	Crusher Tower	Enclosed w/dust collection	N/A	1	0
12	Coal Surge Bin w/ Vent Filter	Dual outlet	191 tonne (210 ton)	2	0
13	Crusher	Granulator	191 tonne/h (210 tph)	2	1
14	As-Fired Coal Sampling System	N/A	N/A	1	0
15	Conveyor No. 4	Belt w/tripper	381 tonne/h (420 tph)	1	0
16	Transfer Tower No. 2	Enclosed	N/A	1	0
17	Conveyor No. 5	Belt w/ tripper	381 tonne/h (420 tph)	1	0
18	Reclaim Hopper (Emergency)	N/A	91 tonne (100 ton)	0	1

Equipment No.	Description	Type	Design Condition	Operating Qty.	Spares
19	Reclaim Conveyor (Emergency)	Belt w/scale	381 tonne (420 ton)	0	1
20	Limestone Truck Unloading Hopper	N/A	36 tonne (40 ton)	1	0
21	Limestone Feeder	Belt	109 tonne/h (120 tph)	1	0
22	Limestone Conveyor No. L1	Belt	109 tonne/h (120 tph)	1	0
23	Limestone Reclaim Hopper	N/A	18 tonne (20 ton)	1	0
24	Limestone Reclaim Feeder	Belt	91 tonne/h (100 tph)	1	0
25	Limestone Conveyor No. L2	Belt	91 tonne/h (100 tph)	1	0
26	Limestone Surge Bin	Dual outlet	18 tonne (20 ton)	1	0
27	Limestone Crusher	Impactor reduction	91 tonne/h (100 ton)	1	0
28	Limestone Conveyor No. L3	Belt	91 tonne/h (100 tph)	1	0

Account 2 Coal and Sorbent Feed System

Included with boiler scope supplied by ALSTOM

Account 3 Feedwater and Miscellaneous Systems and Equipment

Equipment No.	Description	Type	Design Condition	Operating Qty.	Spares
1	Demineralized Water Storage Tank	Vertical, cylindrical, outdoor	2,642,238 liters (700,000 gal)	2	0
2	Condensate Pumps	Vertical canned, with VFD	33,312 lpm @ 244 m H2O (8,800 gpm @ 800 ft H2O)	1	1
3	Deaerator and Storage Tank	Horizontal spray type	3,138,165 kg/h (7,700,000 lb/h), 10 min. tank	1	0

Equipment No.	Description	Type	Design Condition	Operating Qty.	Spares
4	Boiler Feed Pump/Turbine	Barrel type, multi-stage, centrifugal	25,362 lpm @ 3,841 m H2O (6,700 gpm @ 12,600 ft H2O)	2	1
5	Startup Boiler Feed Pump, Electric Motor Driven	Barrel type, multi-stage, centrifugal	7,571 lpm @ 3,841 m H2O (2,000 gpm @ 12,600 ft H2O)	2	1
6	LP Feedwater Heater 1	Horizontal U-tube	1,542,216 kg/h (3,400,000 lb/h)	1	0
7	LP Feedwater Heater 2	Horizontal U-tube	1,542,216 kg/h (3,400,000 lb/h)	1	0
8	LP Feedwater Heater 3	Horizontal U-tube	1,542,216 kg/h (3,400,000 lb/h)	1	0
9	LP Feedwater Heater 4	Horizontal U-tube	1,542,216 kg/h (3,400,000 lb/h)	1	0
10	HP Feedwater Heater 6A/6B	Horizontal U-tube	1,519,536 kg/h (3,350,000 lb/h)	2	0
11	HP Feedwater Heater 7A/7B	Horizontal U-tube	1,519,536 kg/h (3,350,000 lb/h)	2	0
12	HP Feedwater heater 8A/8B	Horizontal U-tube	1,519,536 kg/h (3,350,000 lb/h)	2	0
13	Auxiliary Boiler	Shop fabricated, water tube	18,144 kg/h, 2.8 MPa, 343°C (40,000 lb/h, 400 psig, 650°F)	1	0
14	Natural Gas System	Pressure reducing & metering station	46,609 Nm3/h (29,000 scfm)	1	0
15	Service Air Compressors	Flooded Screw	28 m3/min @ 0.7 MPa (1,000 scfm @ 100 psig)	2	1
16	Instrument Air Dryers	Duplex, regenerative	28 m3/min (1,000 scfm)	2	1
17	Closed Cycle Cooling Heat Exchangers	Shell and tube	53 MMkJ/h (50 MMBtu/h) each	2	0
18	Closed Cycle Cooling Water Pumps	Horizontal centrifugal	20,820 lpm @ 30 m H2O (5,500 gpm @ 100 ft H2O)	2	1
19	Engine-Driven Fire Pump	Vertical turbine, diesel engine	3,785 lpm @ 88 m H2O (1,000 gpm @ 290 ft H2O)	1	1
20	Fire Service Booster Pump	Two-stage horizontal centrifugal	2,650 lpm @ 64 m H2O (700 gpm @ 210 ft H2O)	1	1

Equipment No.	Description	Type	Design Condition	Operating Qty.	Spares
21	Raw Water Pumps	Stainless steel, single suction	16,050 lpm @ 43 m H2O (4,240 gpm @ 140 ft H2O)	2	1
22	Filtered Water Pumps	Stainless steel, single suction	681 lpm @ 49 m H2O (180 gpm @ 160 ft H2O)	2	1
23	Filtered Water Tank	Vertical, cylindrical	458,038 liter (121,000 gal)	1	0
24	Makeup Water Demineralizer	Multi-media filter, cartridge filter, RO membrane assembly, electro-deionization unit	1,022 lpm (270 gpm)	1	1
25	Liquid Waste Treatment System	--	10 years, 24-hour storm	1	0

Account 4 Boiler and Accessories

Included with boiler scope supplied by ALSTOM

Account 5 Flue Gas Cleanup

Included with boiler scope supplied by ALSTOM

Account 5B Carbon Dioxide Processing System

Included with scope supplied by ALSTOM

Account 6 Combustion Turbine and Accessories

NA

Account 7 HRSG Ducting and Stack

Equipment No.	Description	Type	Design Condition	Operating Qty.	Spares
1	Stack	Reinforced concrete, dual flues with FRP liner	152 m (500 ft) high x 5.2 m (17 ft) flue ID	1	0

Account 8 Steam Turbine Generator and Auxiliaries

Equipment No.	Description	Type	Design Condition	Operating Qty.	Spares

Equipment No.	Description	Type	Design Condition	Operating Qty.	Spares
1	Steam Turbine	Included with scope supplied by ALSTOM			
2	Steam Turbine Generator	Included with scope supplied by ALSTOM			
1	Surface Condenser	Single pass, separate shells, multi-pressure including vacuum pumps. 5 min hot well inventory	4,406 MMkJ/h (4,180 MMBtu/h), Inlet water temperature 33ºC (92ºF), Water temperature rise 13ºC (24ºF)	1	0

Account 9 Cooling Water System

Equipment No.	Description	Type	Design Condition	Operating Qty.	Spares
1	Circulating Water Pumps	Vertical, wet pit	458,038 lpm @ 45.7 m (121,000 gpm @ 150 ft)	2	0
2	Cooling Tower	Evaporative, mechanical draft, nine cells	21°C (70°F) wet bulb / 33°C (92°F) CWT / 46°C (116°F) HWT 3,036 MMkJ/h (2,880 MMBtu/h) heat load	1	0

Account 10 Ash Handling

Equipment No.	Description	Type	Design Condition	Operating Qty.	Spares
1	Bed Ash Air Compressor	--	2,539 Nm3/h @ 0.25 MPa (1580 scfm @ 36 psi)	4	0
2	Lock hoppers	--	--	12	4

Equipment No.	Description	Type	Design Condition	Operating Qty.	Spares
3	Bed Ash Silo	Reinforced concrete	4,717 tonnes (5,200 tons)	1	0
4	Mixer Unloader	--	179 tonnes/h (200 tph)	1	0
5	Bed ash silo vent fan	Centrifugal	10,125 Nm3/h @ 0.03 MPa (6300 scfm @ 5 psi)	1	1
6	Slide Gate Valves	--	--	2	0
7	Fly Ash Air Compressor	--	1,270 Nm3/h @ 0.2 MPa (790 scfm @ 24 psi)	4	0
9	Lock hoppers	--	--	16	0
10	Fly Ash Silo	Reinforced concrete	4,717 tonne (5,200 ton)	1	0
11	Slide Gate Valves	--	--	2	0
12	Fly ash Mixer Unloader	--	179 tonnes/h (200 tph)	1	0
13	Fly ash silo vent fan	Centrifugal	5,143 Nm3/h @ 0.03 MPa (3200 scfm @ 5 psi)	1	1

Account 11 Accessory Electric Plant

Equipment No.	Description	Type	Design Condition	Operating Qty.	Spares
1	STG Transformer	Oil-filled	24 kV/345 kV, 730 MVA, 3-ph, 60 Hz	1	0
2	Auxiliary Transformer	Oil-filled	24 kV/4.16 kV, 58 MVA, 3-ph, 60 Hz	1	1
3	Low Voltage Transformer	Dry ventilated	4.16 kV/480 V, 9 MVA, 3-ph, 60 Hz	1	1
4	STG Isolated Phase Bus Duct and Tap Bus	Aluminum, self-cooled	24 kV, 3-ph, 60 Hz	1	0

Equipment No.	Description	Type	Design Condition	Operating Qty.	Spares
5	Medium Voltage Switchgear	Metal clad	4.16 kV, 3-ph, 60 Hz	1	1
6	Low Voltage Switchgear	Metal enclosed	480 V, 3-ph, 60 Hz	1	1
7	Emergency Diesel Generator	Sized for emergency shutdown	750 kW, 480 V, 3-ph, 60 Hz	1	0

Account 12 Instrumentation and Control

Equipment No.	Description	Type	Design Condition	Operating Qty.	Spares
1	DCS - Main Control	Monitor/keyboard; Operator printer (laser color); Engineering printer (laser B&W)	Operator stations/printers and engineering stations/printers	1	0
2	DCS - Processor	Microprocessor with redundant input/output	N/A	1	0
3	DCS - Data Highway	Fiber optic	Fully redundant, 25% spare	1	0

10.2.3 Capture Ready Converted to Oxygen Firing (Case 2b)

The following tables describe the BOP equipment for Case 2b (Capture Ready converted to oxygen firing and CO_2 capture)

Account 1 Fuel and Sorbent Handling

The existing Capture ready plant (Case 2a) coal handling system will operate 6 days/week and three 8-hour shifts per day (vs. 5 days/week and two 8-hour shift per day for Case 2a) to handle increased coal feed rate.

Coal inventory in the existing active storage coal pile will be reduced from 7 days to 5 days of operation. Coal inventory in the long-term storage pile will be increased and maintained at 30 days of operation.

The existing Capture ready plant limestone handling equipment will be removed from operation and abandoned in place.

The following new lime handling system is added as a part of Oxyfuel conversion.

Equipment No.	Description	Type	Design Condition	Operating Qty.	Spares
1	Lime Truck Unloading	Pipeline with Quick disconnect fitting	45 tonne/h (50 tph)	1	1
2	Lime Silo	Reinforced concrete	3,084 tonne (3,400 ton)	1	0
3	Lime Feeder	Rotary	20 tonne/h (22 tph)	1	1
4	Lime Transfer Compressor	--	1,607 Nm3/h @ 0.17 MPa (1000 scfm @ 25 psi)	1	1
5	Lime Day Bin	Carbon steel	245 tonne (270 tons)	2	0
6	Lime Feeder	Rotary	10 tonne/h (11 tph)	2	0
7	Lime Feed Compressor	--	804 Nm3/h @ 0.17 MPa (500 scfm @ 25 psi)	2	1

Account 2 Coal and Sorbent Feed System

Included with boiler scope supplied by ALSTOM

Account 3 Feedwater and Miscellaneous Systems and Equipment

The existing capture ready plant (Case 2a) feedwater and miscellaneous systems have been sized to meet increased requirements of the plant converted to Oxyfuel operation.

Account 4 Boiler and Accessories

Included with boiler scope supplied by ALSTOM

Account 5 Flue Gas Cleanup

Included with boiler scope supplied by ALSTOM

Account 5B Carbon Dioxide Processing System

Included with scope supplied by ALSTOM

Account 6 Combustion Turbine and Accessories

NA

Account 7 HRSG Ducting and Stack

The existing capture ready plant (Case 2a) stack and ducting is sufficient for part load air-fired operation during startup. A relatively small amount of flue gas (~3% of Case 2a flow) will be vented through the stack during the oxygen fired operation.

Account 8 Steam Turbine Generator and Auxiliaries

The existing capture ready plant (Case 2a) condenser system has been sized to meet increased requirements of the plant converted to Oxyfuel operation. Steam turbine-generator modifications are included in ALSTOM's scope.

Account 9 Cooling Water System

The following additional equipment will be added as a part of Oxyfuel conversion.

Equipment No.	Description	Type	Design Condition	Operating Qty.	Spares
1	Circulating Water Pump	Vertical, wet pit	458,038 lpm @ 45.7 m (121,000 gpm @ 150 ft)	1	0
2	Cooling Tower	Evaporative, mechanical draft, four-cell extension	21°C (70°F) wet bulb / 33°C (92°F) CWT / 46°C (116°F) HWT 1,486 MMkJ/h (1,410 MMBtu/h) additional heat load	1	0

Account 10 Ash Handling

The existing Capture ready plant (Case 2a) ash handling system will operate 6 days/week and 14 hours per day (vs. 5 days/week and two 12 hours shift per day for Case 2a) to handle increased ash flow rate.

Retention time of the existing ash silos will be reduced from 72 hours to 55 hours.

The following additional equipment will be added as a part of Oxyfuel conversion.

Equipment No.	Description	Type	Design Condition	Operating Qty.	Spares
1	Bed Ash Air Compressor	--	2,539 Nm3/h @ 0.25 MPa (1580 scfm @ 36 psi)	1	0
2	Fly Ash Air Compressor	--	1,270 Nm3/h @ 0.2 MPa (790 scfm @ 24 psi)	1	0

Account 11 Accessory Electric Plant

The following additional equipment will be added as a part of Oxyfuel conversion.

Equipment No.	Description	Type	Design Condition	Operating Qty.	Spares
1	ASU & Gas Processing Auxiliary Transformer	Oil-filled	24 kV/13.8 kV, 220 MVA, 3-ph, 60 Hz	1	1
2	ASU & Gas Processing Medium voltage Transformer	Oil-filled	24 kV/4.16 kV, 90 MVA, 3-ph, 60 Hz	1	1
3	ASU & Gas Processing Low Voltage Transformer	Dry ventilated	4.16 kV/480 V, 10 MVA, 3-ph, 60 Hz	1	1
4	ASU & Gas Processing Isolated Phase Bus Duct and Tap Bus	Aluminum, self-cooled	13.8 kV, 3-ph, 60 Hz	1	0
5	ASU & Gas Processing Voltage Switchgear	Metal clad	13.8 kV, 3-ph, 60 Hz	1	0
6	ASU & Gas Processing Medium Voltage Switchgear	Metal clad	4.16 kV, 3-ph, 60 Hz	1	0
7	ASU Low Voltage Switchgear	Metal enclosed	480 V, 3-ph, 60 Hz	1	0

Account 12 Instrumentation and Control

The existing capture ready plant (Case 2a) DCS system has been selected to meet increased requirements of the plant converted to Oxyfuel operation.

10.3 Appendix III - Detailed Balance of Plant Cost Breakdowns

This section shows detailed BOP cost breakdowns (two levels) for the cases in this study as listed below:

- Case 1a - Air Fired CFB Boiler (Base Case)
- Case 1b - Base Case Retrofit With O_2 Firing And CO_2 Capture
- Case 2a - Air Fired Capture Ready CFB Boiler
- Case 2b - Capture Ready CFB Boiler (Case 2a) Retrofit with O_2 firing and CO_2 Capture

Note: Detailed second level BOP costs for Case 1b (Base Case retrofit with O_2 firing and CO_2 capture) were not developed.

Table 10-1: Detailed BOP Costs for Case 1a (Base Case)

	Client:	Alstom								Report Date:	02-Jul-07	
	Project:	SC CFB Oxyfuel Capture Ready										
	TOTAL PLANT COST SUMMARY											
	Case:	Case 1a - Air Blown										
	Plant Size:	635.7	MW,net	Estimate Type:		Conceptual		Cost Base (May)		2007	($x1000)	
Acct		Equipment	Material	Labor		Sales	Bare Erected	Eng'g CM	Other	Contingency	TOTAL PLANT COST	
No.	Item/Description	Cost	Cost	Direct	Indirect	Tax	Cost $	H.O.& Fee	Costs	Project	$	$/kW
1	COAL & SORBENT HANDLING	$20,203	$4,793	$10,616	$0	$0	**$35,612**	$3,795	$1,603	$0	**$41,010**	**$65**
2	COAL & SORBENT PREP & FEED	$11,403	$458	$2,759	$0	$0	**$14,620**	$1,529	$658	$0	**$16,807**	**$26**
3	FEEDWATER & MISC. BOP SYSTEMS	$44,778	$0	$19,481	$0	$0	**$64,259**	$7,004	$2,892	$0	**$74,155**	**$117**
4	FLUIDIZED BED BOILER											
4.1	Fluidized Bed Boiler,w/o BHse & Accessories	$0	$0	$0	$0	$0	**$0**	$0	$0	$0	**$0**	**$0**
4.2	Air Separation Unit	$0	$0	$0	$0	$0	**$0**	$0	$0	$0	**$0**	**$0**
4.3	Open	$0	$0	$0	$0	$0	**$0**	$0	$0	$0	**$0**	**$0**
4.4-4.9	Boiler BOP	$0	$0	$0	$0	$0	**$0**	$0	$0	$0	**$0**	**$0**
	SUBTOTAL 4	**$0**	**$0**	**$0**	**$0**	**$0**	**$0**	**$0**	**$0**	**$0**	**$0**	**$0**
5	FLUE GAS CLEANUP	$1,313	$0	$1,331	$0	$0	**$2,643**	$305	$119	$0	**$3,068**	**$5**
5B	CO2 REMOVAL & COMPRESSION	$0	$0	$0	$0	$0	**$0**	$0	$0	$0	**$0**	**$0**
6	COMBUSTION TURBINE/ACCESSORIES											
6.1	Combustion Turbine Generator	N/A	$0	N/A	$0	$0	**$0**	$0	$0	$0	**$0**	**$0**
6.2-6.9	Combustion Turbine Accessories	$0	$0	$0	$0	$0	**$0**	$0	$0	$0	**$0**	**$0**
	SUBTOTAL 6	**$0**	**$0**	**$0**	**$0**	**$0**	**$0**	**$0**	**$0**	**$0**	**$0**	**$0**
7	HRSG, DUCTING & STACK											
7.1	Heat Recovery Steam Generator	N/A	$0	N/A	$0	$0	**$0**	$0	$0	$0	**$0**	**$0**
7.2-7.9	HRSG Accessories, Ductwork and Stack	$19,003	$171	$11,101	$0	$0	**$30,274**	$3,347	$1,362	$0	**$34,983**	**$55**
	SUBTOTAL 7	**$19,003**	**$171**	**$11,101**	**$0**	**$0**	**$30,274**	**$3,347**	**$1,362**	**$0**	**$34,983**	**$55**
8	STEAM TURBINE GENERATOR											
8.1	Steam TG & Accessories	$0	$0	$0	$0	$0	**$0**	$0	$0	$0	**$0**	**$0**
8.2-8.9	Turbine Plant Auxiliaries and Steam Piping	$26,809	$1,207	$13,897	$0	$0	**$41,913**	$4,383	$1,886	$0	**$48,181**	**$76**
	SUBTOTAL 8	**$26,809**	**$1,207**	**$13,897**	**$0**	**$0**	**$41,913**	**$4,383**	**$1,886**	**$0**	**$48,181**	**$76**
9	COOLING WATER SYSTEM	$6,061	$7,442	$11,359	$0	$0	**$24,862**	$2,786	$1,119	$0	**$28,767**	**$45**
10	ASH/SPENT SORBENT HANDLING SYS	$9,204	$536	$6,430	$0	$0	**$16,169**	$1,827	$728	$0	**$18,723**	**$29**
11	ACCESSORY ELECTRIC PLANT	$12,611	$4,235	$12,316	$0	$0	**$29,162**	$3,113	$1,312	$0	**$33,588**	**$53**
12	INSTRUMENTATION & CONTROL	$10,519	$0	$10,661	$0	$0	**$21,180**	$2,265	$953	$0	**$24,399**	**$38**
13	IMPROVEMENTS TO SITE	$3,157	$1,815	$6,025	$0	$0	**$10,997**	$1,293	$495	$0	**$12,785**	**$20**
14	BUILDINGS & STRUCTURES	$0	$28,203	$25,337	$0	$0	**$53,540**	$5,742	$2,409	$0	**$61,691**	**$97**
	TOTAL COST	**$165,060**	**$48,860**	**$131,312**	**$0**	**$0**	**$345,232**	**$37,389**	**$15,535**	**$0**	**$398,156**	**$626**

	Client:	Alstom								Report Date:	02-Jul-07	
	Project:	SC CFB Oxyfuel Capture Ready										
					TOTAL PLANT COST SUMMARY							
	Case:	Case 1a - Air Blown										
	Plant Size:	635.7	MW,net	Estimate Type:		Conceptual		Cost Base (May)		2007	($x1000)	
Acct		Equipment	Material	Labor		Sales	Bare Erected	Eng'g CM	Other	Contingency	TOTAL PLANT COST	
No.	Item/Description	Cost	Cost	Direct	Indirect	Tax	Cost $	H.O.& Fee	Costs	Project	$	$/kW
1	COAL & SORBENT HANDLING											
1.1	Coal Receive & Unload	$3,817	$0	$1,651	$0	$0	$5,468	$582	$246	$0	$6,296	$10
1.2	Coal Stackout & Reclaim	$4,933	$0	$1,164	$0	$0	$6,097	$637	$274	$0	$7,009	$11
1.3	Coal Conveyors	$4,586	$0	$1,047	$0	$0	$5,633	$588	$254	$0	$6,475	$10
1.4	Other Coal Handling	$1,200	$0	$242	$0	$0	$1,442	$150	$65	$0	$1,657	$3
1.5	Sorbent Receive & Unload	$215	$0	$61	$0	$0	$276	$29	$12	$0	$317	$0
1.6	Sorbent Stackout & Reclaim	$3,468	$0	$602	$0	$0	$4,070	$422	$183	$0	$4,675	$7
1.7	Sorbent Conveyors	$1,237	$268	$287	$0	$0	$1,793	$185	$81	$0	$2,058	$3
1.8	Other Sorbent Handling	$747	$175	$371	$0	$0	$1,294	$136	$58	$0	$1,488	$2
1.9	Coal & Sorbent Hnd.Foundations	$0	$4,350	$5,189	$0	$0	$9,540	$1,065	$429	$0	$11,034	$17
	SUBTOTAL 1.	**$20,203**	**$4,793**	**$10,616**	**$0**	**$0**	**$35,612**	**$3,795**	**$1,603**	**$0**	**$41,010**	**$65**
2	COAL & SORBENT PREP & FEED											
2.1	Coal Crushing & Drying	$2,206	$0	$407	$0	$0	$2,613	$272	$118	$0	$3,002	$5
2.2	Coal Conveyor to Storage	$7,059	$0	$1,459	$0	$0	$8,518	$887	$383	$0	$9,789	$15
2.3	Coal Injection System	$0	$0	$0	$0	$0	$0	$0	$0	$0	$0	$0
2.4	Misc.Coal Prep & Feed	$0	$0	$0	$0	$0	$0	$0	$0	$0	$0	$0
2.5	Sorbent Prep Equipment	$1,427	$0	$281	$0	$0	$1,707	$178	$77	$0	$1,962	$3
2.6	Sorbent Storage & Feed	$712	$0	$257	$0	$0	$969	$102	$44	$0	$1,115	$2
2.7	Sorbent Injection System	$0	$0	$0	$0	$0	$0	$0	$0	$0	$0	$0
2.8	Booster Air Supply System	$0	$0	$0	$0	$0	$0	$0	$0	$0	$0	$0
2.9	Coal & Sorbent Feed Foundation	$0	$458	$355	$0	$0	$813	$90	$37	$0	$939	$1
	SUBTOTAL 2.	**$11,403**	**$458**	**$2,759**	**$0**	**$0**	**$14,620**	**$1,529**	**$658**	**$0**	**$16,807**	**$26**
3	FEEDWATER & MISC. BOP SYSTEMS											
3.1	FeedwaterSystem	$16,904	$0	$5,702	$0	$0	$22,606	$2,362	$1,017	$0	$25,985	$41
3.2	Water Makeup & Pretreating	$5,882	$0	$1,793	$0	$0	$7,675	$865	$345	$0	$8,886	$14
3.3	Other Feedwater Subsystems	$9,451	$0	$3,784	$0	$0	$13,234	$1,412	$596	$0	$15,242	$24
3.4	Service Water Systems	$853	$0	$439	$0	$0	$1,292	$145	$58	$0	$1,495	$2
3.5	Other Boiler Plant Systems	$5,173	$0	$4,512	$0	$0	$9,685	$1,094	$436	$0	$11,215	$18
3.6	FO Supply Sys & Nat Gas	$276	$0	$327	$0	$0	$603	$68	$27	$0	$698	$1
3.7	Waste Treatment Equipment	$2,949	$0	$1,592	$0	$0	$4,541	$527	$204	$0	$5,272	$8
3.8	Misc. Equip.(cranes,AirComp.,Comm.)	$3,291	$0	$1,331	$0	$0	$4,622	$532	$208	$0	$5,362	$8
	SUBTOTAL 3.	**$44,778**	**$0**	**$19,481**	**$0**	**$0**	**$64,259**	**$7,004**	**$2,892**	**$0**	**$74,155**	**$117**
4	FLUIDIZED BED BOILER											
4.1	Fluidized Bed Boiler,w/o BHse & Accessories	$0	$0	$0	$0	$0	$0	$0	$0	$0	$0	$0
4.2	Air Separation Unit	$0	$0	$0	$0	$0	$0	$0	$0	$0	$0	$0
4.3	Open	$0	$0	$0	$0	$0	$0	$0	$0	$0	$0	$0
4.4	Boiler BoP (Fluidizing Air Fans)	$0	$0	$0	$0	$0	$0	$0	$0	$0	$0	$0
4.5	Primary Air System (Fans)	w/4.1	$0	w/4.1	$0	$0	$0	$0	$0	$0	$0	$0
4.6	Secondary Air System (Fans)	w/4.1	$0	w/4.1	$0	$0	$0	$0	$0	$0	$0	$0
4.8	Major Component Rigging	$0	w/4.1	w/4.1	$0	$0	$0	$0	$0	$0	$0	$0
4.9	Boiler Foundations	$0	w/14.1	w/14.1	$0	$0	$0	$0	$0	$0	$0	$0
	SUBTOTAL 4.	**$0**	**$0**	**$0**	**$0**	**$0**	**$0**	**$0**	**$0**	**$0**	**$0**	**$0**

	Client:	Alstom								Report Date:	02-Jul-07	
	Project:	SC CFB Oxyfuel Capture Ready										
		TOTAL PLANT COST SUMMARY										
	Case:	Case 1a - Air Blown										
	Plant Size:	635.7	MW.net	Estimate Type:		Conceptual		Cost Base (May)		2007	($x1000)	
Acct		Equipment	Material	Labor		Sales	Bare Erected	Eng'g CM	Other	Contingency	TOTAL PLANT COST	
No.	Item/Description	Cost	Cost	Direct	Indirect	Tax	Cost $	H.O.& Fee	Costs	Project	$	$/kW
5	FLUE GAS CLEANUP											
5.1	Absorber Vessels & Accessories	$0	$0	$0	$0	$0	$0	$0	$0	$0	$0	$0
5.2	Other FGD	$0	$0	$0	$0	$0	$0	$0	$0	$0	$0	$0
5.3	Bag House & Accessories	$0	$0	$0	$0	$0	$0	$0	$0	$0	$0	$0
5.4	Other Particulate Removal Materials	$1,313	$0	$1,331	$0	$0	$2,643	$305	$119	$0	$3,068	$5
5.5	PFWH & Gas Cooler	$0	$0	$0	$0	$0	$0	$0	$0	$0	$0	$0
5.6	Gas Processing System	$0	$0	$0	$0	$0	$0	$0	$0	$0	$0	$0
5.9	Open	$0	$0	$0	$0	$0	$0	$0	$0	$0	$0	$0
	SUBTOTAL 5.	**$1,313**	**$0**	**$1,331**	**$0**	**$0**	**$2,643**	**$305**	**$119**	**$0**	**$3,068**	**$5**
5B	CO2 REMOVAL & COMPRESSION											
5B.1	CO2 Removal System	$0	$0	$0	$0	$0	$0	$0	$0	$0	$0	$0
5B.2	CO2 Compression & Drying	$0	$0	$0	$0	$0	$0	$0	$0	$0	$0	$0
	SUBTOTAL 5B.	**$0**	**$0**	**$0**	**$0**	**$0**	**$0**	**$0**	**$0**	**$0**	**$0**	**$0**
6	COMBUSTION TURBINE/ACCESSORIES											
6.1	Combustion Turbine Generator	N/A	$0	N/A	$0	$0	$0	$0	$0	$0	$0	$0
6.2	Combustion Turbine Accessories	$0	$0	$0	$0	$0	$0	$0	$0	$0	$0	$0
6.3	Compressed Air Piping	$0	$0	$0	$0	$0	$0	$0	$0	$0	$0	$0
6.9	Combustion Turbine Foundations	$0	$0	$0	$0	$0	$0	$0	$0	$0	$0	$0
	SUBTOTAL 6.	**$0**	**$0**	**$0**	**$0**	**$0**	**$0**	**$0**	**$0**	**$0**	**$0**	**$0**
7	HRSG, DUCTING & STACK											
7.1	Heat Recovery Steam Generator	N/A	$0	N/A	$0	$0	$0	$0	$0	$0	$0	$0
7.2	ID Fans	$0	$0	$0	$0	$0	$0	$0	$0	$0	$0	$0
7.3	Ductwork	$7,103	$0	$4,322	$0	$0	$11,425	$1,185	$514	$0	$13,123	$21
7.4	Stack	$11,900	$0	$6,595	$0	$0	$18,495	$2,123	$832	$0	$21,450	$34
7.9	Duct & Stack Foundations	$0	$171	$184	$0	$0	$355	$39	$16	$0	$410	$1
	SUBTOTAL 7.	**$19,003**	**$171**	**$11,101**	**$0**	**$0**	**$30,274**	**$3,347**	**$1,362**	**$0**	**$34,983**	**$55**
8	STEAM TURBINE GENERATOR											
8.1	Steam TG & Accessories	$0	$0	$0	$0	$0	$0	$0	$0	$0	$0	$0
8.2	Turbine Plant Auxiliaries	$384	$0	$779	$0	$0	$1,163	$135	$52	$0	$1,351	$2
8.3	Condenser & Auxiliaries	$7,328	$0	$2,397	$0	$0	$9,725	$1,110	$438	$0	$11,273	$18
8.4	Steam Piping	$19,097	$0	$8,918	$0	$0	$28,015	$2,798	$1,261	$0	$32,074	$50
8.9	TG Foundations	$0	$1,207	$1,803	$0	$0	$3,010	$339	$135	$0	$3,484	$5
	SUBTOTAL 8.	**$26,809**	**$1,207**	**$13,897**	**$0**	**$0**	**$41,913**	**$4,383**	**$1,886**	**$0**	**$48,181**	**$76**
9	COOLING WATER SYSTEM											
9.1	Cooling Towers	$3,216	$0	$1,636	$0	$0	$4,852	$556	$218	$0	$5,627	$9
9.2	Circulating Water Pumps	$1,263	$0	$185	$0	$0	$1,448	$148	$65	$0	$1,661	$3
9.3	Circ.Water System Auxiliaries	$589	$0	$74	$0	$0	$663	$75	$30	$0	$769	$1
9.4	Circ.Water Piping	$0	$4,670	$4,287	$0	$0	$8,957	$998	$403	$0	$10,358	$16
9.5	Make-up Water System	$518	$0	$655	$0	$0	$1,173	$134	$53	$0	$1,360	$2
9.6	Component Cooling Water Sys	$475	$0	$358	$0	$0	$833	$94	$37	$0	$965	$2
9.9	Circ.Water System Foundations& Structures	$0	$2,771	$4,164	$0	$0	$6,935	$780	$312	$0	$8,027	$13
	SUBTOTAL 9.	**$6,061**	**$7,442**	**$11,359**	**$0**	**$0**	**$24,862**	**$2,786**	**$1,119**	**$0**	**$28,767**	**$45**

	Client:	Alstom								Report Date:	02-Jul-07	
	Project:	SC CFB Oxyfuel Capture Ready										
		TOTAL PLANT COST SUMMARY										
	Case:	Case 1a - Air Blown										
	Plant Size:	635.7	MW,net	Estimate Type:		Conceptual		Cost Base (May)		2007	($x1000)	
Acct		Equipment	Material	Labor		Sales	Bare Erected	Eng'g CM	Other	Contingency	TOTAL PLANT COST	
No.	Item/Description	Cost	Cost	Direct	Indirect	Tax	Cost $	H.O.& Fee	Costs	Project	$	$/kW
10	ASH/SPENT SORBENT HANDLING SYS											
10.1	Ash Coolers	N/A	$0	N/A	$0	$0	$0	$0	$0	$0	$0	$0
10.2	Cyclone Ash Letdown	N/A	$0	N/A	$0	$0	$0	$0	$0	$0	$0	$0
10.3	HGCU Ash Letdown	N/A	$0	N/A	$0	$0	$0	$0	$0	$0	$0	$0
10.4	High Temperature Ash Piping	N/A	$0	N/A	$0	$0	$0	$0	$0	$0	$0	$0
10.5	Other Ash Recovery Equipment	N/A	$0	N/A	$0	$0	$0	$0	$0	$0	$0	$0
10.6	Ash Storage Silos	$563	$0	$1,642	$0	$0	$2,204	$258	$99	$0	$2,561	$4
10.7	Ash Transport & Feed Equipment	$8,641	$0	$4,192	$0	$0	$12,833	$1,443	$577	$0	$14,853	$23
10.8	Misc. Ash Handling Equipment	$0	$0	$0	$0	$0	$0	$0	$0	$0	$0	$0
10.9	Ash/Spent Sorbent Foundation	$0	$536	$596	$0	$0	$1,132	$126	$51	$0	$1,309	$2
	SUBTOTAL 10.	**$9,204**	**$536**	**$6,430**	**$0**	**$0**	**$16,169**	**$1,827**	**$728**	**$0**	**$18,723**	**$29**
11	ACCESSORY ELECTRIC PLANT											
11.1	Generator Equipment	$1,731	$0	$266	$0	$0	$1,997	$221	$90	$0	$2,307	$4
11.2	Station Service Equipment	$2,767	$0	$861	$0	$0	$3,628	$404	$163	$0	$4,196	$7
11.3	Switchgear & Motor Control	$3,095	$0	$498	$0	$0	$3,593	$397	$162	$0	$4,151	$7
11.4	Conduit & Cable Tray	$0	$1,365	$4,470	$0	$0	$5,834	$672	$263	$0	$6,769	$11
11.5	Wire & Cable	$0	$2,527	$4,628	$0	$0	$7,155	$714	$322	$0	$8,191	$13
11.6	Protective Equipment	$199	$0	$641	$0	$0	$841	$98	$38	$0	$976	$2
11.7	Standby Equipment	$1,358	$0	$29	$0	$0	$1,387	$152	$62	$0	$1,601	$3
11.8	Main Power Transformers	$3,461	$0	$128	$0	$0	$3,589	$326	$161	$0	$4,077	$6
11.9	Electrical Foundations	$0	$343	$796	$0	$0	$1,139	$129	$51	$0	$1,319	$2
	SUBTOTAL 11.	**$12,611**	**$4,235**	**$12,316**	**$0**	**$0**	**$29,162**	**$3,113**	**$1,312**	**$0**	**$33,588**	**$53**
12	INSTRUMENTATION & CONTROL											
12.1	PC Control Equipment	w/12.7	$0	w/12.7	$0	$0	$0	$0	$0	$0	$0	$0
12.2	Combustion Turbine Control	N/A	$0	N/A	$0	$0	$0	$0	$0	$0	$0	$0
12.3	Steam Turbine Control	w/8.1	$0	w/8.1	$0	$0	$0	$0	$0	$0	$0	$0
12.4	Other Major Component Control	$0	$0	$0	$0	$0	$0	$0	$0	$0	$0	$0
12.5	Signal Processing Equipment	W/12.7	$0	w/12.7	$0	$0	$0	$0	$0	$0	$0	$0
12.6	Control Boards,Panels & Racks	$466	$0	$264	$0	$0	$730	$82	$33	$0	$845	$1
12.7	Distributed Control System Equipment	$5,171	$0	$856	$0	$0	$6,027	$666	$271	$0	$6,964	$11
12.8	Instrument Wiring & Tubing	$3,555	$0	$6,686	$0	$0	$10,241	$1,034	$461	$0	$11,736	$18
12.9	Other I & C Equipment	$1,328	$0	$2,855	$0	$0	$4,183	$483	$188	$0	$4,854	$8
	SUBTOTAL 12.	**$10,519**	**$0**	**$10,661**	**$0**	**$0**	**$21,180**	**$2,265**	**$953**	**$0**	**$24,399**	**$38**
13	IMPROVEMENTS TO SITE											
13.1	Site Preparation	$0	$53	$1,005	$0	$0	$1,058	$125	$48	$0	$1,231	$2
13.2	Site Improvements	$0	$1,762	$2,072	$0	$0	$3,834	$451	$173	$0	$4,457	$7
13.3	Site Facilities	$3,157	$0	$2,948	$0	$0	$6,105	$717	$275	$0	$7,097	$11
	SUBTOTAL 13.	**$3,157**	**$1,815**	**$6,025**	**$0**	**$0**	**$10,997**	**$1,293**	**$495**	**$0**	**$12,785**	**$20**
14	BUILDINGS & STRUCTURES											
14.1	FB Boiler Building Foundation	$0	$14,329	$11,929	$0	$0	$26,258	$2,806	$1,182	$0	$30,245	$48
14.2	Turbine Building	$0	$9,596	$8,467	$0	$0	$18,063	$1,936	$813	$0	$20,811	$33
14.3	Administration Building	$0	$954	$954	$0	$0	$1,908	$206	$86	$0	$2,200	$3
14.4	Circulation Water Pumphouse	$0	$205	$154	$0	$0	$359	$38	$16	$0	$413	$1
14.5	Water Treatment Buildings	$0	$664	$517	$0	$0	$1,181	$126	$53	$0	$1,360	$2
14.6	Machine Shop	$0	$850	$541	$0	$0	$1,391	$147	$63	$0	$1,600	$3
14.7	Warehouse	$0	$576	$547	$0	$0	$1,123	$121	$51	$0	$1,295	$2
14.8	Other Buildings & Structures	$0	$353	$285	$0	$0	$638	$68	$29	$0	$734	$1
14.9	Waste Treating Building & Str.	$0	$676	$1,942	$0	$0	$2,619	$296	$118	$0	$3,032	$5
	SUBTOTAL 14.	**$0**	**$28,203**	**$25,337**	**$0**	**$0**	**$53,540**	**$5,742**	**$2,409**	**$0**	**$61,691**	**$97**
	TOTAL COST	**$165,060**	**$48,860**	**$131,312**	**$0**	**$0**	**$345,232**	**$37,389**	**$15,535**	**$0**	**$398,156**	**$626**

Table 10-2: BOP Costs for Case 1b (Base Case Power Plant Retrofit to O_2 Firing and CO_2 Capture)

TOTAL PLANT COST SUMMARY

Client: DOE - NETL
Project: CO2 Capture Ready Supercritical CFB Power Plants

Case: Case-1b: Base Case CFB Plant Converted to O2 Firing and CO2 Capture
Plant Size: 475,186 KWe,net 2 CFB's & 1 Steam Turbine

Report D
Estimate Ty
Cost B

Acct No.	Item/Description	Equipment Cost	Material Cost	Labor Direct	Labor Indirect	Sales Tax	Bare Erected Cost $	Eng'g CM H.O.& Fee	Other Costs	Contingencies Process	Contingencies Proje
1	COAL & SORBENT HANDLING	22,883	4,793	10,939	0	0	38,615	4,100	1,736	0	
2	COAL & SORBENT PREP & FEED	11,403	458	2,759	0	0	14,620	1,529	658	0	
3	FEEDWATER & MISC. BOP SYSTEMS	47,794	0	21,780	0	0	69,574	7,576	3,117	0	
4	CFB BOILER & ACCESSORIES										
4a	Air Separation Unit										
5	FLUE GAS CLEANUP	1,313	0	1,331	0	0	2,643	305	119		
5a	CO2 Processing System (Purif, Compr, Liquef)										
5b	Flash Drier Absorber (FDA)										
6	COMBUSTION TURBINE/ACCESSORIES	n/a	n/a	n/a	n/a		n/a	n/a		n/a	
7	HRSG, DUCTING & STACK	19,003	171	11,101	0	0	30,274	3,347	1,362	0	
8	STEAM TURBINE GENERATOR									0	
8.2-8.9	Turbine Plant Auxiliaries and Steam Piping	26,885	1,207	14,075	0	0	42,167	4,410	1,896		
9	COOLING WATER SYSTEM	6,435	7,900	12,059	0	0	26,395	2,958	1,188	0	
10	ASH/SPENT SORBENT HANDLING SYS	9,204	536	6,430	0	0	16,169	1,827	728	0	
11	ACCESSORY ELECTRIC PLANT	18,328	7,433	22,720	0	0	48,481	5,054	2,121	0	
12	INSTRUMENTATION & CONTROL	12,552	0	13,030	0	0	25,582	2,703	1,137	0	
13	IMPROVEMENTS TO SITE	3,729	2,144	7,282	0	0	13,155	1,528	585	0	
14	BUILDINGS & STRUCTURES	0	29,601	26,782	0	0	56,384	6,027	2,529	0	
	TOTAL COST	**$179,528**	**$54,243**	**$150,288**	**$0**		**$384,059**	**$41,362**		**$0**	

Table 10-3: Detailed BOP Costs for Case 2a (Capture Ready Power Plant)

	Client:	Alstom								Report Date:	02-Jul-07	
	Project:	SC CFB Oxyfuel Capture Ready										
	TOTAL PLANT COST SUMMARY											
	Case:	Case 2a - Air Blown Capture Ready										
	Plant Size:	636.2	MW,net	Estimate Type:		Conceptual		Cost Base (May)		2007	($x1000)	
Acct		Equipment	Material	Labor		Sales	Bare Erected	Eng'g CM	Other	Contingency	TOTAL PLANT COST	
No.	Item/Description	Cost	Cost	Direct	Indirect	Tax	Cost $	H.O.& Fee	Costs	Project	$	$/kW
1	COAL & SORBENT HANDLING	$20,203	$4,793	$10,616	$0	$0	**$35,612**	$3,795	$1,603	$0	**$41,010**	**$64**
2	COAL & SORBENT PREP & FEED	$11,403	$458	$2,759	$0	$0	**$14,620**	$1,529	$658	$0	**$16,807**	**$26**
3	FEEDWATER & MISC. BOP SYSTEMS	$52,792	$0	$22,293	$0	$0	**$75,085**	$8,162	$3,379	$0	**$86,626**	**$136**
4	FLUIDIZED BED BOILER											
4.1	Fluidized Bed Boiler,w/o BHse & Accessories	$0	$0	$0	$0	$0	**$0**	$0	$0	$0	**$0**	**$0**
4.2	Air Separation Unit	$0	$0	$0	$0	$0	**$0**	$0	$0	$0	**$0**	**$0**
4.3	Open	$0	$0	$0	$0	$0	**$0**	$0	$0	$0	**$0**	**$0**
4.4-4.9	Boiler BOP	$0	$0	$0	$0	$0	**$0**	$0	$0	$0	**$0**	**$0**
	SUBTOTAL 4	**$0**	**$0**	**$0**	**$0**	**$0**	**$0**	**$0**	**$0**	**$0**	**$0**	**$0**
5	FLUE GAS CLEANUP	$1,313	$0	$1,331	$0	$0	**$2,643**	$305	$119	$0	**$3,068**	**$5**
5B	CO2 REMOVAL & COMPRESSION	$0	$0	$0	$0	$0	**$0**	$0	$0	$0	**$0**	**$0**
6	COMBUSTION TURBINE/ACCESSORIES											
6.1	Combustion Turbine Generator	N/A	$0	N/A	$0	$0	**$0**	$0	$0	$0	**$0**	**$0**
6.2-6.9	Combustion Turbine Accessories	$0	$0	$0	$0	$0	**$0**	$0	$0	$0	**$0**	**$0**
	SUBTOTAL 6	**$0**	**$0**	**$0**	**$0**	**$0**	**$0**	**$0**	**$0**	**$0**	**$0**	**$0**
7	HRSG, DUCTING & STACK											
7.1	Heat Recovery Steam Generator	N/A	$0	N/A	$0	$0	**$0**	$0	$0	$0	**$0**	**$0**
7.2-7.9	HRSG Accessories, Ductwork and Stack	$19,003	$171	$11,101	$0	$0	**$30,274**	$3,347	$1,362	$0	**$34,983**	**$55**
	SUBTOTAL 7	**$19,003**	**$171**	**$11,101**	**$0**	**$0**	**$30,274**	**$3,347**	**$1,362**	**$0**	**$34,983**	**$55**
8	STEAM TURBINE GENERATOR											
8.1	Steam TG & Accessories	$0	$0	$0	$0	$0	**$0**	$0	$0	$0	**$0**	**$0**
8.2-8.9	Turbine Plant Auxiliaries and Steam Piping	$33,449	$1,447	$16,690	$0	$0	**$51,586**	$5,397	$2,321	$0	**$59,304**	**$93**
	SUBTOTAL 8	**$33,449**	**$1,447**	**$16,690**	**$0**	**$0**	**$51,586**	**$5,397**	**$2,321**	**$0**	**$59,304**	**$93**
9	COOLING WATER SYSTEM	$6,061	$8,328	$12,173	$0	$0	**$26,561**	$2,975	$1,195	$0	**$30,732**	**$48**
10	ASH/SPENT SORBENT HANDLING SYS	$9,204	$536	$6,430	$0	$0	**$16,169**	$1,827	$728	$0	**$18,723**	**$29**
11	ACCESSORY ELECTRIC PLANT	$12,611	$4,235	$12,316	$0	$0	**$29,162**	$3,113	$1,312	$0	**$33,588**	**$53**
12	INSTRUMENTATION & CONTROL	$10,519	$0	$10,661	$0	$0	**$21,180**	$2,265	$953	$0	**$24,399**	**$38**
13	IMPROVEMENTS TO SITE	$3,157	$1,815	$6,025	$0	$0	**$10,997**	$1,293	$495	$0	**$12,785**	**$20**
14	BUILDINGS & STRUCTURES	$0	$31,730	$28,346	$0	$0	**$60,076**	$6,441	$2,703	$0	**$69,221**	**$109**
	TOTAL COST	**$179,714**	**$53,513**	**$140,740**	**$0**	**$0**	**$373,967**	**$40,449**	**$16,829**	**$0**	**$431,245**	**$678**

	Client:	Alstom								Report Date:	02-Jul-07	
	Project:	SC CFB Oxyfuel Capture Ready										
	TOTAL PLANT COST SUMMARY											
	Case:	Case 2a - Air Blown Capture Ready										
	Plant Size:	636.2	MW,net	Estimate Type:		Conceptual		Cost Base (May)		2007	($x1000)	
Acct		Equipment	Material	Labor		Sales	Bare Erected	Eng'g CM	Other	Contingency	TOTAL PLANT COST	
No.	Item/Description	Cost	Cost	Direct	Indirect	Tax	Cost $	H.O.& Fee	Costs	Project	$	$/kW
1	COAL & SORBENT HANDLING											
1.1	Coal Receive & Unload	$3,817	$0	$1,651	$0	$0	$5,468	$582	$246	$0	$6,296	$10
1.2	Coal Stackout & Reclaim	$4,933	$0	$1,164	$0	$0	$6,097	$637	$274	$0	$7,009	$11
1.3	Coal Conveyors	$4,586	$0	$1,047	$0	$0	$5,633	$588	$254	$0	$6,475	$10
1.4	Other Coal Handling	$1,200	$0	$242	$0	$0	$1,442	$150	$65	$0	$1,657	$3
1.5	Sorbent Receive & Unload	$215	$0	$61	$0	$0	$276	$29	$12	$0	$317	$0
1.6	Sorbent Stackout & Reclaim	$3,468	$0	$602	$0	$0	$4,070	$422	$183	$0	$4,675	$7
1.7	Sorbent Conveyors	$1,237	$268	$287	$0	$0	$1,793	$185	$81	$0	$2,058	$3
1.8	Other Sorbent Handling	$747	$175	$371	$0	$0	$1,294	$136	$58	$0	$1,488	$2
1.9	Coal & Sorbent Hnd.Foundations	$0	$4,350	$5,189	$0	$0	$9,540	$1,065	$429	$0	$11,034	$17
	SUBTOTAL 1.	**$20,203**	**$4,793**	**$10,616**	**$0**	**$0**	**$35,612**	**$3,795**	**$1,603**	**$0**	**$41,010**	**$64**
2	COAL & SORBENT PREP & FEED											
2.1	Coal Crushing & Drying	$2,206	$0	$407	$0	$0	$2,613	$272	$118	$0	$3,002	$5
2.2	Coal Conveyor to Storage	$7,059	$0	$1,459	$0	$0	$8,518	$887	$383	$0	$9,789	$15
2.3	Coal Injection System	$0	$0	$0	$0	$0	$0	$0	$0	$0	$0	$0
2.4	Misc.Coal Prep & Feed	$0	$0	$0	$0	$0	$0	$0	$0	$0	$0	$0
2.5	Sorbent Prep Equipment	$1,427	$0	$281	$0	$0	$1,707	$178	$77	$0	$1,962	$3
2.6	Sorbent Storage & Feed	$712	$0	$257	$0	$0	$969	$102	$44	$0	$1,115	$2
2.7	Sorbent Injection System	$0	$0	$0	$0	$0	$0	$0	$0	$0	$0	$0
2.8	Booster Air Supply System	$0	$0	$0	$0	$0	$0	$0	$0	$0	$0	$0
2.9	Coal & Sorbent Feed Foundation	$0	$458	$355	$0	$0	$813	$90	$37	$0	$939	$1
	SUBTOTAL 2.	**$11,403**	**$458**	**$2,759**	**$0**	**$0**	**$14,620**	**$1,529**	**$658**	**$0**	**$16,807**	**$26**
3	FEEDWATER & MISC. BOP SYSTEMS											
3.1	FeedwaterSystem	$20,934	$0	$7,061	$0	$0	$27,995	$2,925	$1,260	$0	$32,180	$51
3.2	Water Makeup & Pretreating	$7,512	$0	$2,290	$0	$0	$9,802	$1,105	$441	$0	$11,349	$18
3.3	Other Feedwater Subsystems	$11,704	$0	$4,686	$0	$0	$16,389	$1,749	$738	$0	$18,876	$30
3.4	Service Water Systems	$875	$0	$451	$0	$0	$1,326	$149	$60	$0	$1,535	$2
3.5	Other Boiler Plant Systems	$5,173	$0	$4,512	$0	$0	$9,684	$1,094	$436	$0	$11,214	$18
3.6	FO Supply Sys & Nat Gas	$276	$0	$327	$0	$0	$603	$68	$27	$0	$698	$1
3.7	Waste Treatment Equipment	$3,027	$0	$1,634	$0	$0	$4,662	$541	$210	$0	$5,413	$9
3.8	Misc. Equip.(cranes,AirComp.,Comm.)	$3,291	$0	$1,331	$0	$0	$4,622	$532	$208	$0	$5,362	$8
	SUBTOTAL 3.	**$52,792**	**$0**	**$22,293**	**$0**	**$0**	**$75,085**	**$8,162**	**$3,379**	**$0**	**$86,626**	**$136**
4	FLUIDIZED BED BOILER											
4.1	Fluidized Bed Boiler,w/o BHse & Accessories	$0	$0	$0	$0	$0	$0	$0	$0	$0	$0	$0
4.2	Air Separation Unit	$0	$0	$0	$0	$0	$0	$0	$0	$0	$0	$0
4.3	Open	$0	$0	$0	$0	$0	$0	$0	$0	$0	$0	$0
4.4	Boiler BoP (Fluidizing Air Fans)	$0	$0	$0	$0	$0	$0	$0	$0	$0	$0	$0
4.5	Primary Air System (Fans)	w/4.1	$0	w/4.1	$0	$0	$0	$0	$0	$0	$0	$0
4.6	Secondary Air System (Fans)	w/4.1	$0	w/4.1	$0	$0	$0	$0	$0	$0	$0	$0
4.8	Major Component Rigging	$0	w/4.1	w/4.1	$0	$0	$0	$0	$0	$0	$0	$0
4.9	Boiler Foundations	$0	w/14.1	w/14.1	$0	$0	$0	$0	$0	$0	$0	$0
	SUBTOTAL 4.	**$0**	**$0**	**$0**	**$0**	**$0**	**$0**	**$0**	**$0**	**$0**	**$0**	**$0**

	Client:	Alstom								Report Date:	02-Jul-07	
	Project:	SC CFB Oxyfuel Capture Ready										
	TOTAL PLANT COST SUMMARY											
	Case:	Case 2a - Air Blown Capture Ready										
	Plant Size:	636.2	MW,net	Estimate Type:		Conceptual		Cost Base (May)		2007	($x1000)	
Acct		Equipment	Material	Labor		Sales	Bare Erected	Eng'g CM	Other	Contingency	TOTAL PLANT COST	
No.	Item/Description	Cost	Cost	Direct	Indirect	Tax	Cost $	H.O.& Fee	Costs	Project	$	$/kW
5	FLUE GAS CLEANUP											
5.1	Absorber Vessels & Accessories	$0	$0	$0	$0	$0	$0	$0	$0	$0	$0	$0
5.2	Other FGD	$0	$0	$0	$0	$0	$0	$0	$0	$0	$0	$0
5.3	Bag House & Accessories	$0	$0	$0	$0	$0	$0	$0	$0	$0	$0	$0
5.4	Other Particulate Removal Materials	$1,313	$0	$1,331	$0	$0	$2,643	$305	$119	$0	$3,068	$5
5.5	PFWH & Gas Cooler	$0	$0	$0	$0	$0	$0	$0	$0	$0	$0	$0
5.6	Gas Processing System	$0	$0	$0	$0	$0	$0	$0	$0	$0	$0	$0
5.9	Open	$0	$0	$0	$0	$0	$0	$0	$0	$0	$0	$0
	SUBTOTAL 5.	**$1,313**	**$0**	**$1,331**	**$0**	**$0**	**$2,643**	**$305**	**$119**	**$0**	**$3,068**	**$5**
5B	CO2 REMOVAL & COMPRESSION											
5B.1	CO2 Removal System	$0	$0	$0	$0	$0	$0	$0	$0	$0	$0	$0
5B.2	CO2 Compression & Drying	$0	$0	$0	$0	$0	$0	$0	$0	$0	$0	$0
	SUBTOTAL 5B.	**$0**	**$0**	**$0**	**$0**	**$0**	**$0**	**$0**	**$0**	**$0**	**$0**	**$0**
6	COMBUSTION TURBINE/ACCESSORIES											
6.1	Combustion Turbine Generator	N/A	$0	N/A	$0	$0	$0	$0	$0	$0	$0	$0
6.2	Combustion Turbine Accessories	$0	$0	$0	$0	$0	$0	$0	$0	$0	$0	$0
6.3	Compressed Air Piping	$0	$0	$0	$0	$0	$0	$0	$0	$0	$0	$0
6.9	Combustion Turbine Foundations	$0	$0	$0	$0	$0	$0	$0	$0	$0	$0	$0
	SUBTOTAL 6.	**$0**	**$0**	**$0**	**$0**	**$0**	**$0**	**$0**	**$0**	**$0**	**$0**	**$0**
7	HRSG, DUCTING & STACK											
7.1	Heat Recovery Steam Generator	N/A	$0	N/A	$0	$0	$0	$0	$0	$0	$0	$0
7.2	ID Fans	$0	$0	$0	$0	$0	$0	$0	$0	$0	$0	$0
7.3	Ductwork	$7,103	$0	$4,322	$0	$0	$11,425	$1,185	$514	$0	$13,123	$21
7.4	Stack	$11,900	$0	$6,595	$0	$0	$18,495	$2,123	$832	$0	$21,450	$34
7.9	Duct & Stack Foundations	$0	$171	$184	$0	$0	$355	$39	$16	$0	$410	$1
	SUBTOTAL 7.	**$19,003**	**$171**	**$11,101**	**$0**	**$0**	**$30,274**	**$3,347**	**$1,362**	**$0**	**$34,983**	**$55**
8	STEAM TURBINE GENERATOR											
8.1	Steam TG & Accessories	$0	$0	$0	$0	$0	$0	$0	$0	$0	$0	$0
8.2	Turbine Plant Auxiliaries	$384	$0	$779	$0	$0	$1,163	$135	$52	$0	$1,351	$2
8.3	Condenser & Auxiliaries	$9,774	$0	$2,873	$0	$0	$12,647	$1,442	$569	$0	$14,659	$23
8.4	Steam Piping	$23,291	$0	$10,877	$0	$0	$34,168	$3,413	$1,538	$0	$39,119	$61
8.9	TG Foundations	$0	$1,447	$2,161	$0	$0	$3,608	$406	$162	$0	$4,176	$7
	SUBTOTAL 8.	**$33,449**	**$1,447**	**$16,690**	**$0**	**$0**	**$51,586**	**$5,397**	**$2,321**	**$0**	**$59,304**	**$93**
9	COOLING WATER SYSTEM											
9.1	Cooling Towers	$3,216	$0	$1,636	$0	$0	$4,852	$556	$218	$0	$5,627	$9
9.2	Circulating Water Pumps	$1,263	$0	$185	$0	$0	$1,448	$148	$65	$0	$1,661	$3
9.3	Circ.Water System Auxiliaries	$589	$0	$74	$0	$0	$663	$75	$30	$0	$769	$1
9.4	Circ.Water Piping	$0	$5,556	$5,100	$0	$0	$10,656	$1,187	$480	$0	$12,324	$19
9.5	Make-up Water System	$518	$0	$655	$0	$0	$1,173	$134	$53	$0	$1,360	$2
9.6	Component Cooling Water Sys	$475	$0	$358	$0	$0	$833	$94	$37	$0	$965	$2
9.9	Circ.Water System Foundations& Structures	$0	$2,771	$4,164	$0	$0	$6,935	$780	$312	$0	$8,027	$13
	SUBTOTAL 9.	**$6,061**	**$8,328**	**$12,173**	**$0**	**$0**	**$26,561**	**$2,975**	**$1,195**	**$0**	**$30,732**	**$48**

	Client:	Alstom								Report Date:	02-Jul-07	
	Project:	SC CFB Oxyfuel Capture Ready										
		TOTAL PLANT COST SUMMARY										
	Case:	Case 2a - Air Blown Capture Ready										
	Plant Size:	636.2	MW,net	Estimate Type:		Conceptual		Cost Base (May)		2007	($x1000)	
Acct		Equipment	Material	Labor		Sales	Bare Erected	Eng'g CM	Other	Contingency	TOTAL PLANT COST	
No.	Item/Description	Cost	Cost	Direct	Indirect	Tax	Cost $	H.O.& Fee	Costs	Project	$	$/kW
10	ASH/SPENT SORBENT HANDLING SYS											
10.1	Ash Coolers	N/A	$0	N/A	$0	$0	$0	$0	$0	$0	$0	$0
10.2	Cyclone Ash Letdown	N/A	$0	N/A	$0	$0	$0	$0	$0	$0	$0	$0
10.3	HGCU Ash Letdown	N/A	$0	N/A	$0	$0	$0	$0	$0	$0	$0	$0
10.4	High Temperature Ash Piping	N/A	$0	N/A	$0	$0	$0	$0	$0	$0	$0	$0
10.5	Other Ash Recovery Equipment	N/A	$0	N/A	$0	$0	$0	$0	$0	$0	$0	$0
10.6	Ash Storage Silos	$563	$0	$1,642	$0	$0	$2,204	$258	$99	$0	$2,561	$4
10.7	Ash Transport & Feed Equipment	$8,641	$0	$4,192	$0	$0	$12,833	$1,443	$577	$0	$14,853	$23
10.8	Misc. Ash Handling Equipment	$0	$0	$0	$0	$0	$0	$0	$0	$0	$0	$0
10.9	Ash/Spent Sorbent Foundation	$0	$536	$596	$0	$0	$1,132	$126	$51	$0	$1,309	$2
	SUBTOTAL 10.	**$9,204**	**$536**	**$6,430**	**$0**	**$0**	**$16,169**	**$1,827**	**$728**	**$0**	**$18,723**	**$29**
11	ACCESSORY ELECTRIC PLANT											
11.1	Generator Equipment	$1,731	$0	$266	$0	$0	$1,997	$221	$90	$0	$2,307	$4
11.2	Station Service Equipment	$2,767	$0	$861	$0	$0	$3,628	$404	$163	$0	$4,196	$7
11.3	Switchgear & Motor Control	$3,095	$0	$498	$0	$0	$3,593	$397	$162	$0	$4,151	$7
11.4	Conduit & Cable Tray	$0	$1,365	$4,470	$0	$0	$5,834	$672	$263	$0	$6,769	$11
11.5	Wire & Cable	$0	$2,527	$4,628	$0	$0	$7,155	$714	$322	$0	$8,191	$13
11.6	Protective Equipment	$199	$0	$641	$0	$0	$841	$98	$38	$0	$976	$2
11.7	Standby Equipment	$1,358	$0	$29	$0	$0	$1,387	$152	$62	$0	$1,601	$3
11.8	Main Power Transformers	$3,461	$0	$128	$0	$0	$3,589	$326	$161	$0	$4,077	$6
11.9	Electrical Foundations	$0	$343	$796	$0	$0	$1,139	$129	$51	$0	$1,319	$2
	SUBTOTAL 11.	**$12,611**	**$4,235**	**$12,316**	**$0**	**$0**	**$29,162**	**$3,113**	**$1,312**	**$0**	**$33,588**	**$53**
12	INSTRUMENTATION & CONTROL											
12.1	PC Control Equipment	w/12.7	$0	w/12.7	$0	$0	$0	$0	$0	$0	$0	$0
12.2	Combustion Turbine Control	N/A	$0	N/A	$0	$0	$0	$0	$0	$0	$0	$0
12.3	Steam Turbine Control	w/8.1	$0	w/8.1	$0	$0	$0	$0	$0	$0	$0	$0
12.4	Other Major Component Control	$0	$0	$0	$0	$0	$0	$0	$0	$0	$0	$0
12.5	Signal Processing Equipment	W/12.7	$0	w/12.7	$0	$0	$0	$0	$0	$0	$0	$0
12.6	Control Boards,Panels & Racks	$466	$0	$264	$0	$0	$730	$82	$33	$0	$845	$1
12.7	Distributed Control System Equipment	$5,171	$0	$856	$0	$0	$6,027	$666	$271	$0	$6,964	$11
12.8	Instrument Wiring & Tubing	$3,555	$0	$6,686	$0	$0	$10,241	$1,034	$461	$0	$11,736	$18
12.9	Other I & C Equipment	$1,328	$0	$2,855	$0	$0	$4,183	$483	$188	$0	$4,854	$8
	SUBTOTAL 12.	**$10,519**	**$0**	**$10,661**	**$0**	**$0**	**$21,180**	**$2,265**	**$953**	**$0**	**$24,399**	**$38**
13	IMPROVEMENTS TO SITE											
13.1	Site Preparation	$0	$53	$1,005	$0	$0	$1,058	$125	$48	$0	$1,231	$2
13.2	Site Improvements	$0	$1,762	$2,072	$0	$0	$3,834	$451	$173	$0	$4,457	$7
13.3	Site Facilities	$3,157	$0	$2,948	$0	$0	$6,105	$717	$275	$0	$7,097	$11
	SUBTOTAL 13.	**$3,157**	**$1,815**	**$6,025**	**$0**	**$0**	**$10,997**	**$1,293**	**$495**	**$0**	**$12,785**	**$20**
14	BUILDINGS & STRUCTURES											
14.1	FB Boiler Building Foundation	$0	$16,241	$13,521	$0	$0	$29,762	$3,180	$1,339	$0	$34,282	$54
14.2	Turbine Building	$0	$11,137	$9,826	$0	$0	$20,963	$2,246	$943	$0	$24,153	$38
14.3	Administration Building	$0	$954	$954	$0	$0	$1,908	$206	$86	$0	$2,200	$3
14.4	Circulation Water Pumphouse	$0	$222	$167	$0	$0	$390	$41	$18	$0	$449	$1
14.5	Water Treatment Buildings	$0	$720	$562	$0	$0	$1,282	$137	$58	$0	$1,476	$2
14.6	Machine Shop	$0	$850	$541	$0	$0	$1,391	$147	$63	$0	$1,600	$3
14.7	Warehouse	$0	$576	$547	$0	$0	$1,123	$121	$51	$0	$1,295	$2
14.8	Other Buildings & Structures	$0	$353	$285	$0	$0	$638	$68	$29	$0	$734	$1
14.9	Waste Treating Building & Str.	$0	$676	$1,942	$0	$0	$2,619	$296	$118	$0	$3,032	$5
	SUBTOTAL 14.	**$0**	**$31,730**	**$28,346**	**$0**	**$0**	**$60,076**	**$6,441**	**$2,703**	**$0**	**$69,221**	$109
	TOTAL COST	**$179,714**	**$53,513**	**$140,740**	**$0**	**$0**	**$373,967**	**$40,449**	**$16,829**	**$0**	**$431,245**	**$678**

Table 10-4: Detailed BOP Costs for Case 2b (Capture Ready Power Plant Retrofit to O_2 Firing and CO_2 Capture)

	Client:	Alstom								Report Date:	02-Jul-07	
	Project:	SC CFB Oxyfuel Capture Ready										
	TOTAL PLANT COST SUMMARY											
	Case:	Case 2b - Oxygen Blown w/CO2 Capture										
	Plant Size:	620.5	MW,net	Estimate Type:		Conceptual		Cost Base (May)		2007	($x1000)	
Acct		Equipment	Material	Labor		Sales	Bare Erected	Eng'g CM	Other	Contingency	TOTAL PLANT COST	
No.	Item/Description	Cost	Cost	Direct	Indirect	Tax	Cost $	H.O.& Fee	Costs	Project	$	$/kW
1	COAL & SORBENT HANDLING	$22,883	$4,793	$10,939	$0	$0	**$38,615**	$4,100	$1,736	$0	**$44,451**	**$72**
2	COAL & SORBENT PREP & FEED	$11,403	$458	$2,759	$0	$0	**$14,620**	$1,529	$658	$0	**$16,807**	**$27**
3	FEEDWATER & MISC. BOP SYSTEMS	$55,808	$0	$24,592	$0	$0	**$80,400**	$8,734	$3,604	$0	**$92,738**	**$149**
4	FLUIDIZED BED BOILER											
4.1	Fluidized Bed Boiler,w/o BHse & Accessories	$0	$0	$0	$0	$0	**$0**	$0	$0	$0	**$0**	**$0**
4.2	Air Separation Unit	$0	$0	$0	$0	$0	**$0**	$0	$0	$0	**$0**	**$0**
4.3	Open	$0	$0	$0	$0	$0	**$0**	$0	$0	$0	**$0**	**$0**
4.4-4.9	Boiler BOP	$0	$0	$0	$0	$0	**$0**	$0	$0	$0	**$0**	**$0**
	SUBTOTAL 4	**$0**	**$0**	**$0**	**$0**	**$0**	**$0**	**$0**	**$0**	**$0**	**$0**	**$0**
5	FLUE GAS CLEANUP	$1,313	$0	$1,331	$0	$0	**$2,643**	$305	$119	$0	**$3,068**	**$5**
5B	CO2 REMOVAL & COMPRESSION	$0	$0	$0	$0	$0	**$0**	$0	$0	$0	**$0**	**$0**
6	COMBUSTION TURBINE/ACCESSORIES											
6.1	Combustion Turbine Generator	N/A	$0	N/A	$0	$0	**$0**	$0	$0	$0	**$0**	**$0**
6.2-6.9	Combustion Turbine Accessories	$0	$0	$0	$0	$0	**$0**	$0	$0	$0	**$0**	**$0**
	SUBTOTAL 6	**$0**	**$0**	**$0**	**$0**	**$0**	**$0**	**$0**	**$0**	**$0**	**$0**	**$0**
7	HRSG, DUCTING & STACK											
7.1	Heat Recovery Steam Generator	N/A	$0	N/A	$0	$0	**$0**	$0	$0	$0	**$0**	**$0**
7.2-7.9	HRSG Accessories, Ductwork and Stack	$20,944	$218	$12,517	$0	$0	**$33,678**	$3,681	$1,507	$0	**$38,866**	**$63**
	SUBTOTAL 7	**$20,944**	**$218**	**$12,517**	**$0**	**$0**	**$33,678**	**$3,681**	**$1,507**	**$0**	**$38,866**	**$63**
8	STEAM TURBINE GENERATOR											
8.1	Steam TG & Accessories	$0	$0	$0	$0	$0	**$0**	$0	$0	$0	**$0**	**$0**
8.2-8.9	Turbine Plant Auxiliaries and Steam Piping	$33,525	$1,447	$16,868	$0	$0	**$51,840**	$5,424	$2,332	$0	**$59,595**	**$96**
	SUBTOTAL 8	**$33,525**	**$1,447**	**$16,868**	**$0**	**$0**	**$51,840**	**$5,424**	**$2,332**	**$0**	**$59,595**	**$96**
9	COOLING WATER SYSTEM	$8,787	$9,409	$15,063	$0	$0	**$33,259**	$3,684	$1,480	$0	**$38,422**	**$62**
10	ASH/SPENT SORBENT HANDLING SYS	$10,751	$626	$7,673	$0	$0	**$19,049**	$2,134	$850	$0	**$22,033**	**$36**
11	ACCESSORY ELECTRIC PLANT	$20,034	$8,387	$25,825	$0	$0	**$54,245**	$5,633	$2,362	$0	**$62,240**	**$100**
12	INSTRUMENTATION & CONTROL	$12,552	$0	$13,030	$0	$0	**$25,582**	$2,703	$1,137	$0	**$29,423**	**$47**
13	IMPROVEMENTS TO SITE	$3,729	$2,144	$7,282	$0	$0	**$13,155**	$1,528	$585	$0	**$15,268**	**$25**
14	BUILDINGS & STRUCTURES	$0	$33,129	$29,791	$0	$0	**$62,920**	$6,726	$2,823	$0	**$72,469**	**$117**
	TOTAL COST	**$201,728**	**$60,610**	**$167,669**	**$0**	**$0**	**$430,007**	**$46,180**	**$19,192**	**$0**	**$495,379**	**$798**

	Client:	Alstom								Report Date:	02-Jul-07	
	Project:	SC CFB Oxyfuel Capture Ready										
		TOTAL PLANT COST SUMMARY										
	Case:	Case 2b - Oxygen Blown w/CO2 Capture										
	Plant Size:	620.5	MW,net	Estimate Type:		Conceptual			Cost Base (May)	2007	($x1000)	
Acct		Equipment	Material	Labor		Sales	Bare Erected	Eng'g CM	Other	Contingency	TOTAL PLANT COST	
No.	Item/Description	Cost	Cost	Direct	Indirect	Tax	Cost $	H.O.& Fee	Costs	Project	$	$/kW
1	COAL & SORBENT HANDLING											
1.1	Coal Receive & Unload	$3,817	$0	$1,651	$0	$0	$5,468	$582	$246	$0	$6,296	$10
1.2	Coal Stackout & Reclaim	$4,933	$0	$1,164	$0	$0	$6,097	$637	$274	$0	$7,009	$11
1.3	Coal Conveyors	$4,586	$0	$1,047	$0	$0	$5,633	$588	$254	$0	$6,475	$10
1.4	Other Coal Handling	$1,200	$0	$242	$0	$0	$1,442	$150	$65	$0	$1,657	$3
1.5	Sorbent Receive & Unload	$215	$0	$61	$0	$0	$276	$29	$12	$0	$317	$1
1.6	Sorbent Stackout & Reclaim	$3,468	$0	$602	$0	$0	$4,070	$422	$183	$0	$4,675	$8
1.7	Sorbent Conveyors	$1,237	$268	$287	$0	$0	$1,793	$185	$81	$0	$2,058	$3
1.8	Lime Handling System	$3,428	$175	$694	$0	$0	$4,297	$441	$191	$0	$4,929	$8
1.9	Coal & Sorbent Hnd.Foundations	$0	$4,350	$5,189	$0	$0	$9,540	$1,065	$429	$0	$11,034	$18
	SUBTOTAL 1.	**$22,883**	**$4,793**	**$10,939**	**$0**	**$0**	**$38,615**	**$4,100**	**$1,736**	**$0**	**$44,451**	**$72**
2	COAL & SORBENT PREP & FEED											
2.1	Coal Crushing & Drying	$2,206	$0	$407	$0	$0	$2,613	$272	$118	$0	$3,002	$5
2.2	Coal Conveyor to Storage	$7,059	$0	$1,459	$0	$0	$8,518	$887	$383	$0	$9,789	$16
2.3	Coal Injection System	$0	$0	$0	$0	$0	$0	$0	$0	$0	$0	$0
2.4	Misc.Coal Prep & Feed	$0	$0	$0	$0	$0	$0	$0	$0	$0	$0	$0
2.5	Sorbent Prep Equipment	$1,427	$0	$281	$0	$0	$1,707	$178	$77	$0	$1,962	$3
2.6	Sorbent Storage & Feed	$712	$0	$257	$0	$0	$969	$102	$44	$0	$1,115	$2
2.7	Sorbent Injection System	$0	$0	$0	$0	$0	$0	$0	$0	$0	$0	$0
2.8	Booster Air Supply System	$0	$0	$0	$0	$0	$0	$0	$0	$0	$0	$0
2.9	Coal & Sorbent Feed Foundation	$0	$458	$355	$0	$0	$813	$90	$37	$0	$939	$2
	SUBTOTAL 2.	**$11,403**	**$458**	**$2,759**	**$0**	**$0**	**$14,620**	**$1,529**	**$658**	**$0**	**$16,807**	**$27**
3	FEEDWATER & MISC. BOP SYSTEMS											
3.1	FeedwaterSystem	$20,934	$0	$7,061	$0	$0	$27,995	$2,925	$1,260	$0	$32,180	$52
3.2	Water Makeup & Pretreating	$7,512	$0	$2,290	$0	$0	$9,802	$1,105	$441	$0	$11,349	$18
3.3	Other Feedwater Subsystems	$11,704	$0	$4,686	$0	$0	$16,389	$1,749	$738	$0	$18,876	$30
3.4	Service Water Systems	$1,142	$0	$609	$0	$0	$1,751	$194	$78	$0	$2,023	$3
3.5	Other Boiler Plant Systems	$6,436	$0	$5,779	$0	$0	$12,215	$1,361	$542	$0	$14,119	$23
3.6	FO Supply Sys & Nat Gas	$320	$0	$386	$0	$0	$706	$78	$31	$0	$816	$1
3.7	Waste Treatment Equipment	$3,950	$0	$2,207	$0	$0	$6,157	$706	$274	$0	$7,137	$12
3.8	Misc. Equip.(cranes,AirComp.,Comm.)	$3,810	$0	$1,573	$0	$0	$5,383	$615	$241	$0	$6,239	$10
	SUBTOTAL 3.	**$55,808**	**$0**	**$24,592**	**$0**	**$0**	**$80,400**	**$8,734**	**$3,604**	**$0**	**$92,738**	**$149**
4	FLUIDIZED BED BOILER											
4.1	Fluidized Bed Boiler,w/o BHse & Accessories	$0	$0	$0	$0	$0	$0	$0	$0	$0	$0	$0
4.2	Air Separation Unit	$0	$0	$0	$0	$0	$0	$0	$0	$0	$0	$0
4.3	Open	$0	$0	$0	$0	$0	$0	$0	$0	$0	$0	$0
4.4	Boiler BoP (Fluidizing Air Fans)	$0	$0	$0	$0	$0	$0	$0	$0	$0	$0	$0
4.5	Primary Air System (Fans)	w/4.1	$0	w/4.1	$0	$0	$0	$0	$0	$0	$0	$0
4.6	Secondary Air System (Fans)	w/4.1	$0	w/4.1	$0	$0	$0	$0	$0	$0	$0	$0
4.8	Major Component Rigging	$0	w/4.1	w/4.1	$0	$0	$0	$0	$0	$0	$0	$0
4.9	Boiler Foundations	$0	w/14.1	w/14.1	$0	$0	$0	$0	$0	$0	$0	$0
	SUBTOTAL 4.	**$0**	**$0**	**$0**	**$0**	**$0**	**$0**	**$0**	**$0**	**$0**	**$0**	**$0**

	Client:	Alstom								Report Date:	02-Jul-07	
	Project:	SC CFB Oxyfuel Capture Ready										
		TOTAL PLANT COST SUMMARY										
	Case:	Case 2b - Oxygen Blown w/CO2 Capture										
	Plant Size:	620.5	MW,net	Estimate Type:		Conceptual			Cost Base (May)	2007	($x1000)	
Acct		Equipment	Material	Labor		Sales	Bare Erected	Eng'g CM	Other	Contingency	TOTAL PLANT COST	
No.	Item/Description	Cost	Cost	Direct	Indirect	Tax	Cost $	H.O.& Fee	Costs	Project	$	$/kW
5	FLUE GAS CLEANUP											
5.1	Absorber Vessels & Accessories	$0	$0	$0	$0	$0	$0	$0	$0	$0	$0	$0
5.2	Other FGD	$0	$0	$0	$0	$0	$0	$0	$0	$0	$0	$0
5.3	Bag House & Accessories	$0	$0	$0	$0	$0	$0	$0	$0	$0	$0	$0
5.4	Other Particulate Removal Materials	$1,313	$0	$1,331	$0	$0	$2,643	$305	$119	$0	$3,068	$5
5.5	PFWH & Gas Cooler	$0	$0	$0	$0	$0	$0	$0	$0	$0	$0	$0
5.6	Gas Processing System	$0	$0	$0	$0	$0	$0	$0	$0	$0	$0	$0
5.9	Open	$0	$0	$0	$0	$0	$0	$0	$0	$0	$0	$0
	SUBTOTAL 5.	**$1,313**	**$0**	**$1,331**	**$0**	**$0**	**$2,643**	**$305**	**$119**	**$0**	**$3,068**	**$5**
5B	CO2 REMOVAL & COMPRESSION											
5B.1	CO2 Removal System	$0	$0	$0	$0	$0	$0	$0	$0	$0	$0	$0
5B.2	CO2 Compression & Drying	$0	$0	$0	$0	$0	$0	$0	$0	$0	$0	$0
	SUBTOTAL 5B.	**$0**	**$0**	**$0**	**$0**	**$0**	**$0**	**$0**	**$0**	**$0**	**$0**	**$0**
6	COMBUSTION TURBINE/ACCESSORIES											
6.1	Combustion Turbine Generator	N/A	$0	N/A	$0	$0	$0	$0	$0	$0	$0	$0
6.2	Combustion Turbine Accessories	$0	$0	$0	$0	$0	$0	$0	$0	$0	$0	$0
6.3	Compressed Air Piping	$0	$0	$0	$0	$0	$0	$0	$0	$0	$0	$0
6.9	Combustion Turbine Foundations	$0	$0	$0	$0	$0	$0	$0	$0	$0	$0	$0
	SUBTOTAL 6.	**$0**	**$0**	**$0**	**$0**	**$0**	**$0**	**$0**	**$0**	**$0**	**$0**	**$0**
7	HRSG, DUCTING & STACK											
7.1	Heat Recovery Steam Generator	N/A	$0	N/A	$0	$0	$0	$0	$0	$0	$0	$0
7.2	ID Fans	$0	$0	$0	$0	$0	$0	$0	$0	$0	$0	$0
7.3	Ductwork	$9,044	$0	$5,680	$0	$0	$14,724	$1,508	$655	$0	$16,887	$27
7.4	Stack	$11,900	$0	$6,595	$0	$0	$18,495	$2,123	$832	$0	$21,450	$35
7.9	Duct & Stack Foundations	$0	$218	$241	$0	$0	$459	$50	$20	$0	$529	$1
	SUBTOTAL 7.	**$20,944**	**$218**	**$12,517**	**$0**	**$0**	**$33,678**	**$3,681**	**$1,507**	**$0**	**$38,866**	**$63**
8	STEAM TURBINE GENERATOR											
8.1	Steam TG & Accessories	$0	$0	$0	$0	$0	$0	$0	$0	$0	$0	$0
8.2	Turbine Plant Auxiliaries	$460	$0	$957	$0	$0	$1,417	$162	$63	$0	$1,642	$3
8.3	Condenser & Auxiliaries	$9,774	$0	$2,873	$0	$0	$12,647	$1,442	$569	$0	$14,659	$24
8.4	Steam Piping	$23,291	$0	$10,877	$0	$0	$34,168	$3,413	$1,538	$0	$39,119	$63
8.9	TG Foundations	$0	$1,447	$2,161	$0	$0	$3,608	$406	$162	$0	$4,176	$7
	SUBTOTAL 8.	**$33,525**	**$1,447**	**$16,868**	**$0**	**$0**	**$51,840**	**$5,424**	**$2,332**	**$0**	**$59,595**	**$96**
9	COOLING WATER SYSTEM											
9.1	Cooling Towers	$5,003	$0	$2,681	$0	$0	$7,684	$865	$340	$0	$8,889	$14
9.2	Circulating Water Pumps	$1,894	$0	$291	$0	$0	$2,186	$222	$98	$0	$2,505	$4
9.3	Circ.Water System Auxiliaries	$701	$0	$91	$0	$0	$791	$90	$36	$0	$917	$1
9.4	Circ.Water Piping	$0	$6,112	$5,687	$0	$0	$11,799	$1,306	$527	$0	$13,632	$22
9.5	Make-up Water System	$616	$0	$798	$0	$0	$1,415	$159	$63	$0	$1,637	$3
9.6	Component Cooling Water Sys	$572	$0	$442	$0	$0	$1,014	$113	$45	$0	$1,173	$2
9.9	Circ.Water System Foundations& Structures	$0	$3,297	$5,072	$0	$0	$8,369	$928	$371	$0	$9,669	$16
	SUBTOTAL 9.	**$8,787**	**$9,409**	**$15,063**	**$0**	**$0**	**$33,259**	**$3,684**	**$1,480**	**$0**	**$38,422**	**$62**

	Client:	Alstom								Report Date:	02-Jul-07	
	Project:	SC CFB Oxyfuel Capture Ready										
		TOTAL PLANT COST SUMMARY										
	Case:	Case 2b - Oxygen Blown w/CO2 Capture										
	Plant Size:	620.5	MW,net	Estimate Type:		Conceptual		Cost Base (May)		2007	($x1000)	
Acct		Equipment	Material	Labor		Sales	Bare Erected	Eng'g CM	Other	Contingency	TOTAL PLANT COST	
No.	Item/Description	Cost	Cost	Direct	Indirect	Tax	Cost $	H.O.& Fee	Costs	Project	$	$/kW
10	ASH/SPENT SORBENT HANDLING SYS											
10.1	Ash Coolers	N/A	$0	N/A	$0	$0	$0	$0	$0	$0	$0	$0
10.2	Cyclone Ash Letdown	N/A	$0	N/A	$0	$0	$0	$0	$0	$0	$0	$0
10.3	HGCU Ash Letdown	N/A	$0	N/A	$0	$0	$0	$0	$0	$0	$0	$0
10.4	High Temperature Ash Piping	N/A	$0	N/A	$0	$0	$0	$0	$0	$0	$0	$0
10.5	Other Ash Recovery Equipment	N/A	$0	N/A	$0	$0	$0	$0	$0	$0	$0	$0
10.6	Ash Storage Silos	$657	$0	$1,959	$0	$0	$2,616	$301	$116	$0	$3,033	$5
10.7	Ash Transport & Feed Equipment	$10,093	$0	$5,002	$0	$0	$15,095	$1,686	$675	$0	$17,455	$28
10.8	Misc. Ash Handling Equipment	$0	$0	$0	$0	$0	$0	$0	$0	$0	$0	$0
10.9	Ash/Spent Sorbent Foundation	$0	$626	$712	$0	$0	$1,337	$147	$60	$0	$1,544	$2
	SUBTOTAL 10.	**$10,751**	**$626**	**$7,673**	**$0**	**$0**	**$19,049**	**$2,134**	**$850**	**$0**	**$22,033**	**$36**
11	ACCESSORY ELECTRIC PLANT											
11.1	Generator Equipment	$2,001	$0	$314	$0	$0	$2,315	$255	$104	$0	$2,674	$4
11.2	Station Service Equipment	$5,672	$0	$1,901	$0	$0	$7,573	$829	$335	$0	$8,736	$14
11.3	Switchgear & Motor Control	$6,345	$0	$1,098	$0	$0	$7,444	$813	$331	$0	$8,588	$14
11.4	Conduit & Cable Tray	$0	$2,798	$9,866	$0	$0	$12,664	$1,378	$538	$0	$14,580	$23
11.5	Wire & Cable	$0	$5,181	$10,215	$0	$0	$15,396	$1,463	$660	$0	$17,519	$28
11.6	Protective Equipment	$370	$0	$1,273	$0	$0	$1,642	$181	$70	$0	$1,893	$3
11.7	Standby Equipment	$1,527	$0	$34	$0	$0	$1,561	$171	$70	$0	$1,802	$3
11.8	Main Power Transformers	$4,118	$0	$155	$0	$0	$4,273	$388	$192	$0	$4,854	$8
11.9	Electrical Foundations	$0	$408	$969	$0	$0	$1,377	$154	$61	$0	$1,592	$3
	SUBTOTAL 11.	**$20,034**	**$8,387**	**$25,825**	**$0**	**$0**	**$54,245**	**$5,633**	**$2,362**	**$0**	**$62,240**	**$100**
12	INSTRUMENTATION & CONTROL											
12.1	PC Control Equipment	w/12.7	$0	w/12.7	$0	$0	$0	$0	$0	$0	$0	$0
12.2	Combustion Turbine Control	N/A	$0	N/A	$0	$0	$0	$0	$0	$0	$0	$0
12.3	Steam Turbine Control	w/8.1	$0	w/8.1	$0	$0	$0	$0	$0	$0	$0	$0
12.4	Other Major Component Control	$0	$0	$0	$0	$0	$0	$0	$0	$0	$0	$0
12.5	Signal Processing Equipment	W/12.7	$0	w/12.7	$0	$0	$0	$0	$0	$0	$0	$0
12.6	Control Boards,Panels & Racks	$556	$0	$323	$0	$0	$878	$98	$39	$0	$1,016	$2
12.7	Distributed Control System Equipment	$6,170	$0	$1,046	$0	$0	$7,216	$795	$324	$0	$8,335	$13
12.8	Instrument Wiring & Tubing	$4,241	$0	$8,172	$0	$0	$12,414	$1,234	$550	$0	$14,197	$23
12.9	Other I & C Equipment	$1,585	$0	$3,489	$0	$0	$5,074	$576	$225	$0	$5,875	$9
	SUBTOTAL 12.	**$12,552**	**$0**	**$13,030**	**$0**	**$0**	**$25,582**	**$2,703**	**$1,137**	**$0**	**$29,423**	**$47**
13	IMPROVEMENTS TO SITE											
13.1	Site Preparation	$0	$63	$1,215	$0	$0	$1,277	$148	$56	$0	$1,481	$2
13.2	Site Improvements	$0	$2,081	$2,504	$0	$0	$4,585	$533	$204	$0	$5,322	$9
13.3	Site Facilities	$3,729	$0	$3,563	$0	$0	$7,293	$847	$325	$0	$8,465	$14
	SUBTOTAL 13.	**$3,729**	**$2,144**	**$7,282**	**$0**	**$0**	**$13,155**	**$1,528**	**$585**	**$0**	**$15,268**	**$25**
14	BUILDINGS & STRUCTURES											
14.1	FB Boiler Building Foundation	$0	$16,241	$13,521	$0	$0	$29,762	$3,180	$1,339	$0	$34,282	$55
14.2	Turbine Building	$0	$11,137	$9,826	$0	$0	$20,963	$2,246	$943	$0	$24,153	$39
14.3	Administration Building	$0	$1,035	$1,048	$0	$0	$2,083	$223	$93	$0	$2,400	$4
14.4	Circulation Water Pumphouse	$0	$222	$167	$0	$0	$390	$41	$18	$0	$449	$1
14.5	Water Treatment Buildings	$0	$720	$562	$0	$0	$1,282	$137	$58	$0	$1,476	$2
14.6	Machine Shop	$0	$923	$594	$0	$0	$1,517	$159	$68	$0	$1,744	$3
14.7	Warehouse	$0	$625	$601	$0	$0	$1,226	$131	$55	$0	$1,412	$2
14.8	Other Buildings & Structures	$0	$1,491	$1,339	$0	$0	$2,830	$287	$121	$0	$3,238	$5
14.9	Waste Treating Building & Str.	$0	$734	$2,133	$0	$0	$2,867	$321	$128	$0	$3,316	$5
	SUBTOTAL 14.	**$0**	**$33,129**	**$29,791**	**$0**	**$0**	**$62,920**	**$6,726**	**$2,823**	**$0**	**$72,469**	**$117**
	TOTAL COST	**$201,728**	**$60,610**	**$167,669**	**$0**	**$0**	**$430,007**	**$46,180**	**$19,192**	**$0**	**$495,379**	**$798**