Membrane Process to Sequester CO_2 from Power Plant Flue Gas

Award Number DE-FC26-07NT43085
First Semi-Annual Technical Report
Report Period: April 1, 2007 –September 30, 2007

by

Membrane Technology and Research, Inc.
1360 Willow Road, Suite 103
Menlo Park, CA 94025

October 2007

prepared for

The U.S. Department of Energy, NETL
Attn: Heino Beckert
626 Cochrans Mill Road
P.O. Box 10940
Pittsburgh, PA 15236-0940

Contributors:
Tim Merkel (PI)
Haiqing Lin
Richard Baker
Scott Thompson
Ramin Daniels
Jenny He
Adrian Serbanescu

Semi-Annual Progress Report
Covering Period: April 1, 2007 – September 30, 2007
Date of Report: October 2007

Award Number: DE-FC26-07NT43085

Project Title: Membrane Process to Sequester CO_2 from Power Plant Flue Gas

Type of Report: Semi-Annual

Project Period: 04/01/2007 to 03/31/2009

Recipient Organization: Membrane Technology and Research, Inc.
1360 Willow Road, Suite 103
Menlo Park, CA 94025

Technical Contact: Tim Merkel
650-328-2228 X 134
tcmerkel@mtrinc.com

Business Contact: Elizabeth Weiss
650-328-2228 X 142
egweiss@mtrinc.com

DOE Project Officer: Heino Beckert
Project Manager
National Energy Technology Laboratory
626 Cochrans Mill Road
P.O. Box 10940
Pittsburgh, PA 15236-0940
304-285-4132
heino.beckert@netl.doe.gov

DOE Contract Specialist: Juliana Heynes
DOE/NETL
626 Cochrans Mill Road
P.O. Box 10940
412-386-4872
Juliana.heynes@netl.doe.gov

DISCLAIMER

This report was prepared as an account of work sponsored by an agency of the United States Government. Neither the United States Government nor any agency thereof, nor any of their employees, makes any warranty, express or implied, or assumes any legal liability or responsibility for the accuracy, completeness, or usefulness of any information, apparatus, product, or process disclosed, or represents that its use would not infringe privately owned rights. Reference herein to any specific commercial product, process, or service by trade name, trademark, manufacturer, or otherwise does not necessarily constitute or imply its endorsement, recommendation, or favoring by the United States Government or any agency thereof. The views and opinions of authors expressed herein do not necessarily state or reflect those of the United States Government or any agency thereof.

ABSTRACT

The goal of this two-year research program for NETL is to assess the feasibility of using a membrane process to capture CO_2, and to determine the factors governing the competitiveness of this approach. During the first six months of the project, work focused on membrane development and scale-up, module fabrication and parametric testing, and process design studies. To date, technical targets have been met ahead of schedule and preliminary design findings suggest a promising CO_2 separation and liquefaction cost of \$20 - \$30/ton CO_2.

- MTR has developed membranes with CO_2 permeances approximately tenfold higher than commercial CO_2-selective membranes. During the reporting period, these high-permeance membrane formulations were successfully scaled up for production on commercial casting and coating equipment.
- Several conventional cross-flow and novel countercurrent/sweep modules were successfully fabricated from high-CO_2-permeance membranes.
- Based on the membrane and module performance obtained to date, flow schemes for CO_2 capture in a coal-fired 600 MW power plant were developed; 90% of the CO_2 in flue gas is captured as high-pressure liquid CO_2 ready for sequestration. The total power consumption of the process is 104 MW, or about 18% of the power plant's output. The expected cost of the CO_2 capture process including power at \$0.04/kWh is \$20 - \$30/ton CO_2.

The membrane, module and design findings to date meet the requirements for three out of the four critical path milestones. The remaining milestone is to complete a more rigorous technical and economic analysis of our best process design. This evaluation is ongoing and results will be included in future reports. We would also like to begin field test work by the second year of work on this technology, as part of this project or as part of a follow-on project. Critical issues such as the impact of residual particulate matter or other contaminants in flue gas on the membrane system can best be addressed by working with real flue gas. Insights from such a test will also be useful for scale-up of low-cost module skid designs that will improve the economics of this CO_2 capture process.

MEMBRANE PROCESS TO SEQUESTER CO_2 FROM POWER PLANT FLUE GAS

Table of Contents

EXECUTIVE SUMMARY 5

BACKGROUND 7

RESULTS AND DISCUSSION 9

Tasks 1 and 2. Membrane Development.....9

Task 3. Module Fabrication and Design Optimization.....11

Permeate-side Pressure Drop 12

Task 4. Bench-Scale System Construction 15

Task 5. Parametric Module Tests.....16

Parametric Tests of Cross-flow Module C1.....17

Parametric Tests of Countercurrent/Sweep Modules 20

Mixed-Gas CO_2/N_2 Separation Performance in Module S1 20

Mixed-Gas CO_2/N_2 Separation Performance in Module S2 23

A Comparison of Feed and Permeate Channel Pressure Drop in Modules S1 and S2 25

Task 5 Summary 27

Task 6. Process Designs and Technical/Economic Analysis.....27

The Limitations of Single-Stage Membrane Designs 27

Two-Step Membrane Design With Countercurrent Sweep.....30

CONCLUSIONS.....36

REFERENCES 37

Appendix A. Cost Plan and Status Report.....38

Appendix B. Critical Path Project Milestones 39

EXECUTIVE SUMMARY

This first semiannual report describes development of a membrane process to capture carbon dioxide (CO_2) from power plant flue gas. The work was conducted at Membrane Technology and Research, Inc. (MTR) from 1 April 2007 through 30 September 2007. The goal of this two-year research program is to assess the feasibility of using a membrane process to capture CO_2, and to determine the factors governing the competitiveness of this approach. During the first six months of the project, work focused on membrane development and scale-up, module fabrication and parametric testing, and process design studies. To date, technical targets have been met ahead of schedule and preliminary design findings suggest a promising CO_2 separation and liquefaction cost of \$20 - \$30/ton CO_2.

Direct CO_2 capture from power plant flue gas has been the subject of many studies, and while amine absorption seems to be the leading candidate technology, membrane processes have also been suggested. The Achilles heel of previous membrane processes has been the enormous membrane area required for separation because of the low partial pressure of carbon dioxide in flue gas. MTR is using a two-fold approach to address this issue:

(1) the development of high-permeance membranes to reduce the required membrane area and capital cost, and
(2) the use of incoming combustion air in a countercurrent/sweep module design to generate separation driving force and reduce the need for vacuum pumps and the associated parasitic energy cost.

MTR has developed membranes with CO_2 permeances approximately tenfold higher than commercial CO_2-selective membranes. These membranes also have the highest CO_2/N_2 selectivity for any non-facilitated transport polymeric material. This combination of permeance and selectivity meets the target range necessary to yield a competitive membrane CO_2 capture process. During the reporting period, these high-permeance membrane formulations were successfully scaled up using our company's commercial casting and coating equipment. Approximately 100 square meters of membrane were prepared for stamp testing and use in module fabrication.

Several conventional cross-flow and novel countercurrent/sweep modules were successfully fabricated from high-CO_2-permeance membranes. These modules were evaluated on a mixed-gas test system designed and built for this project. Parametric tests on cross-flow modules confirm their near-ideal performance under vacuum operation. This finding validates design calculations for cross-flow modules used in the first step of the proposed membrane CO_2 capture process. The second and critical step of this process relies on newly-developed countercurrent/sweep modules. Tests on such modules clearly demonstrate the effectiveness of air sweep operation. Under typical flue gas conditions, sweep operation can enhance the CO_2 flux through a module by 10 to 20-fold. These results confirm that sweep modules can be used to reduce the use of vacuum pumps and the related parasitic energy losses. Further improvements in sweep module performance are possible if inefficiencies related to module and channel geometry can be overcome.

Based on the membrane and module performance obtained to date, flow schemes for CO_2 capture in a coal-fired 600 MW power plant have been developed; 90% of the CO_2 in flue gas is captured as high-pressure liquid CO_2 ready for sequestration. The total power consumption of the process is 104 MW, or about 18% of the power plant's output. The expected cost of the CO_2 capture process including power at \$0.04/kWh is \$20 - \$30/ton CO_2. Design calculations show that increasing membrane permeance or reducing the installed membrane cost can further improve the economics of CO_2 capture. High membrane CO_2/N_2 selectivity is beneficial; however, selectivity values above 30 produce little additional improvement in system performance due to pressure ratio limitations.

The membrane, module and design findings summarized above meet the requirements for three out of the four critical path milestones defined at the outset of this project. The remaining milestone is to complete a more rigorous technical and economic analysis of our best process design. This evaluation is ongoing and results will be included in future reports.

Based on these promising initial findings, we recommend a field site demonstration be conducted in the near future. Field tests are an invaluable way to investigate membrane system performance under real world conditions. Critical issues such as the impact of residual particulate matter or other contaminants in flue gas on the membrane system can best be addressed by working with real flue gas. Insights from such a test will also be useful for scale-up of low-cost module skid designs that will improve the competitiveness of CO_2 capture with membranes.

BACKGROUND

Carbon dioxide (CO_2) emissions from coal-fired power plants are believed to contribute significantly to global warming climate change.[1] The direct approach to address this problem is to capture the carbon dioxide in flue gas and sequester it underground.[2-4] However, the high cost of separating and capturing CO_2 with conventional technologies prevents the adoption of this approach. This project investigates the technical and economic feasibility of a new membrane process to capture CO_2 from power plant flue gas.

Direct CO_2 capture from power plant flue gas (referred to as simply "flue gas" for the rest of this report) has been the subject of many studies. Currently, CO_2 capture with amine absorption seems to be the leading candidate technology—although membrane processes have been suggested.[5, 6] The Achilles heel of previous membrane processes has been the enormous membrane area required for separation, because of the low partial pressure of carbon dioxide in flue gas. To address this problem, MTR has proposed a two-pronged strategy:

1. Develop extremely permeable membranes to reduce the membrane area required for CO_2 capture, and
2. design novel countercurrent/sweep modules and use combustion air to generate a driving force for CO_2 transport through these modules.

Membrane permeance directly impacts the capital cost and footprint of a membrane CO_2 capture system. Current commercial membranes have insufficient CO_2 permeances, resulting in membrane areas and capital costs that are not economically competitive with other technologies or the DOE's carbon capture goals. Recently, MTR has developed new membranes with ten times the CO_2 permeance of conventional gas separation membranes. These membranes are part of the solution to achieving an economical carbon capture process.

The second aspect of our membrane solution is to use a countercurrent/sweep module design that utilizes incoming combustion air as the sweep gas to generate separation driving force, thereby reducing the need for energy intensive compressors or vacuum pumps.[7] Figure 1 shows a simplified flow scheme illustrating our approach. In this design, after electrostatic precipitation and desulfurization treatment (not shown), the flue gas from the boiler (stream ①) is directed to a conventional cross-flow membrane module. Driving force for separation in this module is generated by a permeate-side vacuum pump. The CO_2-and-water-enriched permeate (stream ②) undergoes a series of compression-condensation steps that recover greater than 99% of the water in flue gas. The dried CO_2 (stream ⑦) is then sent to a final compression-condensation-membrane loop that generates a 99+% liquid CO_2 stream ready for sequestration. The CO_2-depleted flue gas that leaves as the residue from the first membrane step (stream ③) is sent to a second membrane step that employs a countercurrent/sweep module. This module uses incoming combustion air (stream ④) as a sweep to generate driving force for CO_2 transport. The air sweep strips CO_2 from the flue gas and then is sent to the boiler for combustion (stream ⑤). The treated flue gas leaves as the residue of the sweep module (stream ⑥) and is directed to the power plant stack. Because water has been removed by the membrane process, no reheating of the flue gas is required to prevent condensation in the stack.

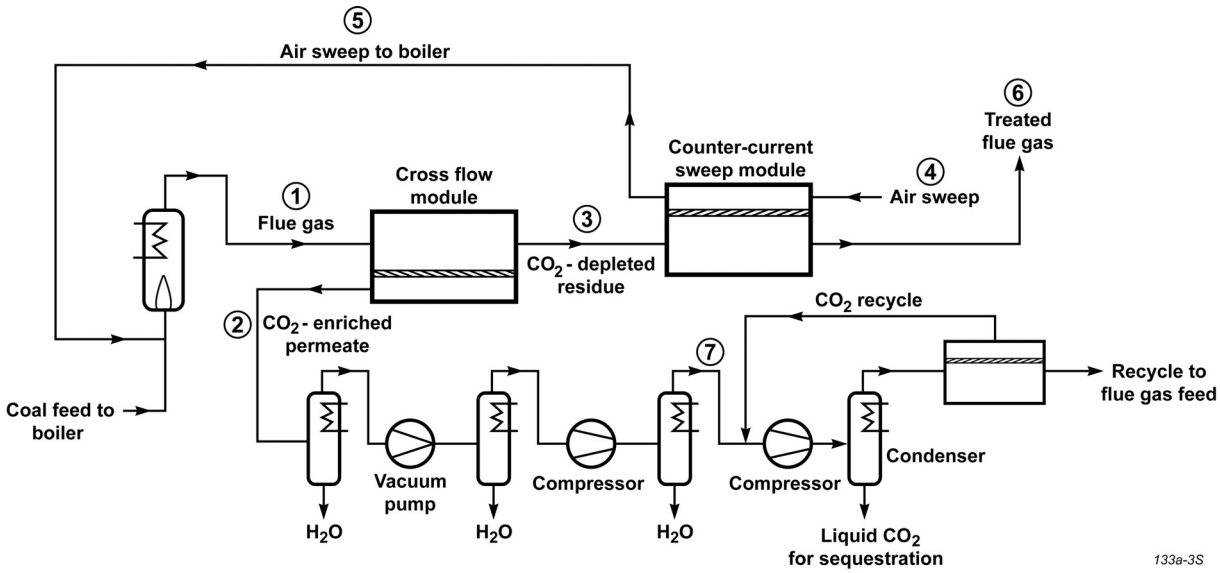

Figure 1. Simplified flow diagram of the proposed membrane process to capture and sequester CO_2 in flue gas from a coal-fired power plant.

This membrane process design has a number of benefits:

(1) Capture of 90% of the CO_2 as a high-pressure liquid is achieved.
(2) Using an existing air stream to generate a CO_2 partial pressure gradient in the second membrane step reduces the need for compressors or vacuum pumps and the associated energy costs. In this way, the sweep module avoids the energy penalty of compression or vacuum treatment and provides an essentially "free" separation.
(3) By recycling CO_2 to the boiler via the air sweep loop, the CO_2 concentration in the flue gas exiting the boiler increases from about 13% to approximately 18%. This increases the CO_2 partial pressure driving force for transport in the first membrane step. Consequently, the membrane area and system cost is reduced.
(4) Almost all of the water in flue gas is recovered as liquid condensate in the permeate of the first membrane step. This eliminates the need for reheating the flue gas before sending it to the stack.
(5) The total energy cost of the entire capture process is approximately 104 MW. This represents 18% of the energy produced by the power plant.

Improved process flow schemes may be possible and will be a subject of study in this program. Regardless of the specifics of the optimized design, development of higher-permeance membranes and countercurrent/sweep modules will be key to the success of our approach. By the end of the project, we expect to have developed prototype industrial-scale membranes and membrane modules. These modules will be characterized in bench-scale tests and this information will be used to gauge the competitiveness of the membrane CO_2 capture process.

RESULTS AND DISCUSSION

During this project period, progress was made on several different tasks; highlights include:

- Membranes with transport properties better than the original project targets were developed. These membranes have CO_2 permeances approximately tenfold higher than commercial CO_2 membranes, and two- to three-fold higher than our baseline membrane properties used for the proposal design calculations.
- High permeance membrane formulations were successfully scaled up and produced on our commercial casting and coating equipment. Over 100 m^2 of membrane were prepared.
- Conventional cross-flow and novel countercurrent/sweep modules were successfully fabricated from high-CO_2-permeance membrane.
- A new mixed-gas test system was designed and built to allow parametric module testing under different sweep and non-sweep conditions.
- Mixed-gas module test data were collected that (a) confirm near-ideal performance of cross-flow vacuum operation and (b) demonstrate the effectiveness of sweep operation.
- A new membrane process design was identified that reduces the parasitic energy required for CO_2 capture.

Specific details of these results are reported below, organized by task number as described in the project statement of work.

Tasks 1 and 2. Membrane Development

Current membranes cannot capture CO_2 from flue gas in an economically viable manner because the low partial pressure of CO_2 in flue gas, combined with the enormous gas flow rates of coal-based power plants, require prohibitively large membrane areas. Our design calculations show that membranes with a CO_2 permeance of greater than 1,000 gpu (where 1 gpu = 10^{-6} cm^3 (STP)/ $cm^2 \cdot s \cdot cmHg$) are needed to make CO_2 capture with membranes economically feasible. This value is five to ten times higher than current commercial CO_2 separation membranes.

In addition to being highly permeable, sequestration membranes should have good CO_2/N_2 selectivity. Our original target was a CO_2/N_2 selectivity of at least 50 at typical flue gas operating conditions. As we will show in the Task 6 (system design) section of this report, calculations indicate that for CO_2/N_2 selectivities of greater than 30, very little additional improvement in system performance is realized due to pressure ratio limitations. Consequently, for expected flue gas conditions, enhancement of membrane permeance is much more important to system performance than further increases in selectivity.

Figure 2 shows a CO_2/N_2 selectivity versus CO_2 permeance trade-off plot for MTR membranes developed for this project. Polymeric membranes typically exhibit a trade-off relationship between selectivity and permeance; highly selective membranes have low permeances and vice versa. This relationship holds for the sequestration membranes developed in this project. The membranes with the highest CO_2/N_2 selectivity (ranging from 50-60) have the lowest CO_2 permeance (~1,000 gpu), while the very high permeance membranes (>4,000 gpu) have the

lowest selectivity (~25). It should be noted that all of these membranes perform substantially better than typical commercial CO_2-selective membranes. For example, a good cellulose acetate membrane used for removing CO_2 from natural gas has a CO_2 permeance of around 100 gpu combined with a CO_2/N_2 selectivity of 30.

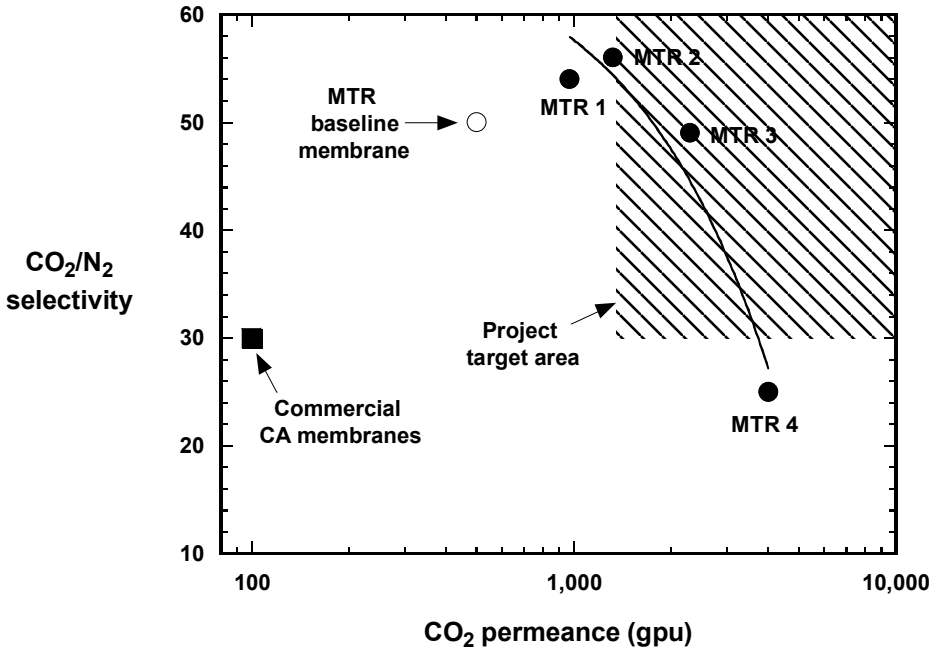

Figure 2. A CO_2/N_2 trade-off plot showing data for MTR membranes developed during this project (MTR 1-4) compared with the baseline MTR membrane described in our proposal and the properties of a good commercial cellulose acetate (CA) membrane. The shaded region in the upper-right-hand corner of the plot is the membrane performance target area that is necessary for an economic CO_2 capture process. Data are at room temperature.

As shown in Figure 2, the transport properties of the membranes developed for this program (MTR 1-4) exceed those of our baseline membrane and extend into the target performance window. Several of these membrane formulations have been scaled up for production on our commercial casting and coating equipment. Approximately 100 m^2 of membrane has been produced and used for module fabrication, as described in the next task.

Future membrane work will focus primarily on small refinements to the existing formulations to enhance membrane permeance. In addition, we will examine the effect of temperature on membrane performance. It is anticipated that operation at typical flue gas stack temperatures (50°C) will increase membrane permeance, while slightly decreasing CO_2/N_2 selectivity, when compared to room temperature performance. Based on our membrane sensitivity study shown in Section 6, higher temperature operation that yields higher permeances will be beneficial to the overall CO_2 capture process.

% Tasks 1 and 2 completed: 75%.

Task 3. Module Fabrication and Design Optimization

In addition to membranes with high CO_2 permeance, a key innovation that makes capture of CO_2 in flue gas with membranes feasible is the use of combustion air as a sweep gas to generate driving force for separation. An air sweep reduces the partial pressure of CO_2 on the permeate side of the membrane, allowing more CO_2 to permeate the membrane. This sweep design replaces a vacuum pump and reduces energy consumption. To utilize air for this purpose requires the development of countercurrent/sweep modules.

Figure 3 shows a diagram of a conventional gas separation spiral-wound module. This device consists of alternating sheets of membrane and spacers wound around a central collection pipe. The spacers create flow channels for the feed and permeated gases as well as providing mechanical support for the membrane sheets. Feed passes axially down the module across the membrane envelope. A portion of the feed permeates the membrane, flows toward the center of the module, and exits through the permeate collection pipe.

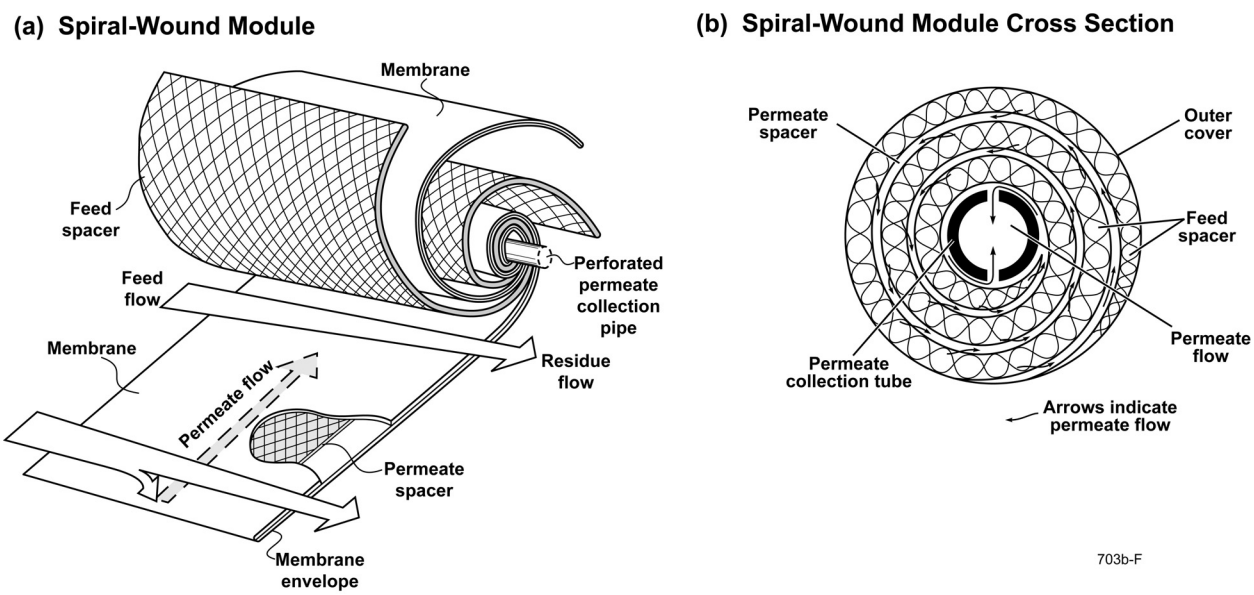

Figure 3. (a) Exploded view of a conventional spiral-wound gas separation module and (b) a cross-section of this module.

The membrane industry standard spiral-wound module is an 8-inch-diameter module containing 15 to 30 membrane envelopes with a total membrane area of 20 to 40 m^2 per module. Spiral-wound modules have captured more than 90% of the reverse osmosis market, more than 70% of the ultrafiltration market, and perhaps 30% of the gas separation market.[8] This module design is robust, fouling resistant, and – most importantly – very economical.

Modification of a conventional spiral-wound module for use as the simplest possible counter-flow membrane contactor is illustrated in Figure 4. This figure shows an exploded view of a single membrane envelope. Two simple changes are required to achieve a countercurrent effect. First, the permeate collection pipe is closed in the middle, forming two separate compartments. Second, during module fabrication, additional glue lines are applied to direct gas flow in the

permeate channel. As shown in Figure 4(b), these modifications allow the permeate channel to be swept with a sweep gas and the module to operate in a countercurrent mode. Permeate gas flows countercurrent to the feed gas flow.

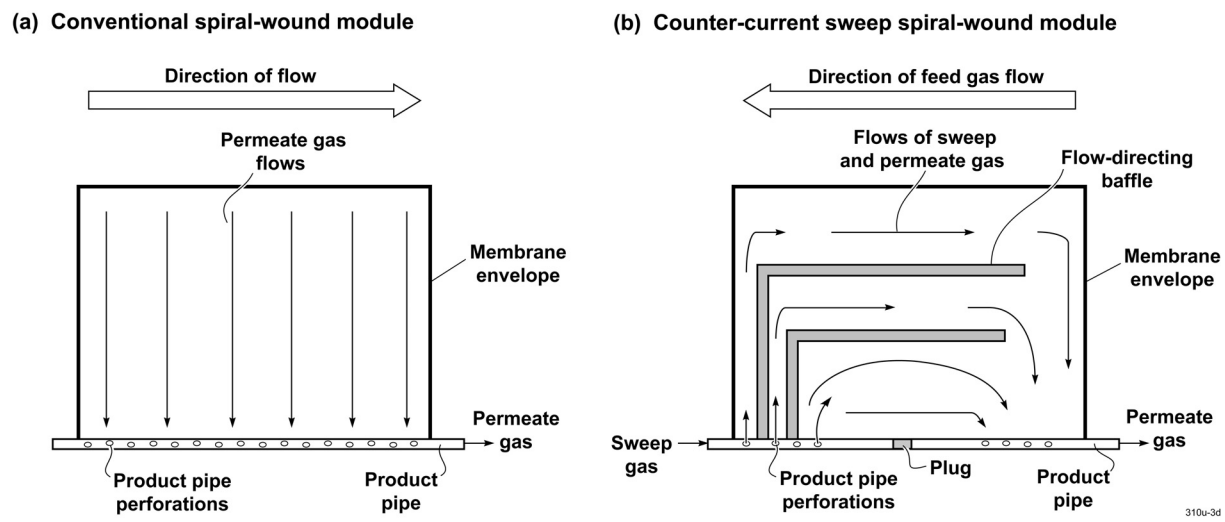

Figure 4. Unwound view of the membrane envelope for two types of spiral-wound modules. The flow pattern in the conventional module (a) is cross-flow, whereas the modified module (b) accepts a sweep gas on the permeate side and operates in a partial countercurrent pattern.

MTR has used the simple, countercurrent/sweep module design – shown in Figure 4(b) - in research projects for several years, and it has been effective for certain separations and process conditions. However, in carbon dioxide sequestration, where the pressure differential across the membrane is low, it may be necessary to revisit the module design to optimize separation. Previous results for similar process conditions have shown that there are several potential inefficiencies that limit the effectiveness of countercurrent/sweep operation. These potential inefficiencies include sweep-side pressure drop, concentration polarization (especially on the sweep side in the porous support layer of the membrane), poor utilization of membrane area due to module geometry, and non-countercurrent flow patterns.

The goal of module design work is to minimize these inefficiencies. Preliminary sweep module test results, which are discussed later in this report (see Task 5), show that our current design yields effective sweep operation. Nevertheless, the actual module performance is as much as 40% below the theoretical performance indicating that there is room for module design improvement. Such improvement would reduce the required membrane area, and thus, the cost of capturing CO_2.

Permeate-side Pressure Drop

One module characteristic that can reduce the effectiveness of sweep operation is permeate or sweep-side pressure drop. If there is significant resistance to gas flow through the sweep side of a module, additional energy will be required to push gas through the module elements. In addition, higher pressure at the module sweep-side entrance is detrimental to system

performance because it will increase the driving force for undesirable oxygen transport through the membrane. Because of the low operating pressure of the flue gas treatment system, even small pressure drops within a module should be avoided to maximize efficiency. This situation is challenging and different from conventional high-pressure membrane separations where 5 to 20 psi pressure drops through a module are typical and easily tolerated.

Flow channels in spiral-wound modules are created by spacer elements. Alternating sheets of membrane and spacers are wound around a central collection pipe, as shown in Figure 3(a). In addition to forming flow channels for the feed and permeated gases, spacers provide mechanical support for the membrane sheets. Most spacers are made from relatively low-cost plastics (polyethylene, polypropylene, polyesters) extruded into nettings or meshes formed by woven/nonwoven textile methods. An example of a spacer material is shown in Figure 5. Such spacers are used in gas separation and reverse osmosis modules because of their low cost, ability to resist channel collapse in high-pressure-differential operation, and inherently tortuous flow path that promotes good mixing and limits boundary layer effects.

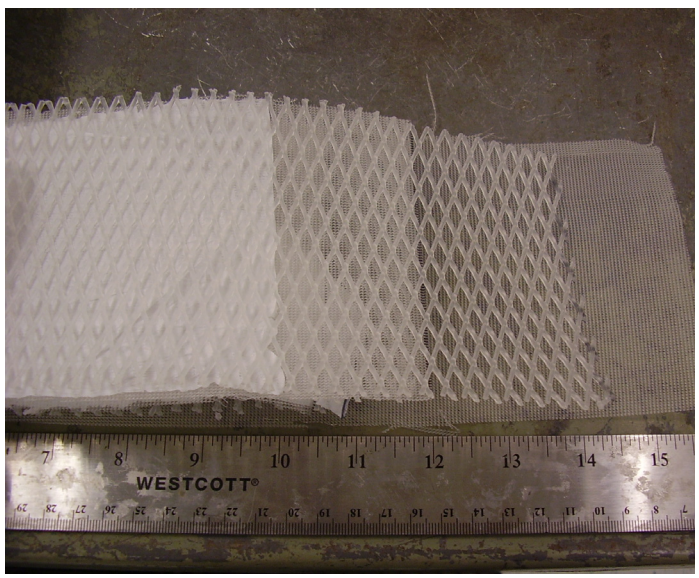

Figure 5. An example of a netting spacer used in gas separation membrane modules.

Pressure drop of a gas in a spacer channel is caused by flow resistance. Different spacer materials impart different flow resistances depending on the porosity and geometry of the spacer. The pressure drop through a porous spacer channel can be described by the Dusty-Gas model, which has the following form for a single gas:[9]

$$J = K\Delta P / L \tag{1}$$

where J is the gas molar flux, K is the permeability coefficient of the channel, ΔP is the pressure drop in the channel, and L is the channel length. The channel permeability coefficient consists of diffusive (Knudsen diffusion) and convective contributions:

$$K = D + B\overline{P} \tag{2}$$

where D is the Knudsen diffusion coefficient, B is a convective flow parameter, and $\overline{P}$ is the average pressure in the channel. According to equation (2), a plot of the permeability coefficient versus the average channel pressure will yield a straight line with a slope equal to B and an intercept equal to D. For spacer materials such as those shown in Figure 5, the Knudsen contribution is negligible ($D = 0$), and simple flow tests can be used to determine B. Data from such tests can be used to compare different materials and estimate the anticipated pressure drop in a full-scale module.

We conducted a series of flow rate versus pressure drop experiments in a specially designed test cell to quantify the flow characteristics of different spacer materials. This cell allows for rapid screening and evaluation of the intrinsic flow properties of different spacers. Table 1 shows the convective flow parameter, B, for several different spacers used by MTR. The convective flow parameter characterizes the relative ease of flow through a spacer, with higher B values indicating less resistance to transport. The data in Table 1 show that the ease of transport through the spacers examined varies by nearly two orders of magnitude. Consequently, for the same flow rate and cross-sectional area, a spacer channel formed by Type RP will incur substantially lower pressure drop than one formed by Type H1. At the same time, the Type H1 spacer, because it is denser, provides better mechanical support for the membrane. These factors must be balanced when choosing the appropriate material for an application. Because of the low operating pressures and minimal pressure drop requirements for sequestration, open spacers such as Type RP are preferred.

Table 1. Convective Flow Coefficient, B, for Various Module Spacers.

Spacer Type Tested[a,b]	Spacer Height (mm)	Viscous Flow Coefficient (B), (cm^3 (STP) cm / (cm^2·s·$cmHg^2$))
Two Type H1	0.370	2.04
Two Type S MD	0.312	4.57
Two Type 10PR MD[c]	0.384	12.4
Two Type H2 MD	0.480	12.8
One Type LP MD	0.508	25.6
One Type LN CD	0.520	27.3
One Type LN MD	0.520	61.6
One Type RP MD	0.846	138

a. Each Type designation for a spacer (for example, Type H, Type S) represents a different chemical/ polymer composition; specific compositions are confidential.
b. MD = machine direction; CD = cross direction.
c. The 10 PR spacers were nested; actual thickness of a single spacer is 0.254 mm.

The spacer flow parameters summarized in Table 1 have been utilized to select the appropriate materials for use in the membrane modules that are tested and described in Task 5. These data also allow the pressure drop in full-scale module skids that will be used to treat flue gas to be estimated.

% Task 3 completed: 70%.

Task 4. Bench-Scale System Construction

Due to the frequency and nature of module tests required in this project, we designed and built a dedicated bench-scale system for evaluating module performance. A picture of this test system is shown in Figure 6. The system has the capacity to test both cross-flow and countercurrent/sweep modules with simulated flue gas mixtures. Various operating parameters, such as flow rates, temperature, and pressures, can be varied over the anticipated flue gas conditions. This system is now fully operational and was used to collect some of the performance data described in Task 5.

Figure 6. Mixed-gas bench-scale module test system.

Figure 7 shows a flow diagram for the module test system. The cross-flow and countercurrent/sweep pressure vessels are situated in parallel, allowing for easy switching between module types during testing. Both vessels take the same stream as feed, which is split downstream of the compressor. The residues of both vessels are recycled to the compressor. However, while the permeate stream of the cross-flow vessel is recycled, the permeate and sweep stream of the countercurrent module is vented to the atmosphere. The sweep stream is

pure air, and venting the permeate and sweep stream prevents the recycle loop from being diluted with this gas. Because of the partial pressure difference between permeate and feed sides, some oxygen will permeate to the feed side of the sweep module and build up in the recycle loop. Thus, for safety reasons, an oxygen sensor is in place on the feed side of the module.

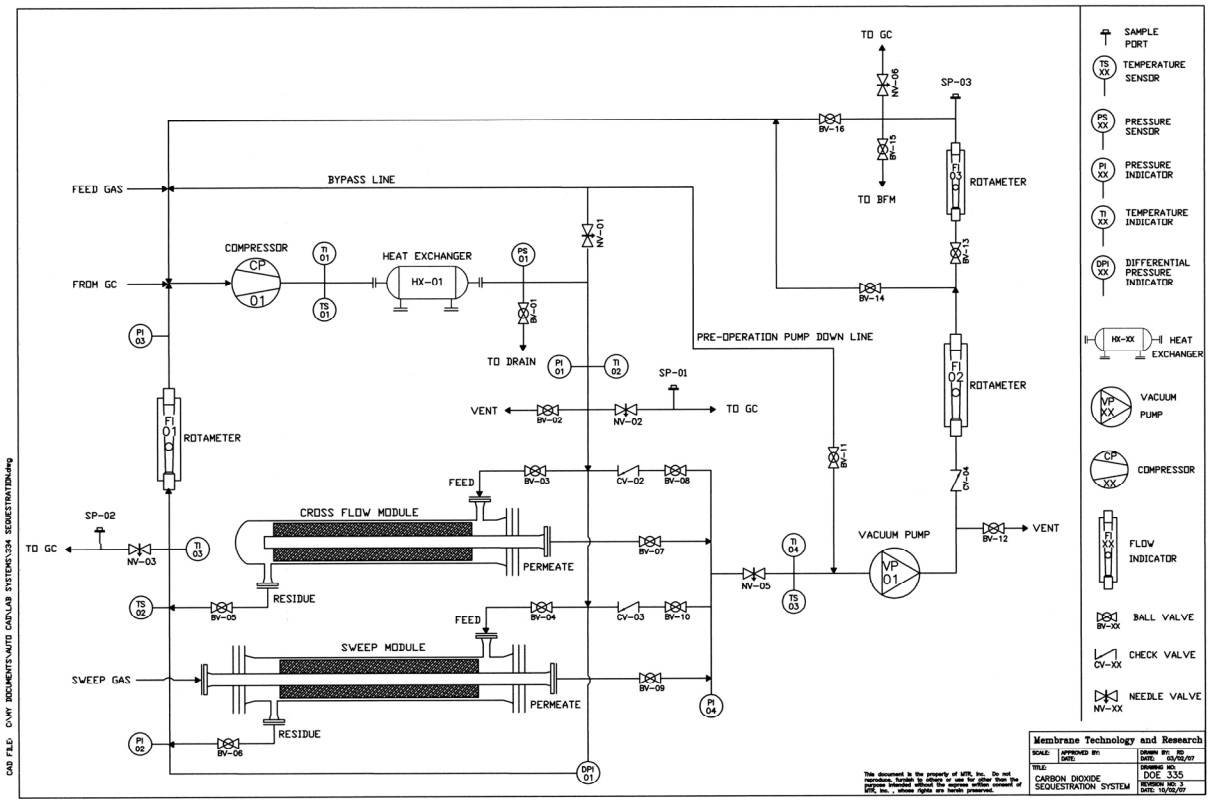

Figure 7. Flow diagram for the module test system built to test cross-flow and countercurrent/sweep modules in parallel.

% Task 4 completed: 100%.

Task 5. Parametric Module Tests

Using the new system built in Task 4, parametric testing was conducted on the membrane modules fabricated in Task 3. The purpose of these tests was to evaluate how well actual module performance matches the intrinsic membrane properties used in design calculations, and to identify areas where module improvement efforts should be focused.

As shown in our proposed process design (see Figure 1), to effectively recover CO_2 from flue gas, two different types of spiral-wound modules are required – conventional cross-flow modules to provide a first-cut bulk CO_2 removal, and countercurrent/sweep modules to recover the remainder of the CO_2 in a cost- and energy-efficient manner. During this reporting period, we have fabricated one cross-flow module (C1) and two countercurrent/sweep modules (S1 and S2). Table 2 compares module characteristics and pure-gas permeances at 22°C.

Table 2. Module Characteristics and Pure-Gas Permeances in Modules C1, S1, and S2 at 22°C. Feed pressure is 10 psig and permeate pressure is 0 psig. All modules were made from MTR's sequestration membranes.

Module #	Module Type	Membrane Batch	Membrane Area (m^2)	Permeance (gpu)		Selectivity CO_2/N_2
				N_2	CO_2	
C1	Cross-flow	21-220	0.90	12	530	44
S1	Countercurrent/ sweep	21-220	0.49	12	500	42
S2		21-518	1.1	18	840	47

Modules C1 and S1 were fabricated using the same membrane batch (21-220), while module S2 was made using a newer membrane batch (21-518). Membrane 21-518 has higher pure-gas permeance than membrane 21-220, because the selective layer in 21-518 is thinner. All three modules have CO_2/N_2 selectivities of 40-50, indicating that these modules are defect-free. Gas permeances in these modules are also consistent with those of the corresponding membranes from which they were fabricated.

Parametric test results in the cross-flow module (C1) and countercurrent/sweep modules (S1 and S2) are discussed separately in the following sections.

Parametric Tests of Cross-flow Module C1

MTR routinely makes cross-flow modules for commercial and research purposes. In this project, the cross-flow module C1 has a standard MTR design with three membrane envelopes. This module was tested at various permeate pressures, feed pressures, and feed compositions to confirm the performance of the MTR sequestration membrane in the bulk CO_2 separation step of the flue gas treatment, using a vacuum to help provide the pressure differential. In general, the tests demonstrate that a cross-flow module operating under anticipated flue gas conditions can achieve CO_2 fluxes very close to those expected based on membrane properties.

Figure 8 summarizes module test results with a feed gas containing 10% CO_2 and 90% N_2.

- Figure 8(a) shows mixed-gas CO_2 flux through the module as a function of permeate pressure at two feed pressures, 20 psia and 30 psia. As feed pressure increases or permeate pressure decreases, the CO_2 partial pressure difference across the membrane increases, leading to an increase in the CO_2 flux.
- Figure 8(b) shows the ideality of membrane separation performance in module C1, which is characterized by the percentage of measured CO_2 flux through the membrane relative to the maximum theoretical CO_2 flux. The maximum theoretical or ideal CO_2 flux values were calculated using a ChemCAD-based membrane process simulator and the measured pure-gas membrane permeances. The simulation yields ideal CO_2 flux through the module based on process conditions (feed composition, pressures, flow rate, and membrane area) and the measured pure-gas CO_2 permeance of 530 gpu and N_2 permeance of 12 gpu. The measured CO_2 flux is within 20% of the theoretical maximum flux for all cases except when the permeate pressure is low (1.0 psia).

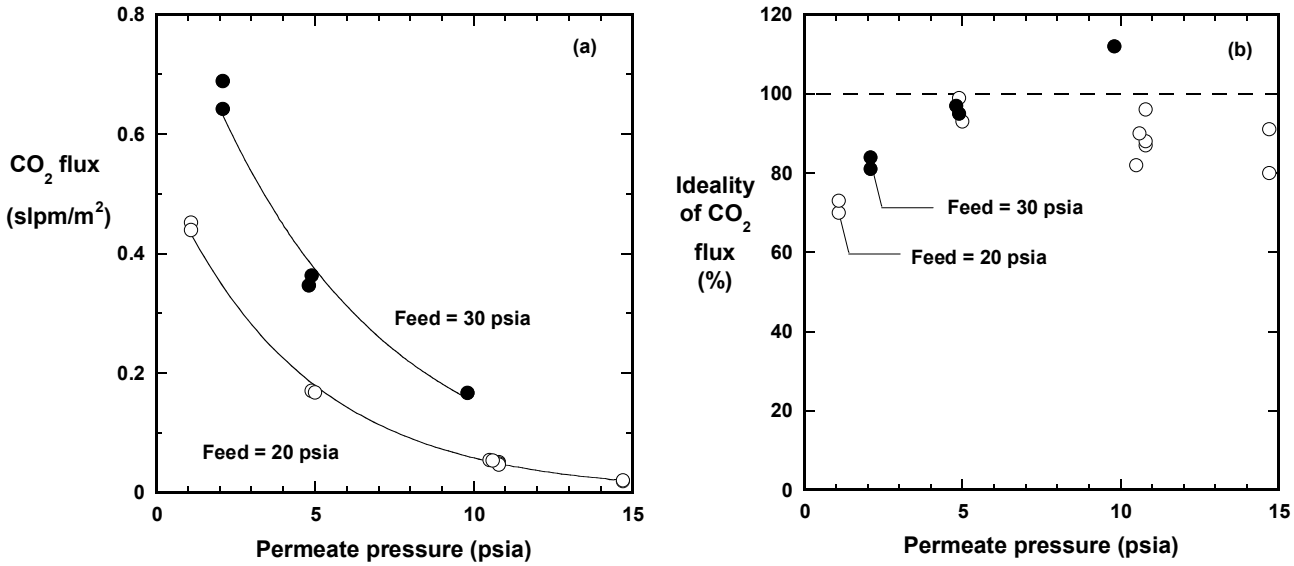

Figure 8. CO_2/N_2 separation performance in cross-flow module C1 with a feed gas containing 10% CO_2 and 90% N_2. (a) CO_2 flux (slpm/m^2: standard liters per minute/square meter of membrane area) as a function of permeate pressure at feed pressures of 20 psia and 30 psia. The lines are provided to guide the eye. (b) Ideality of CO_2 flux, which is defined as the percentage of measured CO_2 flux relative to the theoretical maximum or ideal CO_2 flux. The values of the ideal CO_2 flux were obtained using a ChemCAD simulation, enhanced with membrane process code. The simulation uses the membrane pure-gas permeances of CO_2 (530 gpu) and N_2 (12 gpu).

One reason that the measured fluxes are below the expected values at low permeate pressure may be inaccurate permeate pressure measurements. The permeate pressure can only be measured outside of the module. In general, there is a pressure drop in the permeate flow path; that is, the real permeate pressure inside the module is often higher than the measured permeate pressure outside the module. At very low permeate pressures, a small pressure drop in the permeate flow path inside the module can significantly decrease the observed CO_2 flux. For example, we have performed a simulation for the cases where the measured permeate pressure is 1.0 psia. If the real permeate pressure is assumed to be 1.6 psia, the simulated CO_2 flux would be the same as the measured CO_2 flux.

Figures 9(a) and 9(b) show the module test results when the feed contains 20% CO_2 and 80% N_2. As demonstrated in Figure 9(a), CO_2 flux increases with increasing feed pressure and decreasing permeate pressure. Figure 9(b) shows that the measured CO_2 flux is very close to the calculated CO_2 flux obtained from ChemCAD simulations. These trends are similar to those observed in Figure 8.

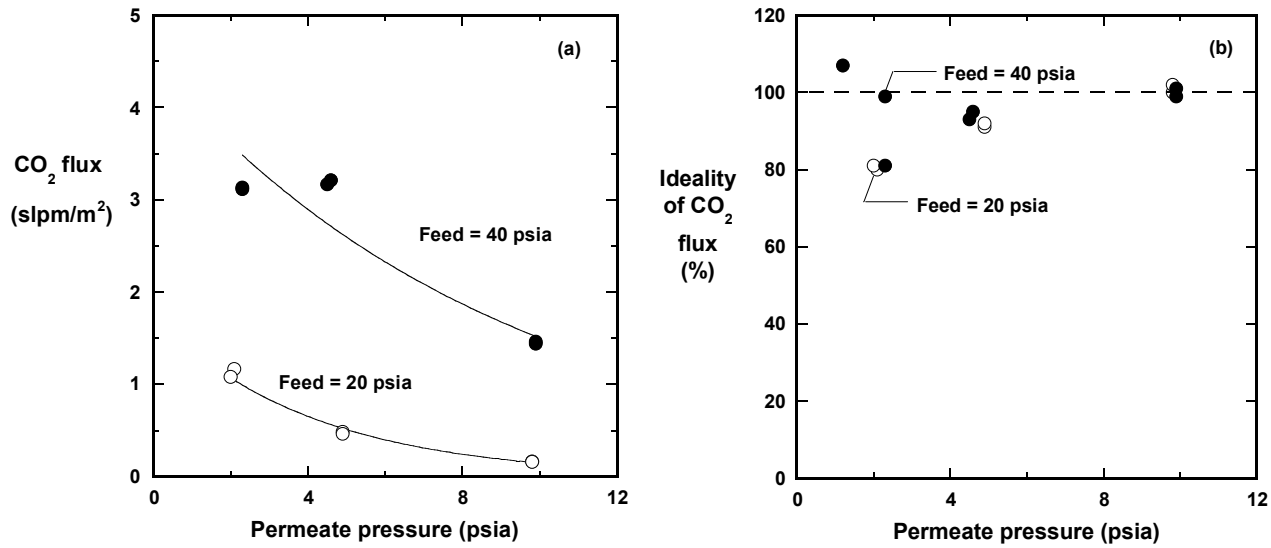

Figure 9. CO_2/N_2 separation performance in cross-flow module C1 with a feed containing 20% CO_2 and 80% N_2. (a) CO_2 flux as a function of permeate pressure at feed pressures of 20 psia and 40 psia. The lines are provided to guide the eye. (b) Ideality of CO_2 flux. The definition of ideality is explained in the caption to Figure 8.

Figure 10 shows CO_2/N_2 separation performance (or CO_2 enrichment) in module C1 by presenting the permeate CO_2 concentration as a function of feed CO_2 concentration. Clearly, the module enriches CO_2 in the permeate stream. For example, one pass through module 4389 concentrates CO_2 from 7.0% in the feed to 21.7% in the permeate, or from 14.1% in the feed to 42.9% in the permeate. Figure 10 also compares the experimental separation performance to the simulated or theoretical performance. The experimental results are generally in good agreement with the simulated values, indicating that the cross-flow module design performs as expected. At low permeate pressure, the experimental points fall slightly below the theoretical lines. This behavior is likely related to pressure drop on the permeate side and the difficulty in accurately measuring this parameter, as described earlier.

In summary, a cross-flow module of the type that would be used in the first step of our flue gas process design (see Figure 1) was successfully fabricated from high-performance membrane. This module was tested with a simulated flue gas (CO_2 and N_2) under a range of conditions that might be expected in the actual application and shows near-ideal performance. These experimental findings validate the process design calculations discussed in Task 6.

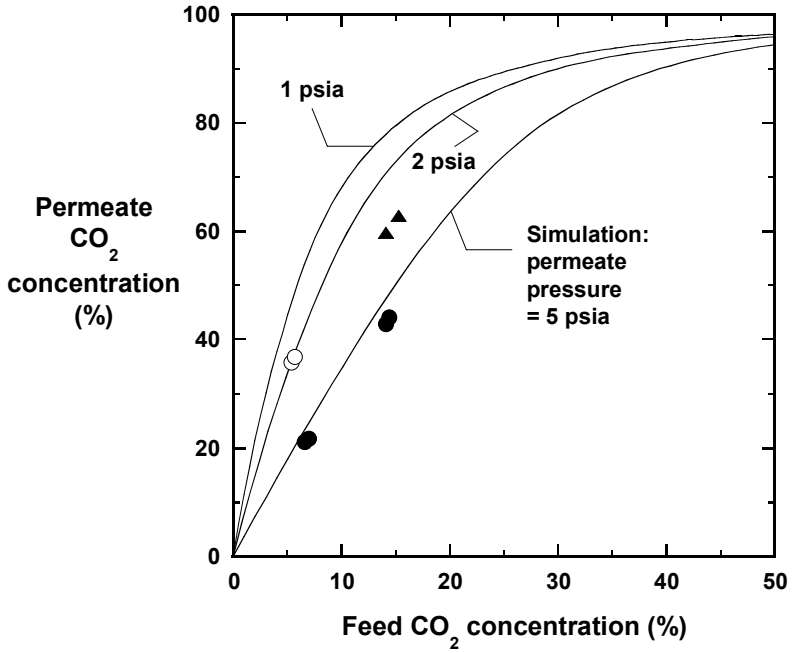

Figure 10. Comparison of experimental and simulated separation performance for module C1. The curves are simulated separation performance while the filled circles (●), filled triangles (▲), and unfilled circles (○) represent experimental results with permeate pressures of 5 psia, 2 psia, and 1 psia, respectively. Feed pressure is 20 psia. The theoretical curves were obtained using ChemCAD simulations with a CO_2 permeance of 530 gpu and a N_2 permeance of 12 gpu.

Parametric Tests of Countercurrent/Sweep Modules

Two countercurrent/sweep modules (S1 and S2) based on the MTR sequestration membranes were made during this reporting period. Module S1 was built and tested first; based on the results with this module, an improved second module (S2) was designed, fabricated, and tested. In this section, the experimental results for module S1 are described first, followed by a discussion of the rationale for module design improvements, and a comparison of the results for the improved sweep module (S2) compared to the initial one (S1).

Mixed-Gas CO_2/N_2 Separation Performance in Module S1

Figures 11(a) and 11(b) show test results for the countercurrent/sweep module S1 with a mixed-gas feed containing around 10% CO_2 and the balance N_2. The sweep gas is pure N_2 at ambient pressure, and the feed flow rates are about 15 slpm in all measurements. One of the challenges in performing these measurements is poor control of the feed gas composition. As shown in Figure 7, the residue gas is circulated using a compressor, while the permeate stream is vented. Therefore, make-up gas needs to be added to the feed stream continuously to maintain gas pressure and feed composition. Trial-and-error testing, using various make-up gas mixtures, was needed to maintain approximately constant feed gas composition and pressure during the measurements. For the reported measurements, CO_2 concentration in the feed is between 8% and 12%.

Figure 11(a) shows the measured CO_2 flux through the membrane as a function of sweep gas flow rate at feed pressures of 35 psia and 70 psia. As expected, increasing feed pressure increases CO_2 flux, due to the increase in CO_2 partial pressure difference across the membrane. Sweep gas can significantly increase CO_2 flux, especially at low sweep flow rates (or low values of sweep/feed flow rate). For example, as sweep/feed flow rate increases from 0% to 12% at the feed pressure of 35 psia, CO_2 flux increases tenfold, from 0.084 slpm/m^2 to 0.86 slpm/m^2. The increase in CO_2 flux with increasing sweep flow rate levels off at high sweep flow rates. For instance, in going from 12% to 70% sweep/feed flow rate, the CO_2 flux increases by about another factor of 2 to 1.6 slpm/m^2 (for a total 20-fold increase in CO_2 flux).

Figure 11(b) shows the ideality of membrane separation performance in module S1, which is the ratio of measured CO_2 flux to the simulated (or theoretical) CO_2 flux expressed as a percentage. The theoretical CO_2 flux values were obtained using a ChemCAD simulator enhanced with proprietary code to simulate a countercurrent/sweep membrane process. The simulation uses the pure-gas membrane permeances of the gases (a CO_2 permeance of 500 gpu and a N_2 permeance of 12 gpu). The ideality of CO_2 flux falls in the range of 60% to 80%. It should be noted that the ideality of CO_2 flux is essentially independent of sweep flow rates.

While sweep operation greatly enhances CO_2 flux, the countercurrent modules do not operate as ideally as the cross-flow module described in the previous section. Two possible reasons for the non-ideal countercurrent operation have been identified:

1. There is still some cross-flow of gas occurring in the countercurrent/sweep module. As shown in Figure 4, with the current module design, some of the sweep gas flows in a direction perpendicular to the feed flow instead of in a countercurrent manner.
2. Concentration polarization is occurring in the membrane supports (including the support paper layer and microporous PEI support). This concentration polarization decreases the mixing efficiency of the sweep gas and the gas permeating through the selective layer of the membrane.

The existence of residual cross-flow patterns and concentration polarization reduces the countercurrent/sweep efficiency in this module. Better designs for countercurrent/sweep spiral-wound modules are being considered. Nevertheless, in spite of the non-ideal behavior, the effect of sweep on CO_2 flux through the module is dramatic.

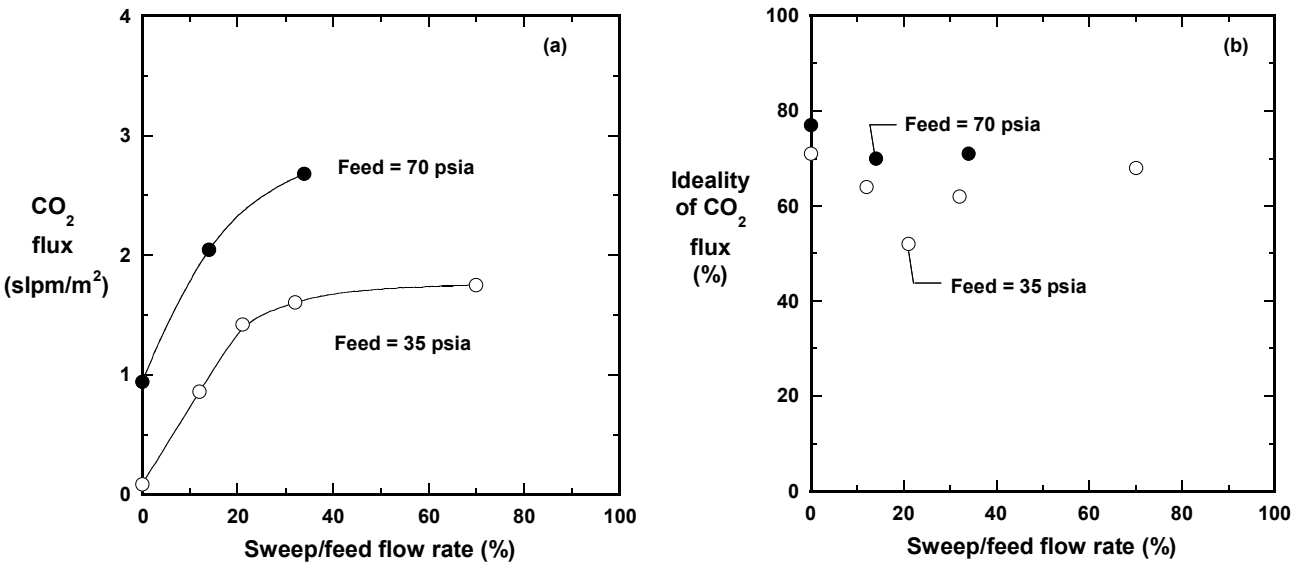

Figure 11. CO_2/N_2 separation performance in countercurrent/sweep module S1 with a feed containing approximately 10% CO_2 and the balance N_2. The feed flow rate is about 15 slpm. The sweep gas is pure N_2 at ambient pressure. (a) CO_2 flux as a function of sweep/feed flow rate at feed pressures of 35 psia and 70 psia. The lines are to guide the eye. (b) Ideality of CO_2 flux, which is the ratio of measured CO_2 flux to the simulated (theoretical) CO_2 flux expressed as a percentage. The theoretical CO_2 flux values were obtained using a ChemCAD simulator enhanced with proprietary code to simulate a countercurrent/sweep membrane process. The simulation uses the pure-gas membrane permeances (CO_2 = 500 gpu and N_2 = 12 gpu).

Figure 12 shows CO_2 removal in module S1 as a function of sweep/feed flow rate. CO_2 removal is defined as the percentage of CO_2 in the feed that permeates the membrane. The CO_2 removal efficiency increases with increasing sweep flow rate and then levels off at high sweep rates. This behavior is consistent with the higher driving force for CO_2 permeation at high sweep flow rates. Similarly, increasing the feed pressure increases the partial pressure driving force for CO_2 permeation. Consequently, the removal efficiency is enhanced at higher feed pressures.

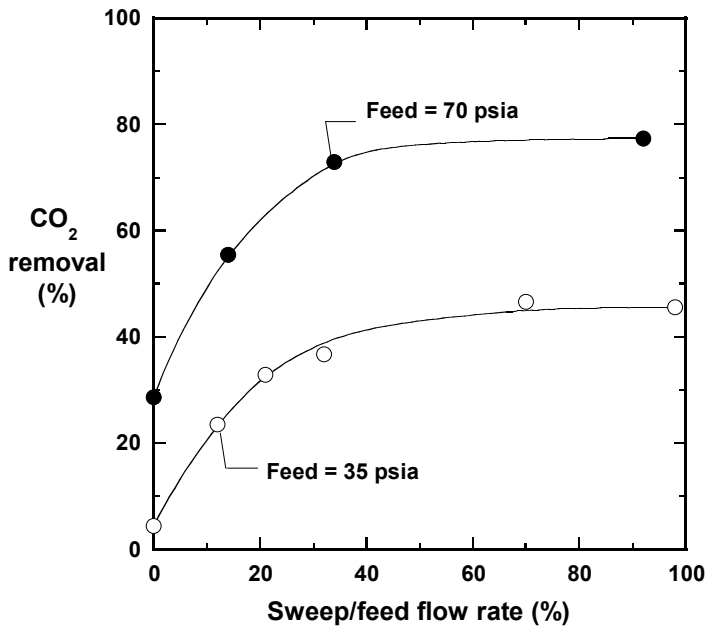

Figure 12. Effect of sweep/feed flow rate on CO_2 removal in module S1. Feed gas contains about 10% CO_2 and the balance N_2, and feed flow rate is about 15 slpm. The sweep gas is pure N_2 at ambient pressure. The lines are to guide the eye.

The test results in module S1 show that countercurrent/sweep design in the module can substantially improve CO_2/N_2 separation performance. CO_2 flux in this module can be increased 20-fold compared to cross-flow results by using a sweep gas, even though the ideality of the countercurrent/sweep effect is only 60-80%.

Mixed-Gas CO_2/N_2 Separation Performance in Module S2

In a first attempt to improve the performance of our countercurrent/sweep modules, a second module (S2) with different membrane and spacer configurations was designed and tested. Figure 13 compares the ideality of membrane separation performance in modules S1 and S2. Both were operated with a feed pressure of 35 psia and a feed stream containing about 10% CO_2 and the balance N_2. Module S1 was tested with a feed flow rate of 15 slpm, while module S2 had a feed flow rate of 36 slpm. Despite the modifications, module S2 only shows slightly better sweep efficiency than module S1, except at low sweep flow rates (sweep/feed flow rate ratio less than 15%).

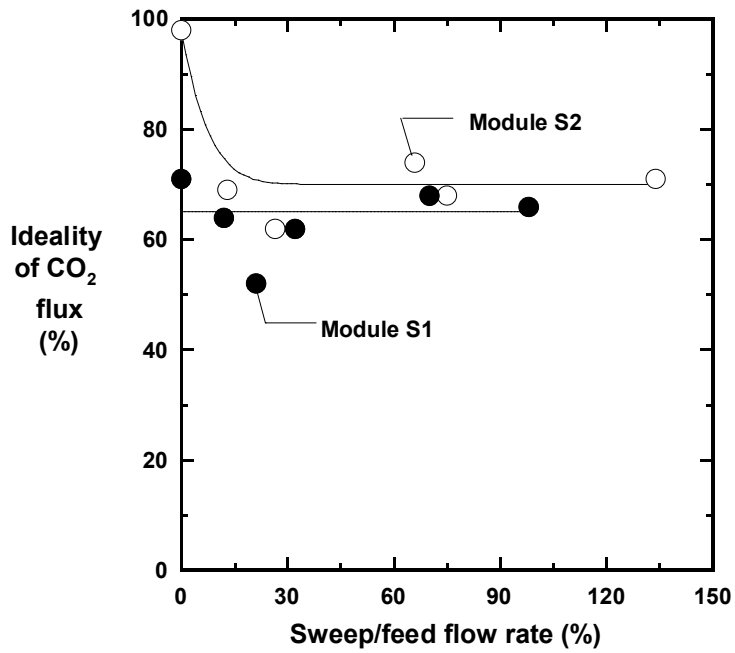

Figure 13. Comparison of sweep efficiency (characterized by ideality of CO_2 flux) in modules S1 and S2. Both were operated with a feed pressure of 35 psia and a feed stream containing about 10% CO_2 and the balance N_2. Module S1 was tested with a feed flow rate of 15 slpm, while module S2 had a feed flow rate of 36 slpm. The lines are to guide the eye.

Based on the results in Figure 13, our efforts to improve the countercurrent flow pattern and to lower pressure drops in module S2 do not correspond to significantly better transport performance. This result suggests that under the experimental pressure conditions other factors, such as concentration polarization, are more important as limiting factors on membrane performance.

To investigate whether feed side concentration polarization impacts CO_2 flux in a countercurrent/sweep module, we tested module S2 with different feed flow rates. Typically, increasing the feed flow rate promotes good mixing in the flow channel, and reduces the boundary layers associated with concentration polarization. Figure 14 compares the ideality of CO_2 flux in module S2 for two different feed flow rates, 36 slpm and 96 slpm. In general, the ideality falls within the range between 60% and 80%. It seems that the feed flow rate in the studied range does not have a significant effect on the performance of this countercurrent/sweep module. This result indicates that there is negligible concentration polarization on the feed side of the membrane. It seems much more likely that there is concentration polarization on the permeate side of the membrane where the sweep gas must mix with the permeating flue gas in the porous membrane substructure. Future optimization work will investigate the impact of better mixing in the permeate side flow channel.

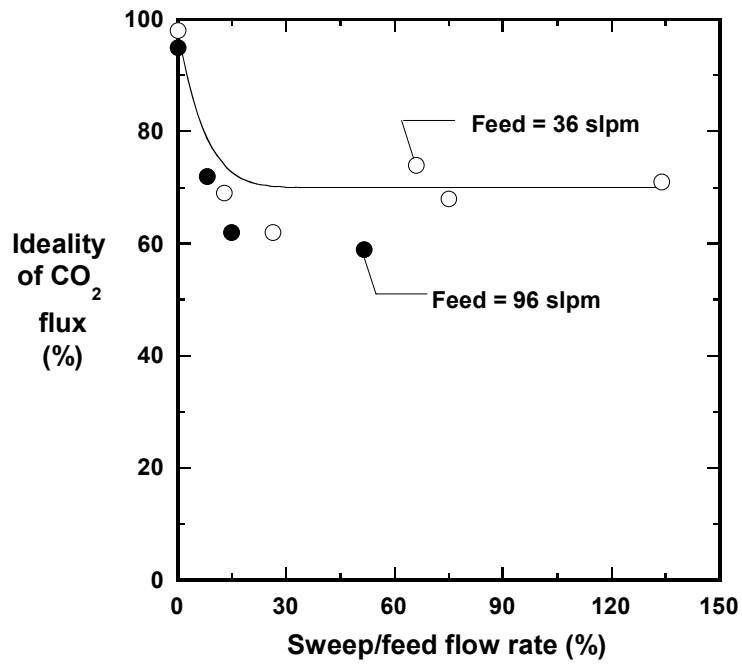

Figure 14. Ideality of CO_2 flux in module S2. Feed gas contained ~10% CO_2 and the balance N_2 at a feed pressure of 35 psia.

A Comparison of Feed and Permeate Channel Pressure Drop in Modules S1 and S2

Gas flow through a membrane module from feed-to-residue or sweep-to-permeate inevitably leads to a decrease in pressure. Due to the large gas volumes being processed in flue gas applications, it is critical to minimize the pressure drop (or energy loss) for gas flowing through membrane modules. Pressure drops in modules are often affected by feed and permeate spacer characteristics, as discussed previously in Task 3.

Figures 15(a-d) compare pressure drop values in the feed and permeate streams of modules S1 and S2. Pressure drop in the feed equals the difference between the feed inlet pressure of the module and the residue stream pressure exiting the module; the pressure drop in the permeate is the pressure difference between the sweep entering the permeate side of the module and the combined sweep and permeate stream exiting the module. All measurements were performed in a single-pass manner, and pressure drop was measured using a differential pressure gauge.

Compared to module S1, module S2 has

- a much lower feed side pressure drop [compare Figures 15(a) and 15(c)] and
- a much lower permeate pressure drop [compare Figures 15(b) and 15(d)].

These results show that while the modifications made in module S2 had only a small impact on CO_2 flux performance, they substantially improved the module flow characteristics. Low feed-to-residue and sweep-to-permeate module pressure drops are critical to minimize the energy burden on the feed side blower/compressor and the permeate side vacuum pump. The

improvements made in module S2 show that this module is close to meeting the desired targets for installation on a full-scale flue gas system.

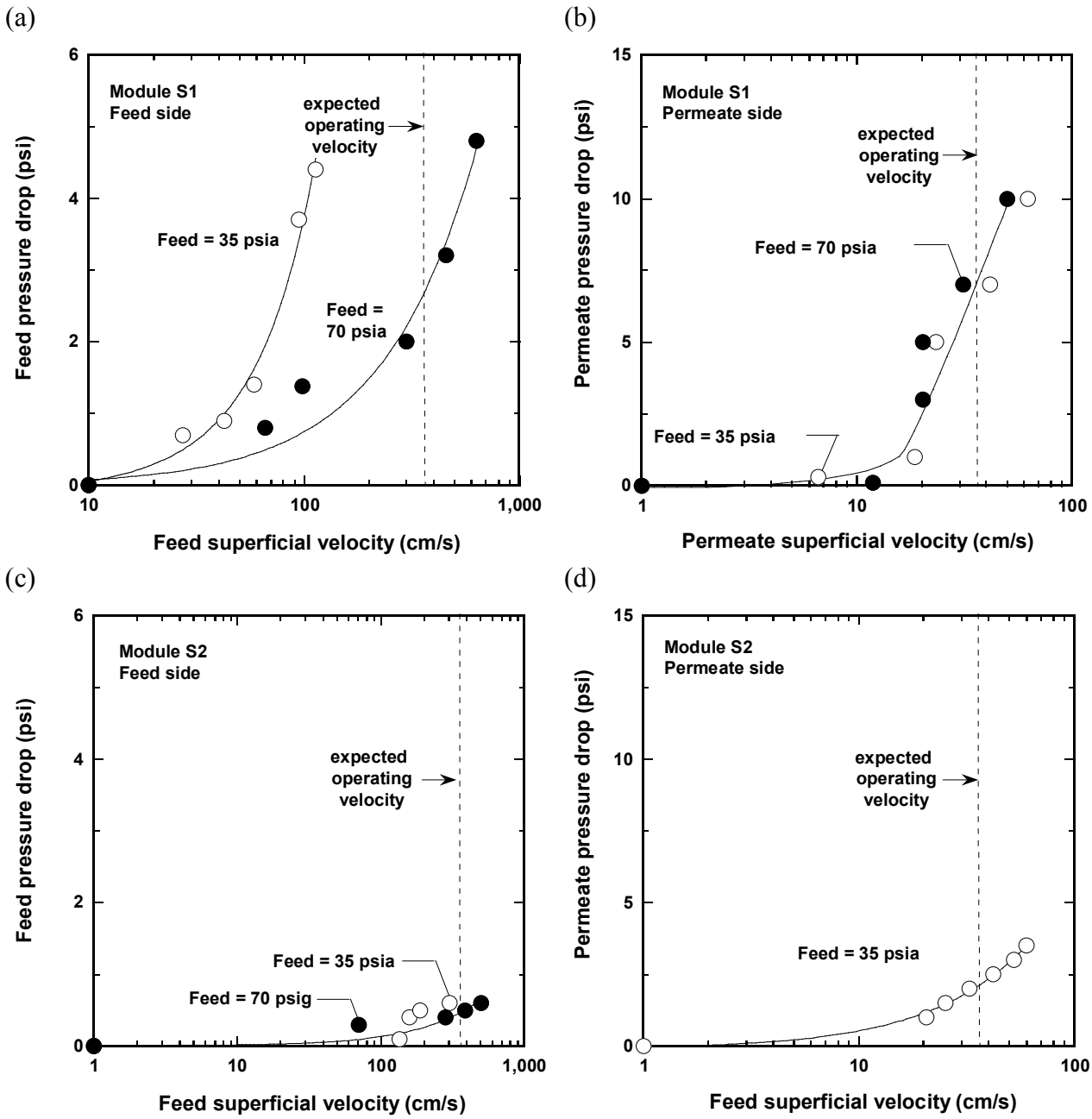

Figure 15. Comparison of pressure drop characteristics in modules S1 and S2. (a) Feed side pressure drop in module S1; (b) permeate side pressure drop in module S1; (c) feed side pressure drop in module S2; and (d) permeate side pressure drop in module S2. Superficial velocity is defined as gas flow (cm^2(STP)/s) per cm^2 of cross-sectional area. The dotted lines represent the anticipated superficial velocity of the process design.

The dotted lines in the figures represent the anticipated operational superficial velocities (375 cm/s for the feed side and 40 cm/s for the sweep side) in the actual flue gas application. That is, this is the expected flow velocity in a full-scale module operating on a real-world flue gas CO_2 capture system. Under these expected flue gas operating conditions, module S2 has a feed-to-residue pressure drop of less than 1 psi, which is low enough to cause minimal efficiency loss. The pressure drop on the permeate side is significantly higher and will detrimentally impact membrane performance. Potential solutions to this problem include the use of thicker or more open permeate spacers. Calculations based on the spacer materials studied in Task 3 show that the required pressure drops can be achieved. Details of this analysis will be described in our next report.

Task 5 Summary

To summarize the activities in this project task to date, a cross-flow module (C1) and two countercurrent/sweep modules (S1 and S2) have been made and extensively tested. The following conclusions can be drawn.

1. A cross-flow module for CO_2 separation, based on MTR's sequestration membrane, has been successfully designed and fabricated. CO_2/N_2 separation performance is consistent with the expected performance generated from ChemCAD simulations.
2. Using a sweep gas in countercurrent/sweep modules can increase CO_2 flux through the membrane by up to 20 times compared to cross-flow, depending on the feed pressure and module design.
3. Countercurrent/sweep module S2 has a better design than module S1. Compared to module S1, module S2 has much lower pressure drops in the feed and the permeate streams and better membrane packing density. CO_2 flux through the membrane in module S2 is slightly higher than that in module S1. For example, at a sweep/feed flow rate of 60%, CO_2 flux through the membrane is 2.0 slpm/m^2 in module S2 and 1.7 slpm/m^2 in module S1.
4. The ideality of CO_2/N_2 separation performance in both countercurrent/sweep modules is around 60-80%. There is still room for improvement in the design of countercurrent/sweep modules.

% Task 5 completed: 70%.

Task 6. Process Designs and Technical/Economic Analysis

The Limitations of Single-Stage Membrane Designs

An important, often overlooked, aspect of research on using membranes to capture CO_2 from flue gas is process design. Frequently, literature sources focus on the simplest possible membrane designs, such as those illustrated in Figure 16. In these single-stage membrane processes, flue gas is fed to a membrane module and a pressure driving force is generated by either (a) compression on the feed side or (b) a vacuum on the permeate side of the membrane. Calculations show that the required energy is considerably lower for the vacuum process because the vacuum only has to pump roughly 10% of flue gas that permeates the membrane

(largely CO_2), whereas a feed compressor pressurizes all of the flue gas (CO_2 plus the bulk N_2). While the vacuum process uses less energy than feed compression, it requires a much larger membrane area because the pressure difference across the membrane is small.

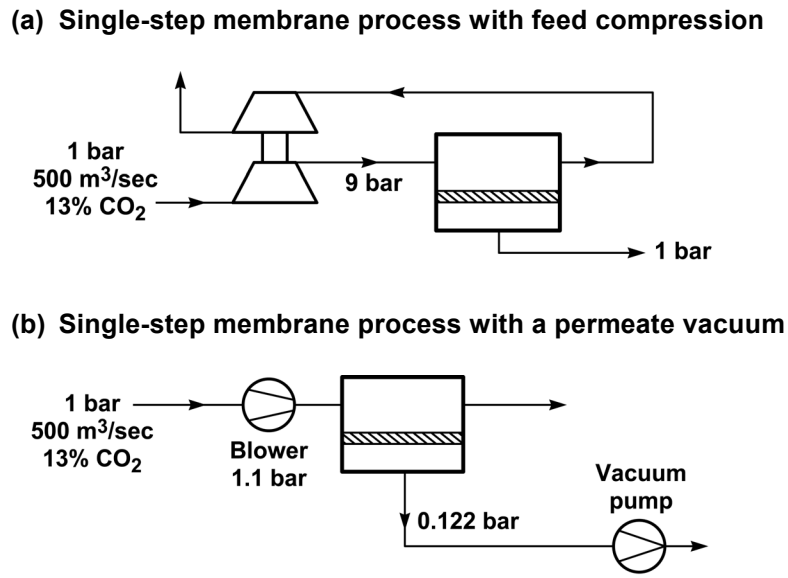

Figure 16. Single-step membrane processes to capture CO_2 in flue gas using (a) feed compression and (b) permeate vacuum at a 600 MW power plant. For (a) the membrane area is 590,000 m^2 and the power is 104 MW; for (b) the area is 4.8 million m^2 and the power is 68 MW.

In addition to large membrane area or power requirements, single-stage membrane designs are unable to produce high-purity CO_2 *combined* with high CO_2 recovery. In fact, a single-stage membrane process alone cannot produce high-purity CO_2 in the permeate with 90% CO_2 recovery, regardless of the membrane selectivity. This is because the system performance is limited by the pressure ratio across the membrane.

The importance of pressure ratio in the separation of gas mixtures can be illustrated by considering the separation of a gas mixture with component concentrations c_{i_o} and c_{j_o} at a feed pressure of p_o. A flow of component across the membrane can only occur if the partial pressure of component i on the feed side of the membrane, $c_{i_o} p_o$, is greater than the partial pressure of component i on the permeate side of the membrane, $c_{i_l} p_l$. That is, permeation occurs if $c_{i_o} p_o > c_{i_l} p_l$. It follows that the maximum separation achieved by the membrane can be expressed as

$$\frac{c_{i_l}}{c_{i_o}} \leq \frac{p_o}{p_l} \tag{3}$$

This means that the separation achieved can never exceed the pressure ratio of p_o / p_l, no matter how selective the membrane. In practical separation applications, the pressure ratio across the membrane is usually between 5 and 15. Higher pressure ratios can be achieved by using larger

compressors on the feed gas or larger vacuum pumps on the permeate, but the capital and energy cost of this equipment limits the practical range.

An example of the impact of pressure ratio on membrane separations is the membrane vacuum process shown in Figure 16(b). In this case, the feed-to-permeate pressure ratio is 10 (1.1 bar/0.11 bar). Under these conditions, the difference in performance for a membrane with a selectivity of 50 or one with selectivity of 500 is small. This point is illustrated in Figure 17 which shows the permeate CO_2 concentration as a function of permeate pressure for membranes with these selectivities. In these calculations, the CO_2 recovery is fixed at 90%.

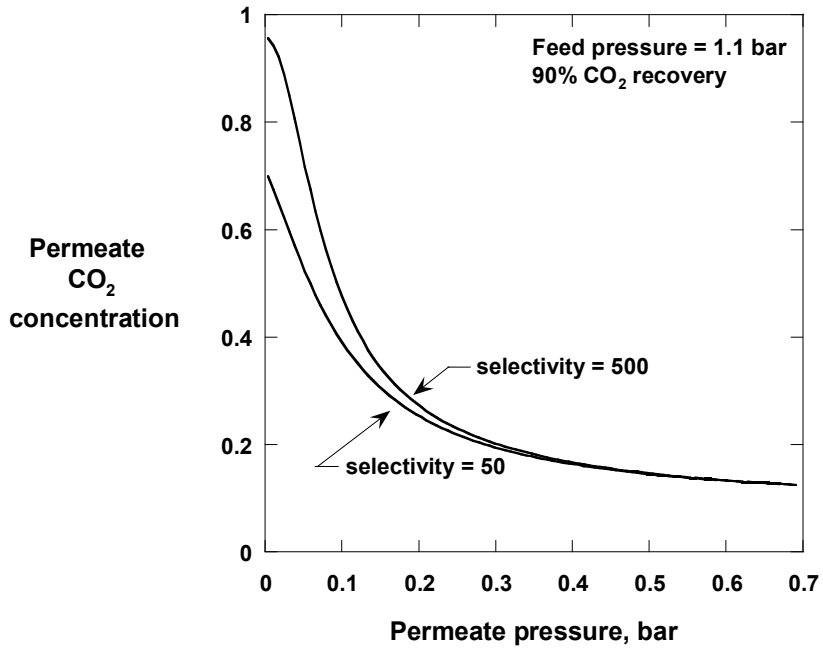

Figure 17. Calculated permeate CO_2 concentration as a function of permeate pressure for membranes with a CO_2/N_2 selectivity of 50 and 500. CO_2 recovery was fixed at 90%.

Because of pressure ratio limitations, the difference in CO_2 permeate concentration for the two membranes is small when the permeate pressure is 0.1 bar or greater. The higher selectivity membrane will only improve performance if the pressure ratio is increased by increasing the feed pressure or reducing the vacuum pressure. Both of these approaches increase capital and energy costs in an unacceptable manner. We make this point because there is a widespread belief that higher selectivity membranes are required for a useful CO_2 separation membrane. In fact, the point of diminishing returns is reached at a CO_2/N_2 selectivity of 30 to 50 (see Figure 21), or about 3 times the normal maximum practical pressure ratio.

For the reasons given above, a multi-step or multi-stage membrane design is required to achieve the desired CO_2 recovery and purity.

Two-Step Membrane Design With Countercurrent Sweep

A number of different multi-stage and multi-step designs were considered to identify an efficient membrane process for carbon dioxide capture from flue gas. The objective of these studies was to identify a membrane design that would minimize the energy and capital cost of a CO_2 capture process. Specifically, the targets were a process that would capture 90% of the CO_2 in flue gas and deliver high-purity liquid CO_2 ready for sequestration, while using less than 20% of the power plant energy and providing a CO_2 capture cost of less than \$40/ton CO_2.

Our current best design is based on the process flow scheme shown in Figure 1, and repeated for convenience in Figure 18. In this approach, a vacuum pump is used on the permeate side of the first membrane step. As discussed above, because the volume of the permeate gas (stream ②) passing through the vacuum pump is only a fraction of the volume of the flue gas (stream ①), the power used by the vacuum pump is much smaller than the power consumed by compressing the feed gas. This first membrane unit only removes a portion of the CO_2 in flue gas, to reduce the membrane area and energy required in this step. The residue gas leaving the first membrane unit (stream ③) still contains 7.4% CO_2. This gas passes on one side of a second membrane unit that has countercurrent/sweep configuration. The feed air to the boiler (stream ④) passes on the other side of this membrane as a sweep stream. Because of the difference in concentration of CO_2, some CO_2 passes through the membrane and is recycled with the feed air to the boiler (stream ⑤). The treated flue gas (stream ⑥) leaving the countercurrent membrane unit contains only 1.8 % CO_2 and is vented – 90% CO_2 removal is achieved.

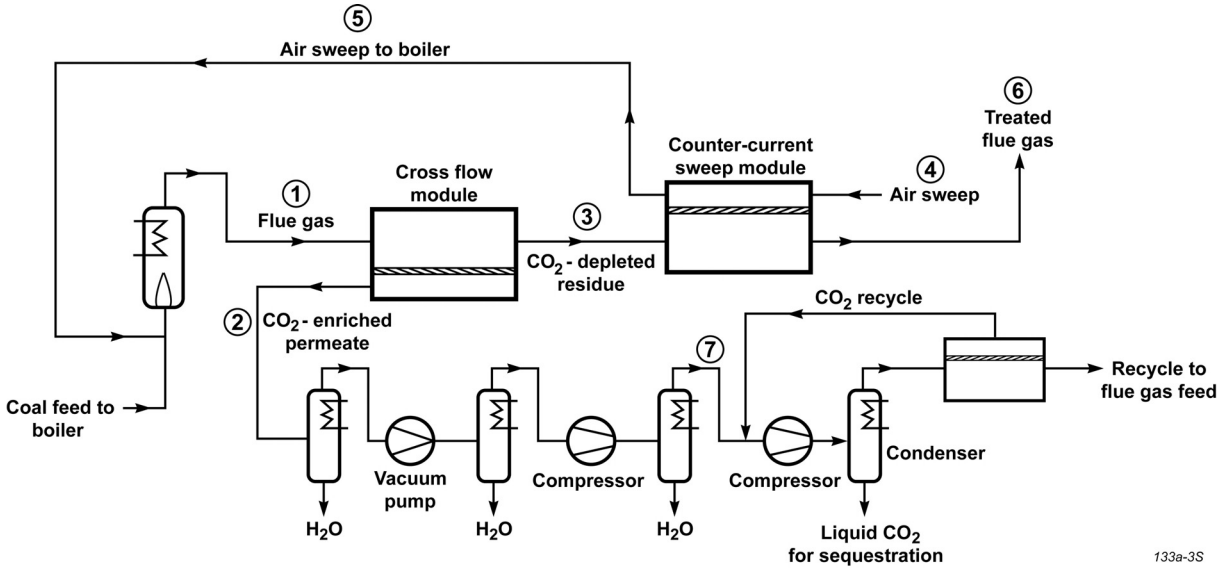

Figure 18. Flow diagram of the proposed membrane process to capture and sequester CO_2 in flue gas from a coal-fired power plant. Optimization and sensitivity studies conducted in Task 6 were based on this design.

Compared to the simple designs discussed above, the two-step design with countercurrent sweep offers a number of benefits:

- Lower energy use because the countercurrent module design uses incoming combustion air to generate driving force for CO_2 separation;
- Lower membrane area because the CO_2 recycled in the combustion air stream increases the CO_2 partial pressure gradient in the first membrane step;
- Greater than 99% recovery of water in the flue gas, and consequently, no reheating of the flue gas is required to prevent condensation in the stack;
- A high efficiency compression-condensation-membrane loop that delivers >99% liquid CO_2 ready for sequestration.

Using the process shown in Figure 18, sensitivity studies were conducted to examine the effect of various design parameters on the efficiency of CO_2 capture. There are a number of metrics that can be used to evaluate the efficiency of a CO_2 capture design including the capital cost of the capture equipment, the parasitic energy requirement for capture, the increase in the cost of electricity due to capture, and the overall cost of capture per ton of CO_2 sequestered. These measures of capture efficiency are subject to a number of assumptions that are necessary to estimate their values. As a consequence, values quoted in literature sources can vary considerably. To establish a baseline, the assumptions used in our calculations are summarized in Table 3.

The compressor/pump efficiencies and cost factors are today's values for commercial gas separation systems. The base-case membrane cost of $\$150/m^2$ is lower than the range for today's commercial gas separation systems ($\$500$-$\$750/m^2$). However, industrial gas separation systems operate at high pressure with corrosive gases. Consequently, they use expensive steel housings and tubing. Industrial gas separation systems also tend to be more than an order of magnitude smaller than the proposed flue gas CO_2 capture system. In contrast, commercial reverse osmosis systems can be very large, with more than 1 million m^2 of membrane area – slightly larger than the membrane system needed to capture CO_2 from a 600 MW coal-fired power plant. These reverse osmosis systems benefit from economies of scale and low-pressure plastic components (housing, valves, tubing, etc), and accordingly, the average installed membrane cost is less than $\$50/m^2$. Because the flue gas membrane system will operate at low pressures and can use low-cost components, we believe low installed membrane costs, such as those found in the reverse osmosis industry, can be achieved. For the base case, we have used a conservative value of $\$150/m^2$.

The assumptions related to power plant operation and cost are standard values found in the literature.[4, 10] The power plant efficiency used (33.5%) is an average value for today's pulverized coal plants, most of which were built more than 30 years ago. It is envisioned that new super critical or ultra critical power plants will operate at efficiencies of 40-50%. These plants will generate less CO_2 per unit of power generation. As a result, smaller capture systems will be needed, and the effect of capture on the cost of electricity will decrease.

Table 3. Assumptions Used in Base Case Design Calculations.

Category	Value	Units
Compressor efficiency	0.80	-
Turbo expander efficiency	0.85	-
Vacuum pump efficiency	0.75	-
Compressor and turbo expander cost	500	$/kW
Membrane CO_2 permeance	1,000	gpu
Membrane CO_2/N_2 selectivity	50	-
Membrane cost	150	$/m^2
Membrane equipment installation factor	1.6	-
Capital depreciation/interest	20	%
Cost of power	0.04	$/kW
Capacity factor	85	%
Plant lifetime	25	years
Carbon content of coal (Illinois #6)	61	%
Average energy content of coal	22,500	BTU/kg
Average power plant efficiency	33.5	%

The cost to sequester CO_2, *CS* ($/ton CO_2), can be defined as the cost to operate capture and sequestration equipment divided by the quantity of CO_2 captured:

$$CS = \frac{P \times T \times E + 0.2 \times C}{F_{CO_2} \times T} \tag{4}$$

where *P* is the power required for capture and sequestration (kW), *T* is the plant annual operating time (h/y), *E* is the cost of electricity to run the capture and sequestration equipment ($/kWh), *C* is the capital cost of the capture equipment ($), and F_{CO_2} is the mass flow rate of sequestered CO_2 (ton/h). Typical *CS* values for conventional flue gas CO_2 capture technologies, such as amine scrubbing, are in the $40/ton CO_2 range. For the membrane process calculations described below, the *CS* values include compression to liquid CO_2.

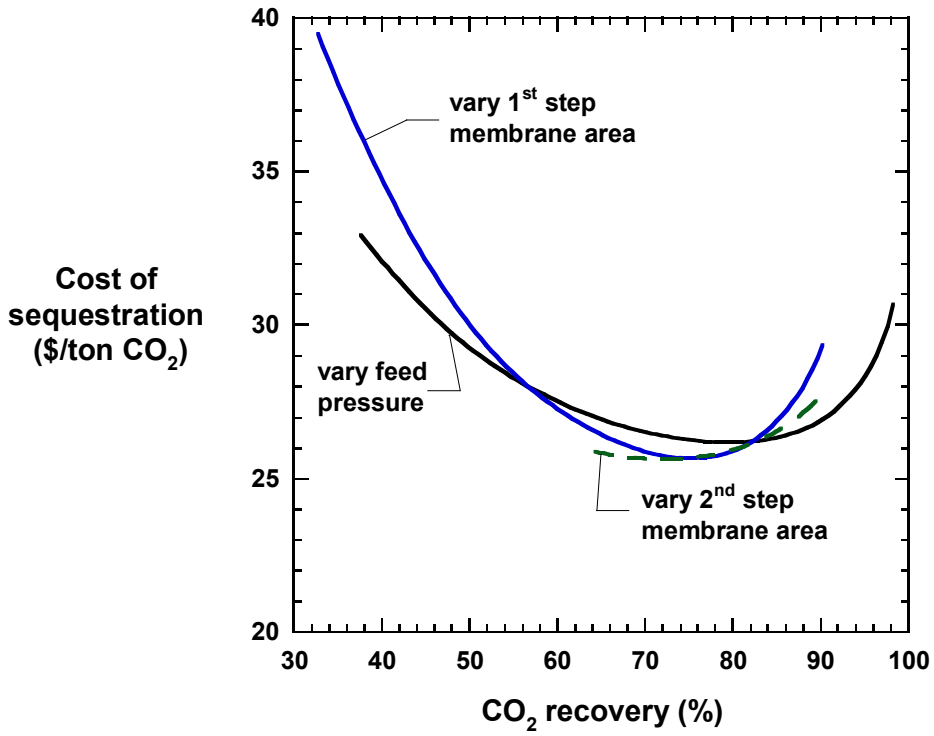

Figure 19. Cost of sequestration as a function of CO_2 recovery for the two-step countercurrent sweep membrane design. The CO_2 recovery was varied by changing either the feed pressure, the first step membrane area, or the second step membrane area as shown in the figure.

Figure 19 presents the cost of sequestration as a function of CO_2 recovery for the process design shown in Figure 18 where either the feed pressure, the first step membrane area, or the second step membrane area have been varied. The cost of sequestration initially decreases with increasing CO_2 recovery, reaches a minimum between 70 and 85 % recovery, and then increases sharply at higher recoveries. The curves have a similar shape regardless of the method of varying CO_2 recovery. A minimum in the sequestration cost occurs because of the competing effects of the factors that go into the cost of sequestration calculation. At low recoveries, the amount of CO_2 captured (the denominator in Equation 3) is small, while the capital investment (membrane area) and operating costs (power) – although relatively low – are not used efficiently. As CO_2 recovery increases, the membrane area and power increase, but more slowly than the increasing amount of CO_2 captured. As a result, the cost of sequestration decreases. At high CO_2 recoveries (>80%), relatively large increases in power or membrane area are required to obtain small increases in the amount of CO_2 captured. Consequently, the cost of sequestration increases sharply at these high CO_2 recoveries. The lowest sequestration cost is observed at a CO_2 recovery of 70 to 80%.

Figure 20 shows the effects of membrane and electricity costs on the cost of CO_2 sequestration. If the membrane cost can be reduced from the base case value of $150/m^2 to the current price of reverse osmosis membranes – $50/m^2 – the cost of sequestration drops significantly, especially at lower CO_2 recoveries. For example, at 70% CO_2 recovery, the cost of sequestration with

$150/m^2$ membranes is about $27/ton CO_2 compared to $19/ton CO_2 for $50/m^2$ membranes. The different shape of the curve for $50/m^2$ membranes in Figure 20(a) reflects the fact that the inefficient use of the membrane area at low recoveries is mitigated by the low cost of the membranes. In this case, power is the dominant factor in the cost calculation and as power requirements increase with increasing recovery, so does the cost of sequestration. For the low cost membranes, Figure 20(b) shows that if the cost of power is halved, the cost of sequestration decreases by slightly more than 20%.

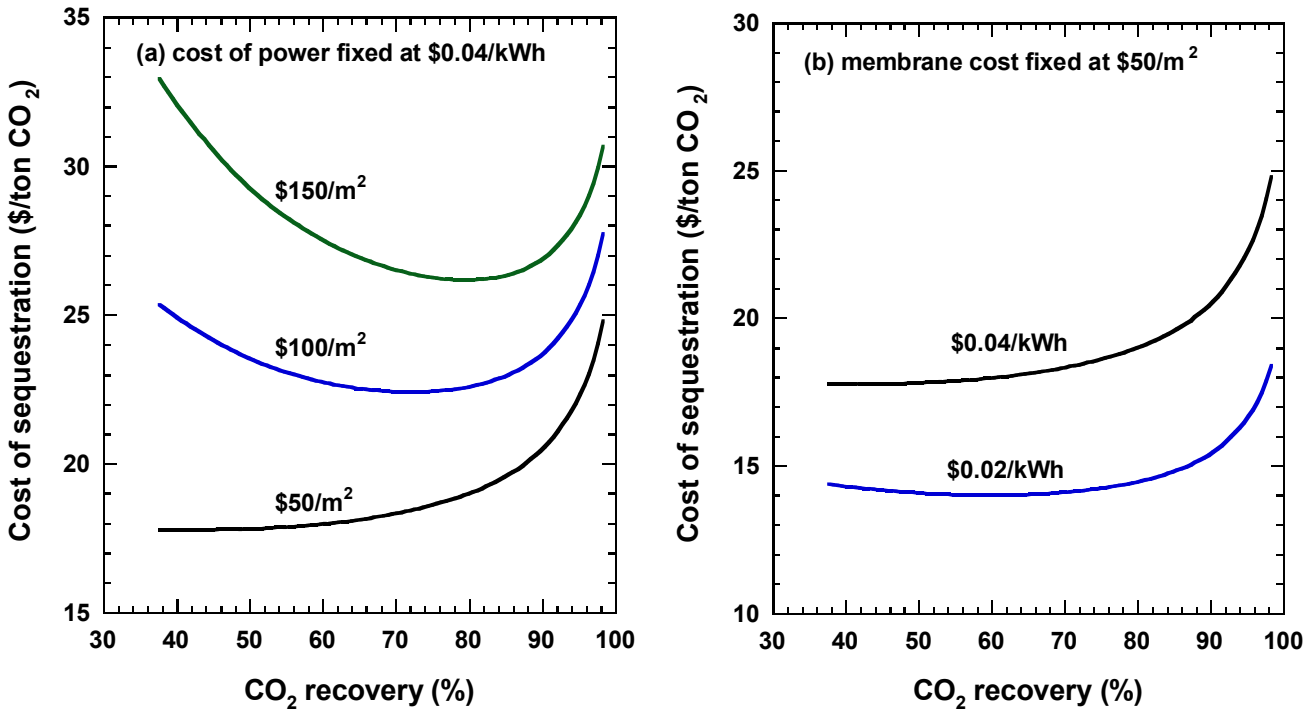

Figure 20. The cost of sequestration as a function of CO_2 recovery for (a) different membrane costs and (b) different electricity costs. Calculations are for the two-step countercurrent/sweep design shown in Figure 18.

Figure 21 shows the effects of membrane CO_2 permeance and CO_2/N_2 selectivity on the cost of sequestration for the two-step countercurrent/sweep process design. The calculations show that the cost of sequestration is a strong function of membrane selectivity at CO_2/N_2 selectivities of less than 30. For example, as the membrane CO_2/N_2 selectivity increases from 10 to 30, the cost of sequestration decreases from $38 to $28/ton CO_2 for a 1,000 gpu CO_2 membrane. However, at higher selectivities, the cost of sequestration is a weak function of selectivity. For instance, as the CO_2/N_2 selectivity increases from 30 to 100, the sequestration cost for the same membrane drops only from $28 to $26/ton CO_2.

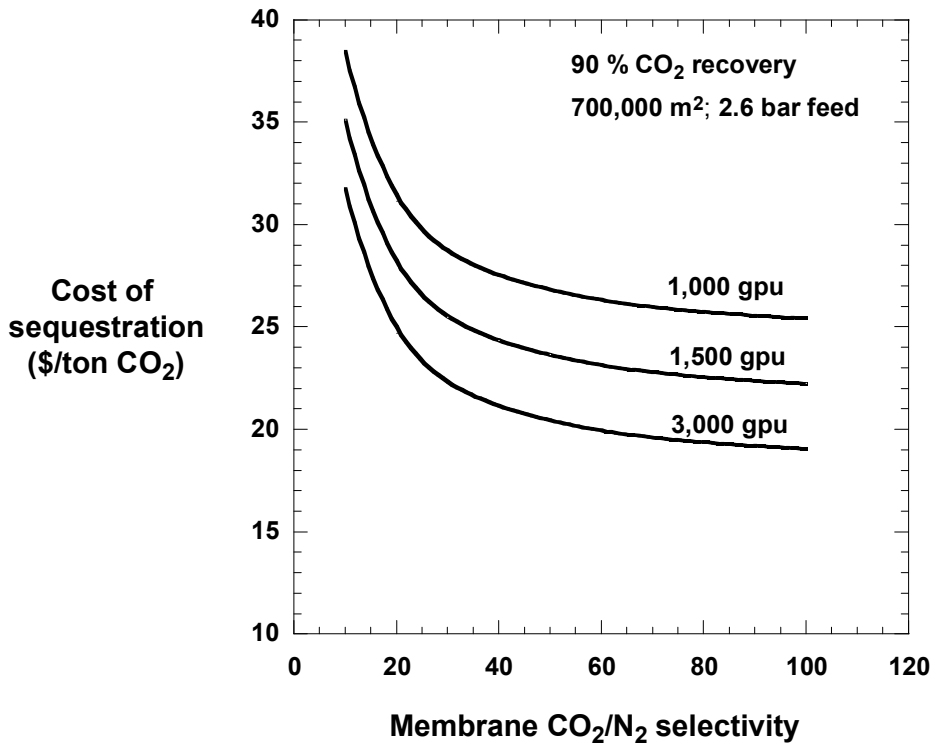

Figure 21. Effect of membrane CO_2 permeance and CO_2/N_2 selectivity on the cost of sequestration.

From the Figure 21 data, it appears that at CO_2/N_2 selectivities above 30, increases in membrane CO_2 permeance are more important than further increases in selectivity. This reflects the fact that in a real-world membrane process designed to treat flue gas, such as that shown in Figure 18, the membrane operates in a pressure-ratio-limited regime. Under these conditions, increasing membrane permeance will help reduce the required membrane area (and capital cost), but increasing selectivity has only a small impact on product purity (which affects power requirements and operating costs).

Future design work will continue to examine different process schemes with sensitivity studies such as those shown in Figures 19-21 to identify an optimized membrane process for capturing CO_2 in power plant flue gas.

% Task 6 completed: 50%.

CONCLUSIONS

Significant progress was made on technical objectives during the first six months of this project. The key accomplishments include:

- Membranes with transport properties better than the original project targets were developed. These membranes have CO_2 permeances approximately tenfold higher than commercial CO_2 membranes, and two- to three-fold higher than our baseline membrane properties used for the proposal design calculations.
- High permeance membrane formulations were successfully scaled up and produced on our commercial casting and coating equipment. Over 100 m^2 of membrane were prepared.
- Conventional cross-flow and novel countercurrent/sweep modules were successfully fabricated from high-CO_2-permeance membrane.
- A new mixed-gas test system was designed and built to allow parametric module testing under different sweep and non-sweep conditions.
- Mixed-gas module test data were collected that (a) confirm near-ideal performance of cross-flow vacuum operation and (b) demonstrate the effectiveness of sweep operation.
- Membrane process design studies indicate that CO_2 capture and liquefaction can be accomplished at \$20-\$30/ton CO_2. Enhanced membrane permeance or lower installed membrane cost can further improve the economics of CO_2 capture, while CO_2/N_2 selectivities of more than 30 produce little additional improvement in system performance due to pressure ratio limitations.

The membrane, module and design findings summarized above meet the requirements for three out of the four critical path milestones defined at the outset of this project. The remaining milestone is to complete a more rigorous technical and economic analysis of our best process design. This evaluation is ongoing and results will be included in future reports.

Based on these promising initial findings, we recommend a field site demonstration be conducted in the near future. Field tests are an invaluable way to investigate membrane system performance under real world conditions. Critical issues such as the impact of residual particulate matter or other contaminants in flue gas on the membrane system can best be addressed by working with real flue gas. Insights from such a test will also be useful for scale-up of low-cost module skid designs that will improve the competitiveness of CO_2 capture with membranes.

REFERENCES

1. J. T. Houghton, Y. Ding, D. J. Griggs, M. Noguer, P. J. van der Linden, X. Dai, K. Maskell and C. A. Johnson, *Climate Change 2001: The Scientific Basis*, Cambridge University Press, New York, p. 892 (2001).

2. M. I. Hoffert, K. Caldeira, G. Benford, D. R. Criswell, C. Green, H. Herzog, A. K. Jain, H. S. Kheshgi, K. S. Lackner, J. S. Lewis, H. D. Lightfoot, W. Manheimer, J. C. Mankins, M. E. Mauel, L. J. Perkins, M. E. Schlesinger, T. Volk and T. M. L. Wigley, "Advanced Technology Paths to Global Climate Stability: Energy for a Greenhouse Planet," *Science*, 298, (5595), 981-987 (2002).

3. J. Johnson, "Getting to Clean Coal," *C&E News*, p.20, February (2004).

4. *The Future of Coal – Options for a Carbon Constrained World*; MIT Interdisciplinary Study (2007).

5. A. B. Rao and E. S. Rubin, "Identifying Cost-effective CO_2 Control Levels for Amine-based CO_2 Captive Systems," *Ind. Eng. Chem. Res.*, 45, 2421-2429 (2006).

6. M. T. Ho, G. Leamon, G. W. Allinson and D. E. Wiley, "Economics of CO_2 and Mixed Gas Geosequestration of Flue Gas Using Gas Separation Membranes," *Ind. Eng. Chem. Res.*, 45, 2546-2552 (2006).

7. H. Lin, T. C. Merkel and R. W. Baker, "The Membrane Solution to Global Warming," presented at Sixth Annual Conference on Carbon Capture & Sequestration, Pittsburgh, PA (2007).

8. R. W. Baker, *Membrane Technology and Applications*, 2nd ed., John Wiley & Sons Ltd., Chichester, England, p. 544 (2004).

9. E. A. Mason and A. P. Malinauskas, *Gas Transport in Porous Media: The Dusty Gas Model*, Elsevier, Amsterdam, (1983).

10. C. Hendriks, *Carbon Dioxide Removal from Coal-Fired Power Plants*, Kluwer Academic Publishers, Dordrecht, p. 233 (1994).

Appendix A. Cost Plan and Status Report

Baseline Reporting Quarter	YEAR 1. Start: 4/1/07 End: 3/31/08				YEAR 2. Start: 4/1/08 End: 3/3/109			
	Q1	Q2	Q3	Q4	Q5	Q6	Q7	Q8
Baseline Cost Plan (from SF424A)								
Federal Share	$ 99,422	$ 99,423	$ 99,422	$ 99,423	$ 97,644	$ 97,644	$ 97,644	$ 97,644
Non-Federal Share	$ 24,856	$ 24,855	$ 24,856	$ 24,855	$ 24,411	$ 24,411	$ 24,411	$ 24,411
Total Planned (Federal and Non-Federal)	$ 124,278	$ 124,278	$ 124,278	$ 124,278	$ 122,055	$ 122,055	$ 122,055	$ 122,055
Cumulative Baseline Cost	$ 124,278	$ 248,556	$ 372,834	$ 497,112	$ 619,167	$ 741,222	$ 863,277	$ 985,332
Actual Incurred Costs								
Federal Share	$ 182,917	$ 243,029						
Non-Federal Share	$ 24,184	$ 14,620						
Total Incurred Costs - Quarterly (Federal and Non-Federal)	$ 207,101	$ 257,649						
Cumulative Incurred Costs	$ 207,101	$ 464,750						
Variance								
Federal Share	$ (83,495)	$ (143,606)						
Non-Federal Share	$ 672	$ 10,235						
Total Variance - Quarterly (Federal and Non-Federal)	$ (82,823)	$ (133,371)						
Cumulative Variance	$ (82,823)	$ (216,194)						

The variance in spending from the original cost plan during the first two project quarters resulted from a combination of factors including unexpectedly rapid progress on project tasks, very promising results, and the availability of resources during this period. With most of the project tasks now completed, we expect spending in the 3rd and 4th quarters to be significantly lower than the original cost plan.

Appendix B. Critical Path Project Milestones

Critical Path Project Milestone Description	Project Duration- 24 months Start: 4/1/07 End: 3/31/09								Planned Start Date	Planned End Date	Actual Start Date	Actual End Date	Comments (notes, explanation of deviation from baseline plan)
	Project Year 1				Project Year 2								
	Q1	Q2	Q3	Q4	Q1	Q2	Q3	Q4					
Begin fabrication of sweep flow modules after completion of sufficient membrane work	xxx	xxX							3QFY07	4QFY07	3QFY07	4QFY07	Finished on time
Select membrane materials and select optimum membrane structure. Initiate activities for construction of sweep module test skid.	xxx	xxx	xxx	xxX					3QFY07	2QFY08	3QFY07	4QFY07	Finished ahead of schedule
Initiate module parametric tests and initiate process to optimize modules. This milestone marks readiness to begin design studies			xxx	xxx	xxx	xxX			1QFY08	4QFY08	3QFY07	4QF07	Finished ahead of schedule
Initiate economic analysis and process design preparation. Initiate preparation of Final Report.					xxx	xxx	xxx	xxX	3QFY08	2QFY09	4QFY07		Started ahead of schedule

First Project Year:
1st Project Quarter = April May June 2007 = 3rd Quarter FY07
2nd Project Quarter = July Aug Sep 2007 = 4th Quarter FY07*

3rd Project Quarter = Oct Nov Dec 2008 = 1st Quarter FY08
4th Project Quarter = Jan Feb Mar 2008 = 2nd Quarter FY08*

Second Project Year:
5th Project Quarter = Apr May Jun 2008 = 3rd Quarter FY08
6th Project Quarter = Jul Aug Sep 2008 = 4th Quarter FY08*

7th Project Quarter = Oct Nov Dec 2009 = 1st Quarter FY09
8th Project Quarter = Jan Feb Mar 2009 = 2nd Quarter FY09**

* critical path milestone/reports due;
** final milestone and report due