Project Title:

Development of a Dry Sorbent-Based Post Combustion CO_2 Capture Technology for Retrofit in Existing Power Plants

Technology Area:	**Technology Maturity:**
Post-Combustion Sorbents	Bench-Scale, 0.24 Tonnes/Day

Primary Project Goal:

Develop and test a commercially viable carbon dioxide (CO_2) capture process from a coal-fired power plant flue gas, with CO_2 and water vapor present, by utilizing a dry sodium carbonate (Na_2CO_3) sorbent.

Technical Goals:

- Determine the optimal process configuration for the dry carbonate process.
- Construct and demonstrate a bench-scale CO_2 capture process using Na_2CO_3.
- Construct and demonstrate a pilot-scale, dry carbonate process that captures 0.9 tonnes of CO_2/day (1 ton of CO_2/day).
- Demonstrate the long-term chemical and mechanical stability of the sorbent.
- Update the economic analyses of the CO_2 sorbent capture process.
- Develop a commercialization plan for instituting the CO_2 capture process.

Technical Content:

In an effort to develop a pre-pilot scale facility, Research Triangle Institute (RTI) has been collecting data needed for designing, constructing, and operating the dry sorbent-based capture unit. RTI has designed and constructed a bench-scale heat transfer evaluation unit, shown in Figure 1, which is used to experimentally determine realistic gas and solid circulation rates and overall heat transfer coefficients for new reactor designs.

A schematic diagram of the process is shown in Figure 1.

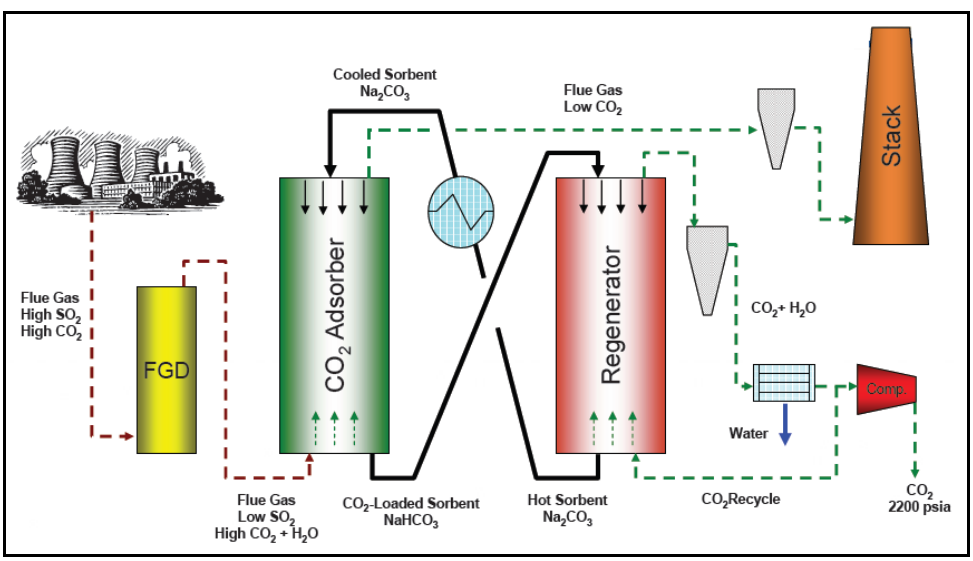

Figure 1: Schematic Diagram of CO_2 Capture Process

The CO_2 capture unit is located after the wet flue gas desulfurization (FGD) unit. The Na_2CO_3 sorbent reacts with the CO_2 and water (H_2O) located in the gas stream through a cyclic temperature swing cycle by adsorbing the CO_2 and H_2O at 60°C and releasing the constituents at 120°C during the sorbent regenerating stage. Considering the high exothermic heat of absorption (3.08 MJ/kg), significant cooling fluid is required to maintain the adsorption temperature at the desired value.

Figure 2: Lab-Scale CO_2 Absorption Reactor Skid

Utilizing the information gathered from the bench-scale unit, as well as the lab-scale unit shown in Figure 2, RTI has developed engineered sorbents that exhibit improved CO_2 capture rate and physical characteristics (e.g., attrition resistance, fluidizibility, and density) over the supported (multi-layer) sorbents. These improvements will have a significant impact on a commercial, dry carbonate system by lowering the solids handling requirements and minimizing the heating and cooling duties in a commercial process. A long-term, multi-cycle testing of these sorbents to demonstrate chemical stability has been undertaken. Initial results indicate that the engineered sorbents are highly stable in the presence of contaminates such as hydrochloric acid (HCL), nitrous oxides (NO_X), H_2O, and oxygen (O_2). While sulfur dioxide (SO_2) forms irreversible chemical bonds to the sorbent, it is considered to be a minor issue, considering the rate of attrition is generally greater than the rate of deactivation due to SO_2.

The heat transfer experiments will be conducted in a fluidized bed contactor, as shown in Figure 2. The conveyors (one heated, the other cooled) will be used to move the Na_2CO_3 through the fluidized bed to introduce a simulated flue gas (from coal or natural gas) to the sorbent. The instrument is used to analyze the adsorption effectiveness and the attrition rate of the Na_2CO_3 sorbent. Data from the fluidized bed will be used to validate and develop the computational fluid dynamic (CFD) model called MFIX.

Table 1: Physical Properties of Sodium Carbonate Sorbents

Property	Value
Bulk density	1.0 – 1.1 g/mL
Average particle size	65 – 75 µm
Surface area	100 – 120 m^2/g
Physical strength (AR)	0.77
Na_2CO_3 content	10 – 40 wt%
Heat of absorption	3.08 MJ/kg
Regeneration energy	3.08 MJ/kg

Some physical properties of the sorbent are provided in Table 1.

As seen in the aforementioned table, the theoretical maximum CO_2 loading for the sorbent is ~40 wt%. While RTI has achieved loading as high as 30 wt%, it requires a cycle time much greater than would be practical. Allowing only 30 minutes per cycle phase results in loading capacities of ~20-25%.

Technology Advantages:

- Lower capital and operating costs for CO_2 removal.
- Sorbent is inexpensive and easy to acquire (~$200/ton).
- Sorbent is non-hazardous, non-toxic, and does not produce hazardous waste.

R&D Challenges:

- Circulation of solids may be problematic.
- The reaction of Na_2CO_3 with H_2O is highly exothermic and requires effective heat transfer.
- Removal of CO_2 requires equimolar amounts of H_2O.
- Irreversible reactions of Na_2CO_3 with SO_2 and HCl during process conditions.
- Raw Na_2CO_3 is not a physically strong material leading to high attrition rates.
- Raw Na_2CO_3 agglomerates upon contact with condensed H_2O.

Results To Date/Accomplishments:

- Constructed a heat transfer evaluation system used to evaluate the hydrodynamics and heat transfer characteristics of the reactor designs.
- Constructed a packed-bed reactor system to demonstrate sorbent stability over many adsorption and regeneration cycles and provide insight into reaction kinetics.
- Validated the operation of a bench-scale, coupled cold-flow system and collected data on gas-solid contactor bed height control, range of operability, sorbent bed densities, bed void volumes, and fluidization characteristics.
- Measured the heat transfer limitations of the existing screw conveyor system and determined that the screw conveyors cannot be used for sorbent regeneration in a 1-ton/day CO_2 capture pre-pilot system.
- Developed updated process simulations for the new dry carbonate process design using ASPEN Plus.

Next Steps:

- Continue design and construction of the pre-pilot CO_2 capture system.
- Continue sorbent development and identify promising sorbent candidates.
- Conduct process simulation work and preliminary economic analysis of the new dry carbonate process.
- Perform a detailed technical and economic analysis of the dry carbonate process.
- Evaluate the hydrodynamic and heat transfer characteristics of the reactor designs using the heat transfer evaluation system.
- Demonstrate long-term, multi-cycle stability of the engineered sorbent using the packed-bed reactor.

Available Reports/Technical Papers/Presentations:

Carbon Dioxide Capture from Flue Gas Using Dry Regenerable Sorbents – Final Report – January 2009.

The Dry Carbonate Process: Carbon Dioxide Recovery from Power Plant Flue Gas - CO_2 Capture Technology for Existing Plants R&D Meeting – March 2009.

The Dry Carbonate Process: Carbon Dioxide Recovery from Power Plant Flue Gas – 7th Annual Conference on Carbon Capture and Sequestration in Pittsburgh, Pennsylvania – May 2008.

The Dry Carbonate Sorbent Technology for CO_2 Removal from Flue Gas of Existing Coal-Fired Power Plants - Power Plant Air Pollutant Control "Mega" Symposium in Baltimore, Maryland – August 2008.

Carbon Dioxide Capture from Flue Gas Using Dry Regenerable Sorbents Fact Sheet – April 2008.

Development of a Dry Sorbent-Based Post Combustion CO_2 Capture Technology for Retrofit in Existing Power Plants Fact Sheet – April 2008.

Carbon Dioxide Capture from Flue Gas Using Dry Regenerable Sorbents – Topical Report – November 2004.

Contract No.: DE-FC26-07NT43089	**NETL Project Manager:** José Figueroa Jose.Figueroa@NETL.DOE.GOV
Principal Investigator: Thomas Nelson Research Triangle Institute tnelson@rti.org	**Partners:** Arcadis EPA ADA-ES EPRI BOC Süd-Chemie, Inc. Nexant