Post-Combustion CO_2 Capture for Existing PC Boilers by Self-Concentrating Absorbent

Liang Hu (3H Company)
and
Gerald Choi (Nexant, Inc.,)

2011 NETL CO_2 Capture R&D Technology Meeting
August 22- 26, 2011

Company Background

3H Company –

- *A CO_2 capture technology startup company located in Lexington, KY*
- *Core mission is to develop and commercialize its patented self-concentrating absorbent technology for post-combustion CO_2 capture application*

Nexant, Inc. –

- *An engineering and consultant company, headquartered in San Francisco, CA, with corporate, representative, and project offices around the world*
- *Subcontracted to 3H Company to provide project management, engineering system analysis, and techno-economic evaluation services to the project*

Project Overview

- *Project funding under DOE Agreement DE-FE0004274*
- *Total project cost - $3.5MM over three years with 21.5% cost share*
- *Contract award executed in April 2011*
- *Project participants*
  - *3H Company, LLC*
  - *LG&E and KU Energy LLC*
  - *EPRI*
  - *Nexant*
- *Project objective: perform bench-scale R&D to demonstrate and develop 3H's 'Self Concentrating Absorbent Process' for post-combustion CO_2 capture from existing PC power plant flue gas meeting DOE's goals of 90% removal, with no more than a 35% increase in the cost of electricity*

3H Self-Concentrating Absorbent Technology - Concept

- *Patented process*
- *Designed absorbent/solvent systems which phase separate upon absorption with CO_2*
- *Only the CO_2 rich phase sent onto regeneration, resulting in:*
  - *Significant reduction in solvent recirculation, thus heat of regeneration*
  - *Significant increase in CO_2 capture process efficiency*
  - *Potential capital cost savings*

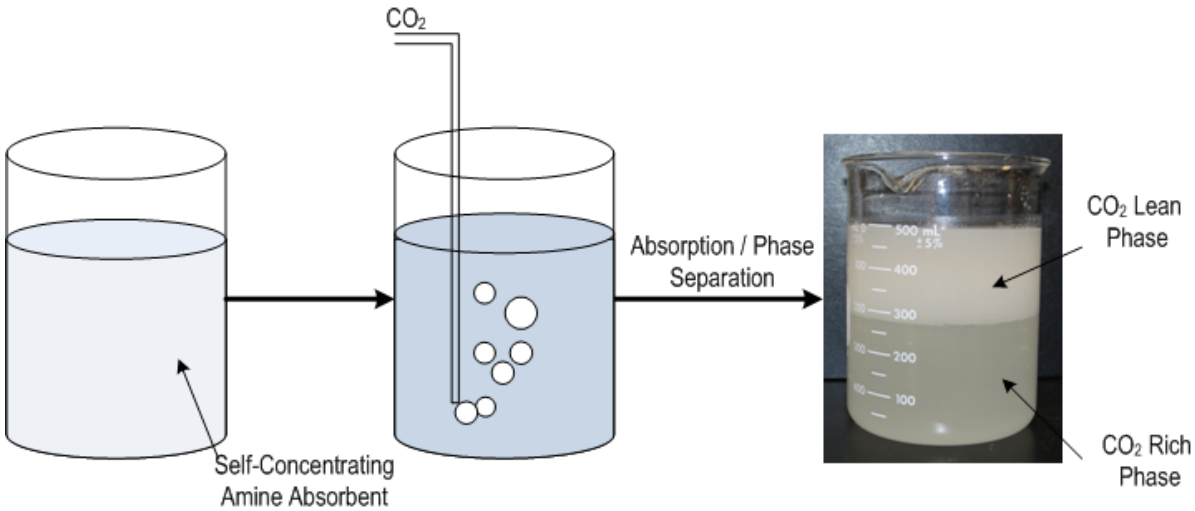

3H Self-Concentrating Absorbent Technology - Concept

- *Overall process flow scheme is expected to be similar to that of a conventional MEA process*
- *Any lessons learned from post-combustion CO_2 capture retrofitting or integration of a MEA process, onto an existing power plant can be applied to the 3H process as well*

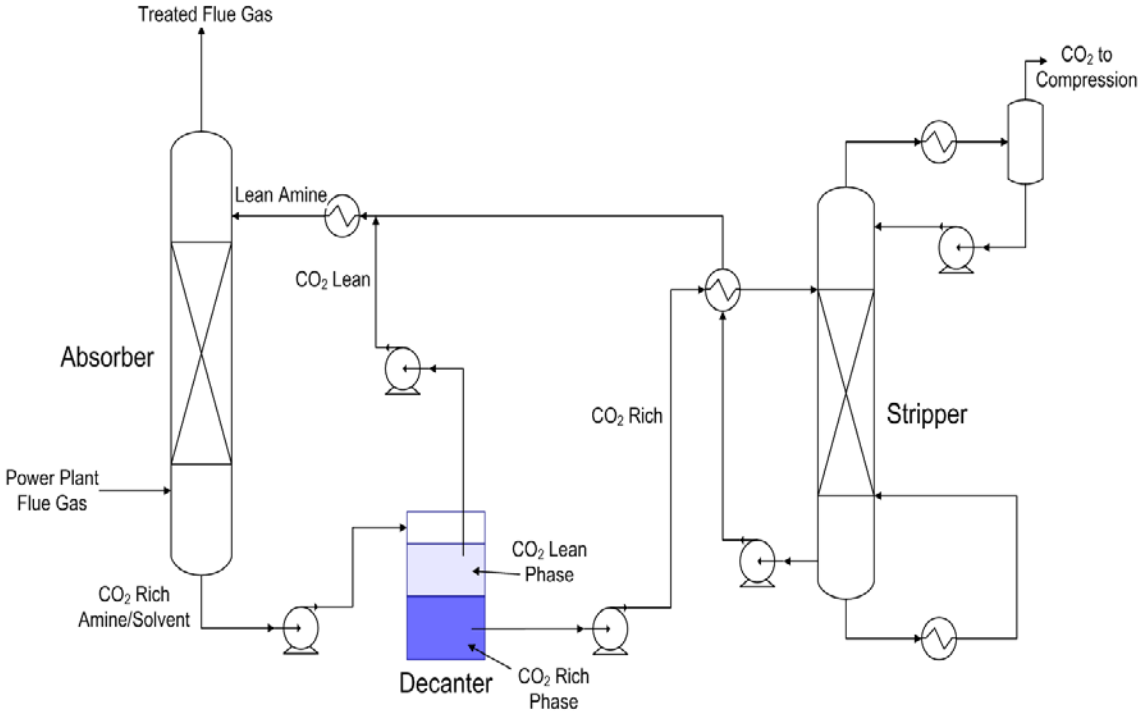

3H Self-Concentrating Absorbent Technology – Past Work

- *The concept has been demonstrated in the laboratory for a number of absorbent/solvent pairs*
- *Work was previously funded under the DOE SBIR and HBCU Programs, focusing on:*
  - *Laboratory identification/design/evaluation of different absorbent/solvent combinations*
  - *Bench-scale laboratory screening and measurement of*
    - *CO_2 absorption rates*
    - *CO_2 loading capacity*
    - *Ability to regenerate CO_2 from the CO_2-rich phase*

Major Bench Scale Apparatus Used in Laboratory Screening

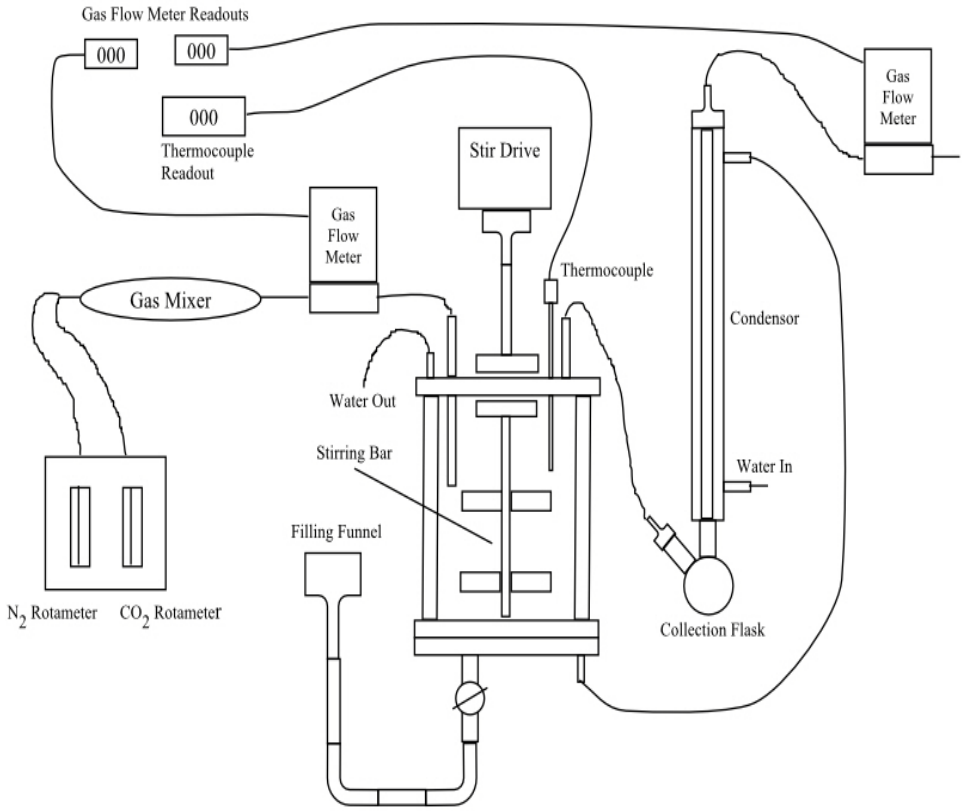

CO_2 Absorption Rate Measurement

Self Concentrating Absorbent/Solvent has High CO_2 Absorption Rate

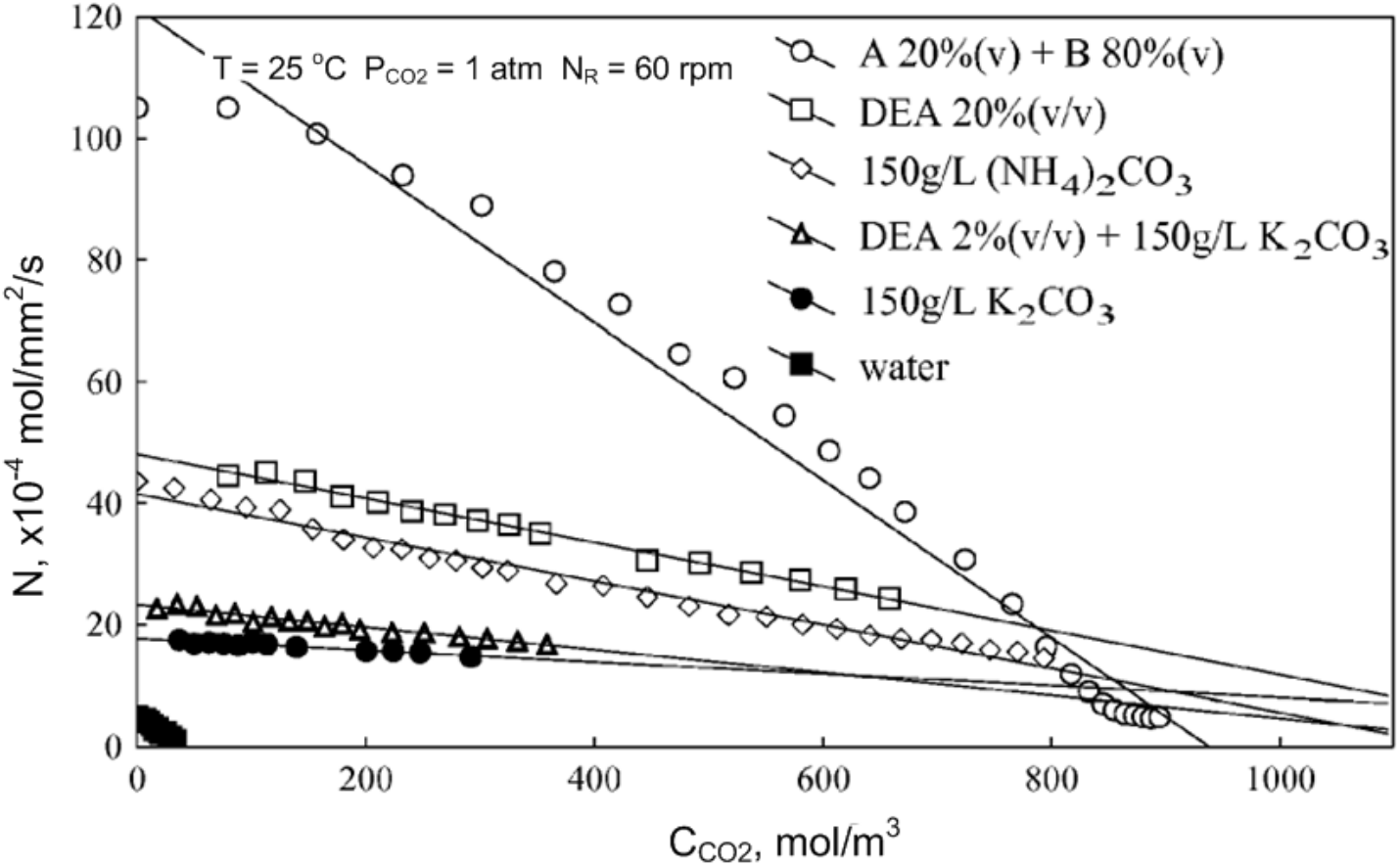

CO_2 Absorption Rate Measurement

Comparison with a MEA Aqueous Solvent at Similar Concentration

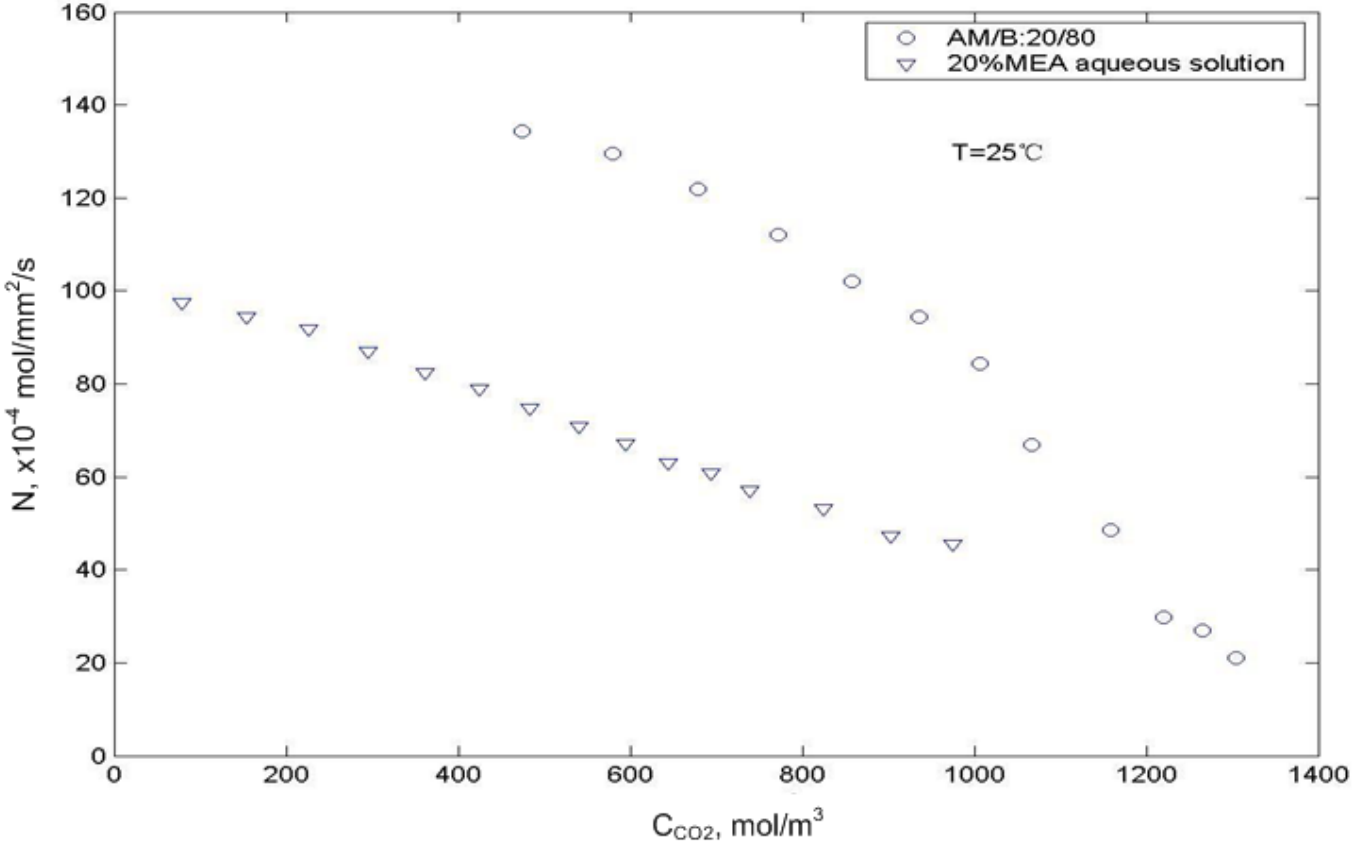

CO_2 Absorption Rate Measurement

Absorption Rate at Different Absorbent Concentration

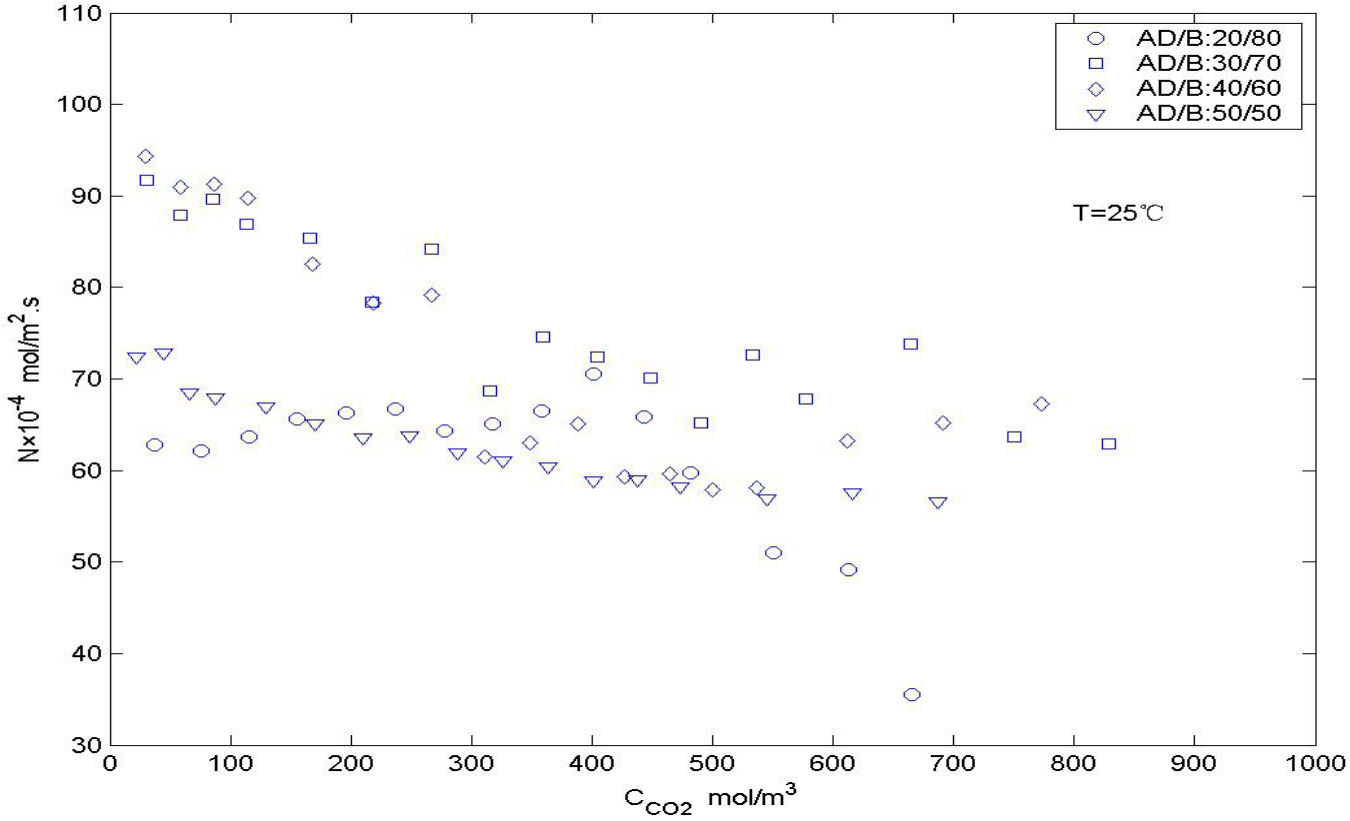

CO_2 Regeneration

Regeneration of the Concentrated CO_2 Rich Phase Occurs at Relatively Low Temperature

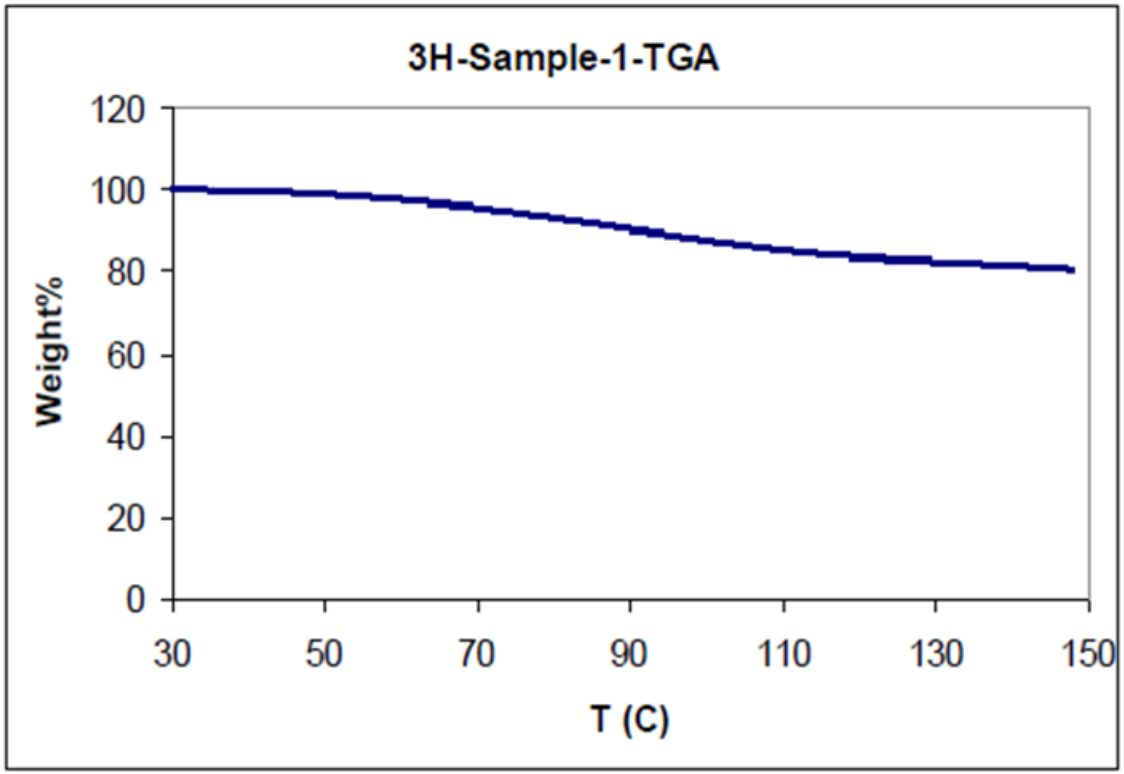

CO_2 Regeneration

Regeneration Rate of CO_2 Rich Phase at Different Temperature

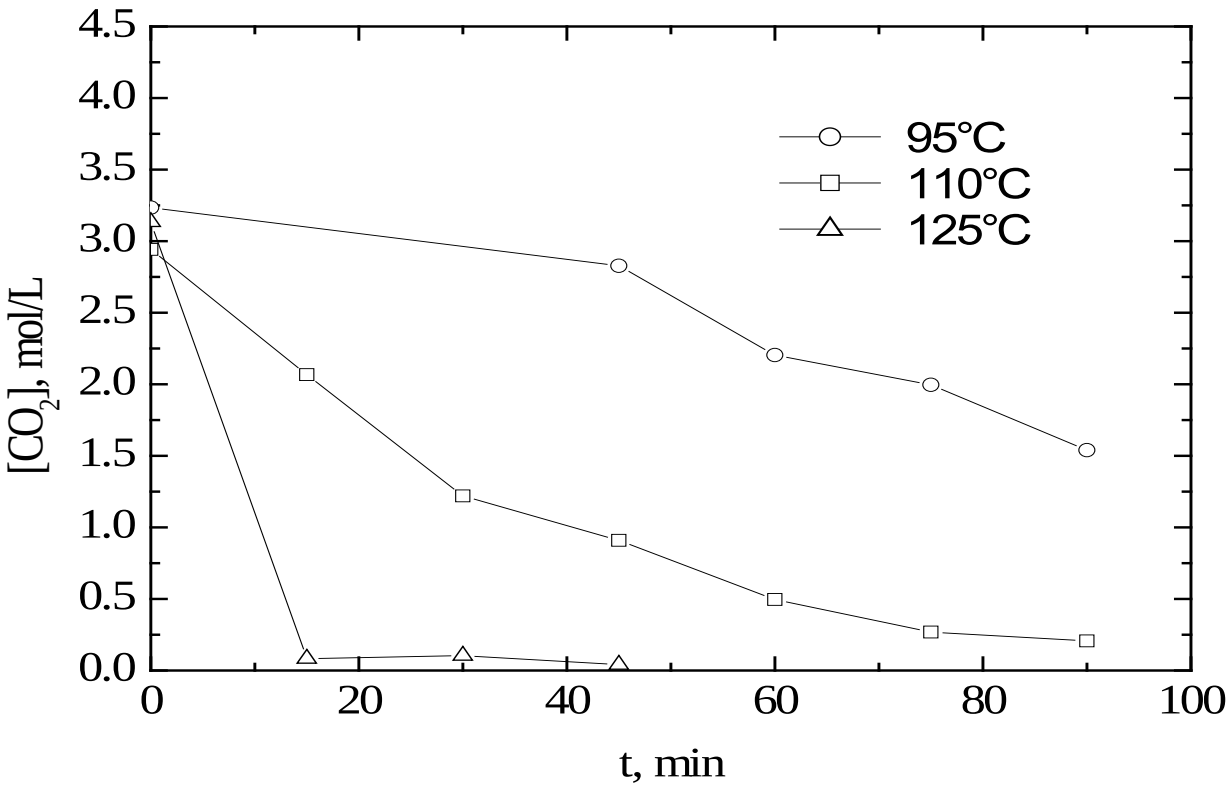

Current Project Objectives

- *Continue laboratory evaluation/measurement to demonstrate the viability of the 3H CO_2 capture process and to collect needed data*
- *Design, construct and operate a bench-scale absorber/regenerator column system to demonstrate the concept, and collect design data*
- *Perform engineering system analysis, preliminary design and techno-economic evaluation of the process*

Project Scope of Work

		Phase I (Budget Period 1)						Phase II (Budget Period 2)					
		Apr-11	Jul-11	Oct-11	Jan-12	Apr-12	Jul-12	Oct-12	Jan-13	Apr-13	Jul-13	Oct-13	Jan-14
Task 1 - PROJECT MANAGEMENT		Kick-off Meeting											
1.1	Finalize Project Management Plan												
1.2	Reports per Federal Assistance Checklist												
1.3	Final Project Report												
TASK 2 - LABORATORY BENCH-SCALE SCREENING, PROPERTY MEASUREMENT AND TESTING													
Task 2.1	**Assess current technolgy status & experimental data**												
Task 2.2	**Conduct additional lab work to identify four (4) absorbent/solvent combinations**												
2.2.1	CO2 absorption rate & rich CO2 loading measurements												
2.2.2	CO2 regeneration rate & lean CO2 loading measuremets												
2.2.3	Characterization of the phase-separated 'dense CO2 amine/solvent'												
2.2.4	Physical property measurements of the the amine/solvent pairs												
2. 2.5	VLE measurements of same amine/solvents pairs												
2.2.6	Thermal degradation evaluation of amine/solvent pairs										Long Term Testing Required		
2.2.7	Chemical (SOx, NOx) degradation measurements of amine/solvent pairs										Long Term Testing Required		
2.2.8	Oxygen degradation measurement of amine/solvent paris										Long Term Testing Required		
Task 2 Technical Report								Task 2 Report					

Project Scope of Work

		Phase I (Budget Period 1)						Phase II (Budget Period 2)					
		Apr-11	Jul-11	Oct-11	Jan-12	Apr-12	Jul-12	Oct-12	Jan-13	Apr-13	Jul-13	Oct-13	Jan-14
Task 1 - PROJECT MANAGEMENT			Kick-off Meeting										
TASK 2 - LABORATORY BENCH-SCALE SCREENING, PROPERTY MEASUREMENT AND TESTING													
TASK 3 - PROCESS MECHANISTICS AND MODELING EVALUATION													
3.1	Development of understanding of the concept chemistry and reactions based on results of Task 1 & 2												
3.2	Measuremets of fundamental kinetic rate and mass transfer (e.g., wetted-wall column)												
3.3	Development of simulation modeling to gain fundamental insight into the process												
Task 3 Technical Report											Task 3 report		
TASK 4 - BENCH SCALE COLUMN ABSORPTION AND REGENERATION TESTING													
4.1	Design of a bench-scale absorber/regenerator column system												
4.2	Construction of a bench-scale absorber/regenerator column system												
4.3	Demonstration testing of the proposed concept under 'dynamic multi-contact' column tesing												
Task 4 Technical Report												Task 4 Report	

Project Scope of Work

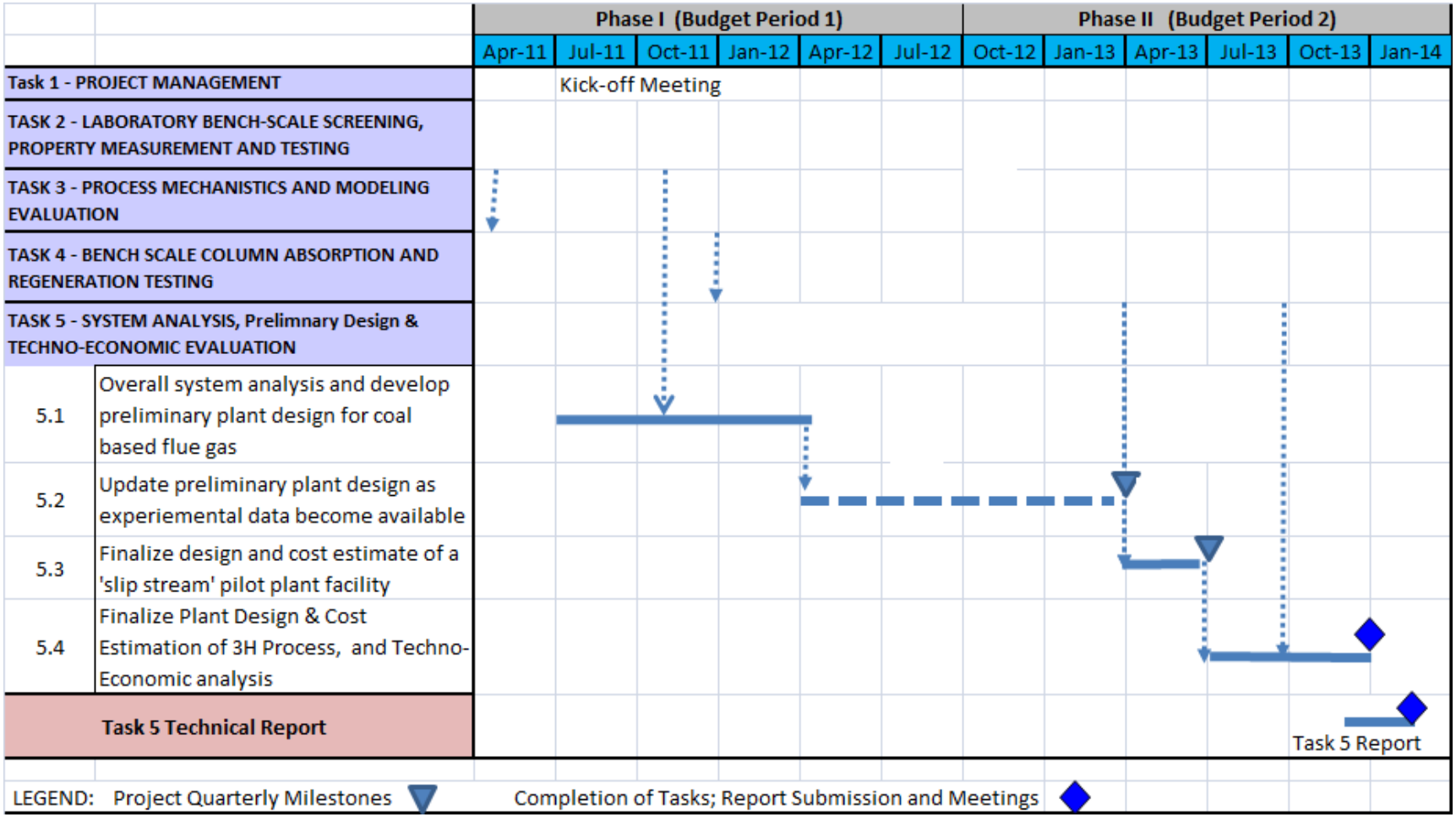

Current Status

- *Task 1 – Project Management*
  - *Contract executed in April 2011*
  - *KO meetings for project team and DOE held in April and May respectively*
  - *Project Management Plan (PMP) completed and submitted to DOE*
- *Task 2 – Laboratory Bench Scale Screening, Property Measurement and Testing*
  - *Continued to review the 3H's technology status and evaluate its experimental data*
  - *Fabricated a small bench-scale column and demonstrated the concept under simulated absorber conditions*

Bench-Scale Test Simulator

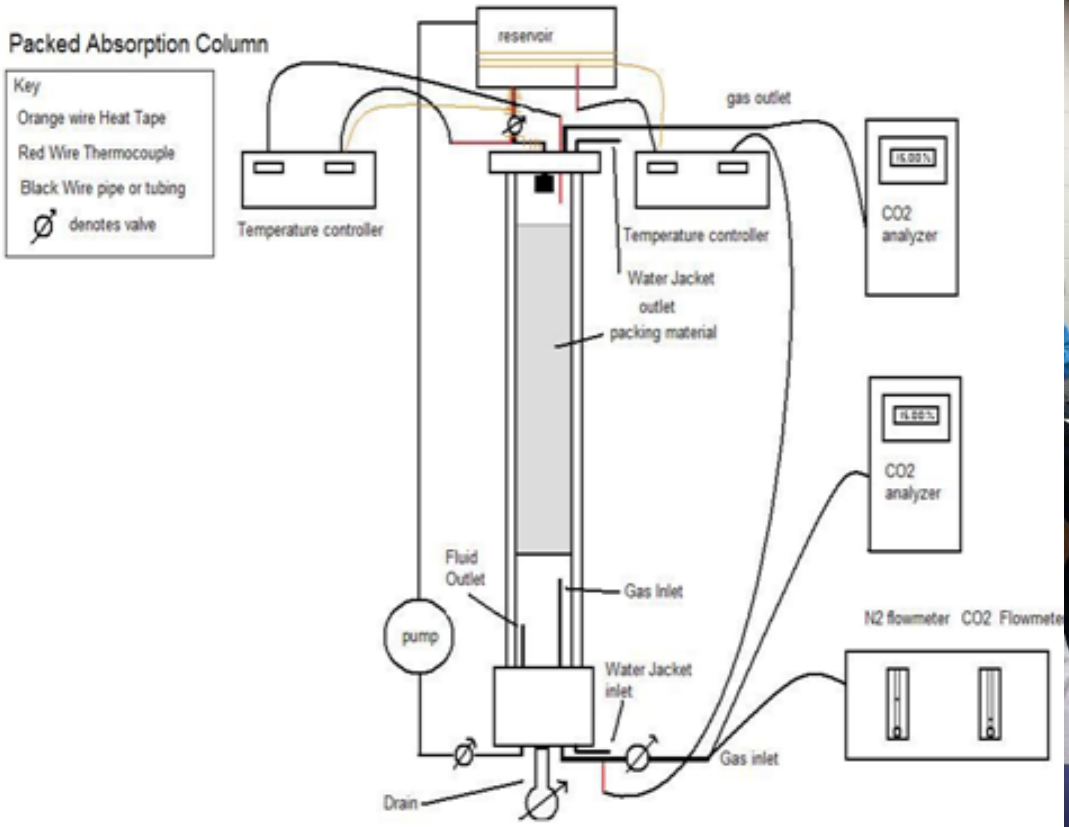

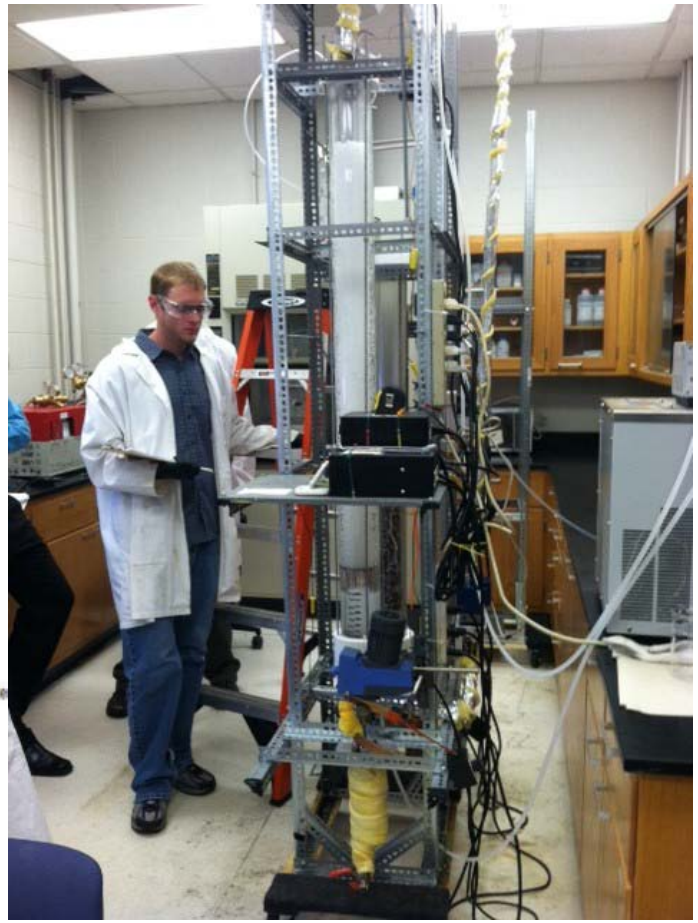

Bench-Scale Test Simulator

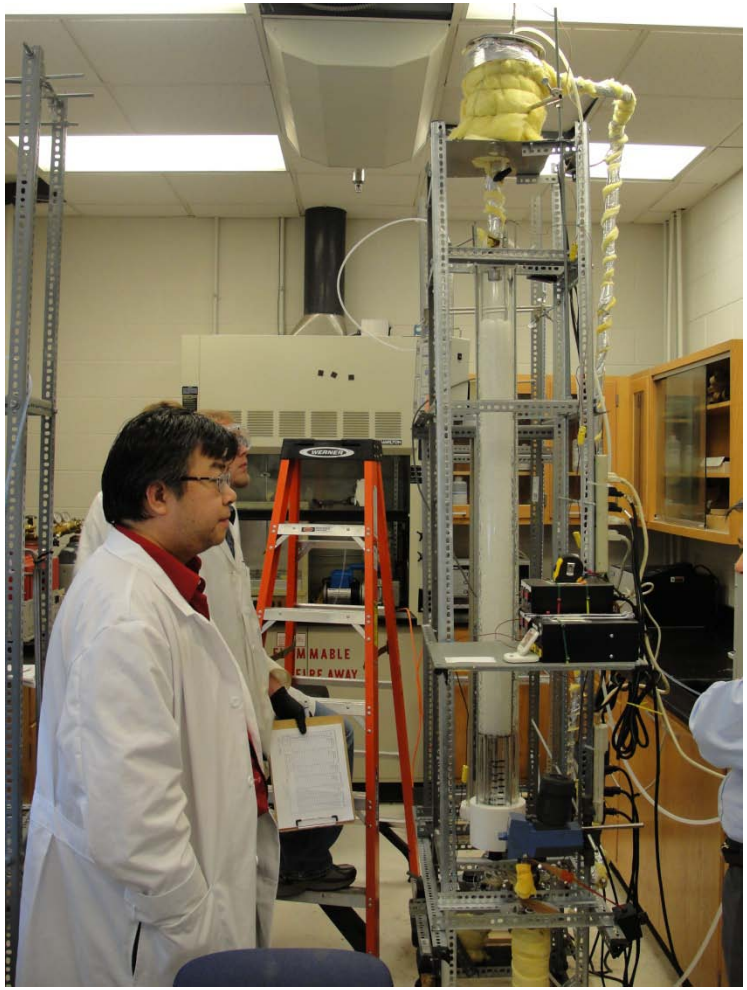

A recent demonstration run at 3H laboratory using the bench-scale column simulator

Moving Forward – Near Term Plans

- *Task 2 – Laboratory Bench Scale Screening, Property Measurement and Testing*
  - *Complete 3H's technology assessment to identify two to four promising absorbent/solvent pairs*
  - *Carry out a more detailed and systematic characterization and property measurements on at least one absorbent/solvent pair for design study*
  - *Bench scale laboratory measurements to include:*
    - *CO_2 absorption rate at simulated power plant flue gas conditions*
    - *Regeneration rate and requirement*
    - *Rich and lean CO_2 loading capacity*
    - *VLE properties*
    - *Chemical and physical properties*

Moving Forward –

- *Stay tuned – project has just started*

Acknowledgment

3H is appreciative to the DOE, LG&E and KU Energy LLC, and EPRI for funding this project. Special thanks go to

- *Mike Mosser (NETL Project Manager)*
- *John Moffett (LG&E and KU)*
- *David Link (LG&E and KU)*
- *Brice Freeman (EPRI)*

for their technical guidance

Questions ??